Full wwPDB X-ray Structure Validation Report (i)

Oct 8, 2023 – 08:09 PM EDT

PDB ID	:	6WKB
Title	:	Human S-adenosylmethionine synthetase co-crystallized with UppNHp and Met
Authors	:	Tan, L.L.; Jackson, C.J.
Deposited on	:	2020-04-15
Resolution	:	2.55 Å(reported)

This is a Full wwPDB X-ray Structure Validation Report for a publicly released PDB entry.

We welcome your comments at *validation@mail.wwpdb.org*
A user guide is available at
https://www.wwpdb.org/validation/2017/XrayValidationReportHelp
with specific help available everywhere you see the (i) symbol.

The types of validation reports are described at
http://www.wwpdb.org/validation/2017/FAQs#types.

The following versions of software and data (see references (i)) were used in the production of this report:

MolProbity	:	4.02b-467
Mogul	:	1.8.5 (274361), CSD as541be (2020)
Xtriage (Phenix)	:	1.13
EDS	:	2.35.1
Percentile statistics	:	20191225.v01 (using entries in the PDB archive December 25th 2019)
Refmac	:	5.8.0158
CCP4	:	7.0.044 (Gargrove)
Ideal geometry (proteins)	:	Engh & Huber (2001)
Ideal geometry (DNA, RNA)	:	Parkinson et al. (1996)
Validation Pipeline (wwPDB-VP)	:	2.35.1

1 Overall quality at a glance (i)

The following experimental techniques were used to determine the structure:
X-RAY DIFFRACTION

The reported resolution of this entry is 2.55 Å.

Percentile scores (ranging between 0-100) for global validation metrics of the entry are shown in the following graphic. The table shows the number of entries on which the scores are based.

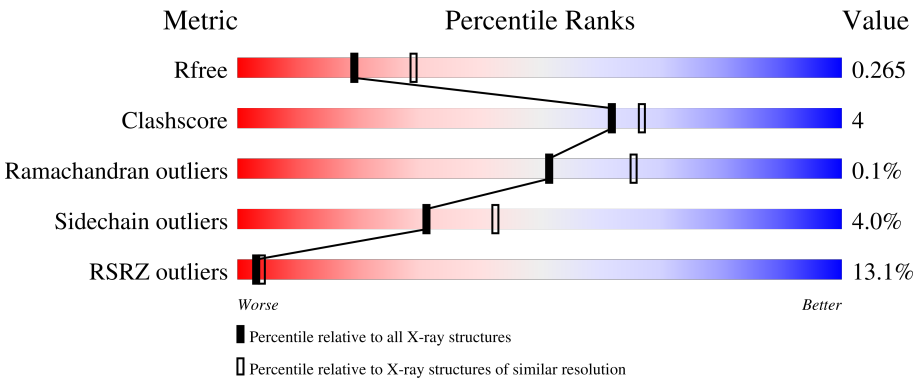

Metric	Whole archive (#Entries)	Similar resolution (#Entries, resolution range(Å))
R_{free}	130704	1284 (2.56-2.52)
Clashscore	141614	1332 (2.56-2.52)
Ramachandran outliers	138981	1315 (2.56-2.52)
Sidechain outliers	138945	1315 (2.56-2.52)
RSRZ outliers	127900	1272 (2.56-2.52)

The table below summarises the geometric issues observed across the polymeric chains and their fit to the electron density. The red, orange, yellow and green segments of the lower bar indicate the fraction of residues that contain outliers for >=3, 2, 1 and 0 types of geometric quality criteria respectively. A grey segment represents the fraction of residues that are not modelled. The numeric value for each fraction is indicated below the corresponding segment, with a dot representing fractions <=5% The upper red bar (where present) indicates the fraction of residues that have poor fit to the electron density. The numeric value is given above the bar.

Mol	Chain	Length	Quality of chain
1	A	395	12% 84% 12% • •
1	B	395	14% 83% 11% • •

The following table lists non-polymeric compounds, carbohydrate monomers and non-standard residues in protein, DNA, RNA chains that are outliers for geometric or electron-density-fit criteria:

Mol	Type	Chain	Res	Chirality	Geometry	Clashes	Electron density
5	MET	B	502[B]	-	-	-	X

2 Entry composition (i)

There are 6 unique types of molecules in this entry. The entry contains 6146 atoms, of which 0 are hydrogens and 0 are deuteriums.

In the tables below, the ZeroOcc column contains the number of atoms modelled with zero occupancy, the AltConf column contains the number of residues with at least one atom in alternate conformation and the Trace column contains the number of residues modelled with at most 2 atoms.

- Molecule 1 is a protein called S-adenosylmethionine synthase isoform type-2.

Mol	Chain	Residues	Atoms					ZeroOcc	AltConf	Trace
			Total	C	N	O	S			
1	A	381	2963	1872	518	562	11	0	0	0
1	B	380	3101	1956	543	590	12	0	19	0

- Molecule 2 is 5'-deoxyuridine (three-letter code: U4P) (formula: $C_9H_{12}N_2O_5$).

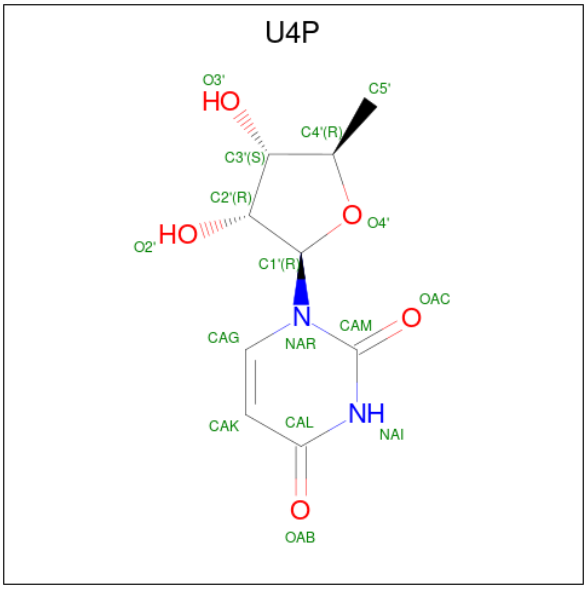

Mol	Chain	Residues	Atoms				ZeroOcc	AltConf
			Total	C	N	O		
2	A	1	16	9	2	5	0	1
2	B	1	16	9	2	5	0	0

- Molecule 3 is D-METHIONINE (three-letter code: MED) (formula: $C_5H_{11}NO_2S$).

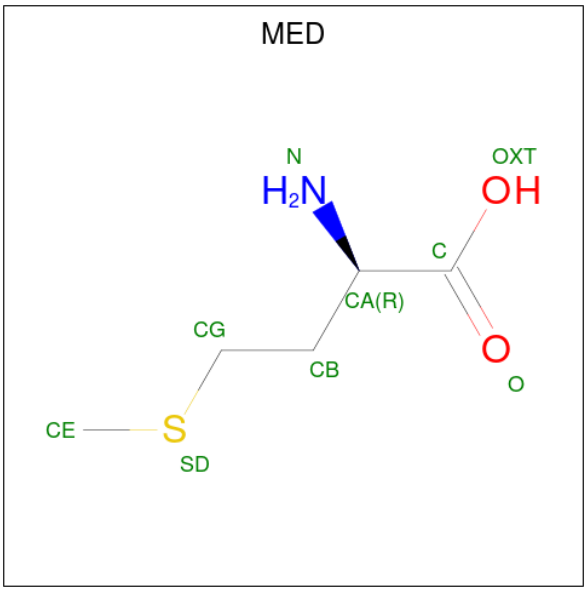

Mol	Chain	Residues	Atoms					ZeroOcc	AltConf
			Total	C	N	O	S		
3	A	1	9	5	1	2	1	0	0

- Molecule 4 is 1,2-ETHANEDIOL (three-letter code: EDO) (formula: $C_2H_6O_2$).

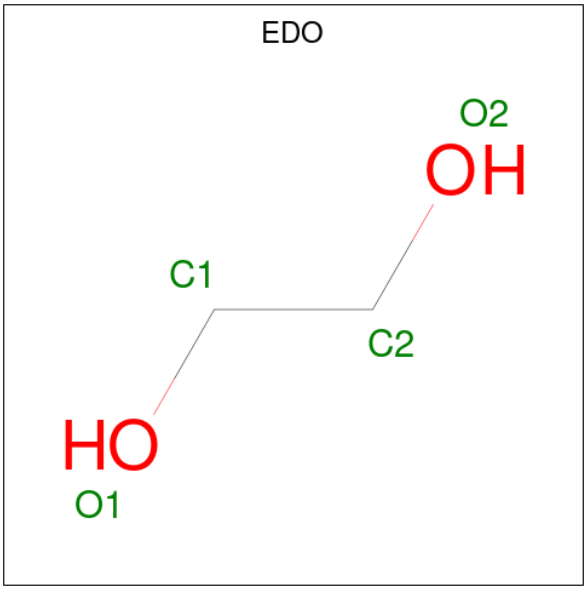

Mol	Chain	Residues	Atoms			ZeroOcc	AltConf
			Total	C	O		
4	B	1	4	2	2	0	0

- Molecule 5 is METHIONINE (three-letter code: MET) (formula: $C_5H_{11}NO_2S$).

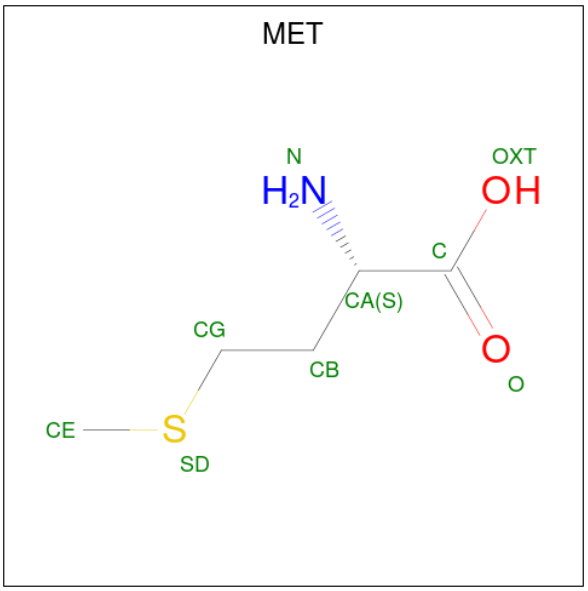

Mol	Chain	Residues	Atoms					ZeroOcc	AltConf
			Total	C	N	O	S		
5	B	1	9	5	1	2	1	0	1

- Molecule 6 is water.

Mol	Chain	Residues	Atoms		ZeroOcc	AltConf
			Total	O		
6	A	7	7	7	0	0
6	B	21	Total	O	0	0
			21	21		

3 Residue-property plots (i)

These plots are drawn for all protein, RNA, DNA and oligosaccharide chains in the entry. The first graphic for a chain summarises the proportions of the various outlier classes displayed in the second graphic. The second graphic shows the sequence view annotated by issues in geometry and electron density. Residues are color-coded according to the number of geometric quality criteria for which they contain at least one outlier: green = 0, yellow = 1, orange = 2 and red = 3 or more. A red dot above a residue indicates a poor fit to the electron density (RSRZ > 2). Stretches of 2 or more consecutive residues without any outlier are shown as a green connector. Residues present in the sample, but not in the model, are shown in grey.

- Molecule 1: S-adenosylmethionine synthase isoform type-2

Chain A:

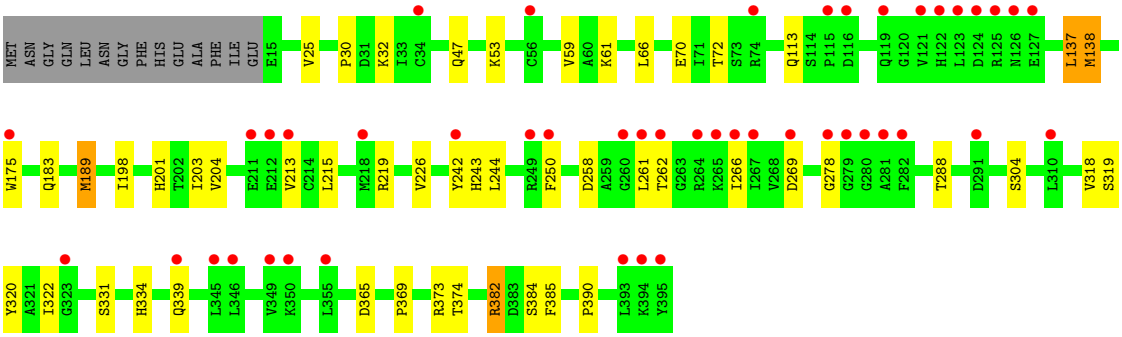

- Molecule 1: S-adenosylmethionine synthase isoform type-2

Chain B:

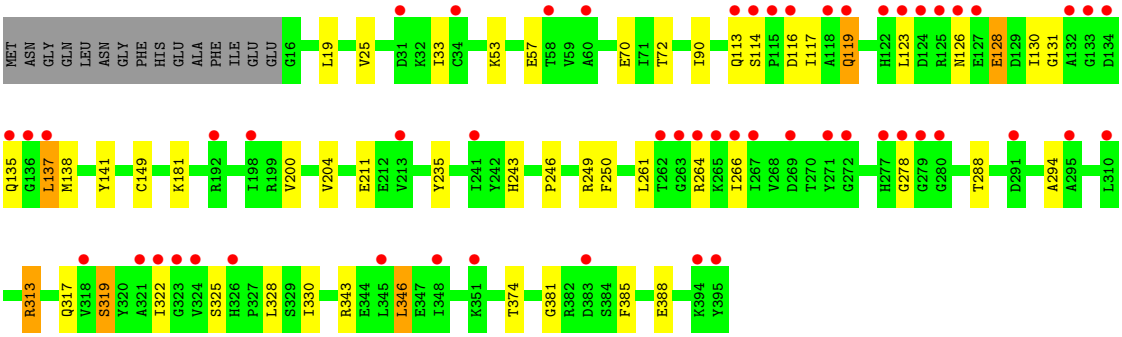

4 Data and refinement statistics (i)

Property	Value	Source
Space group	P 63 2 2	Depositor
Cell constants a, b, c, α, β, γ	144.19Å 144.19Å 188.20Å 90.00° 90.00° 120.00°	Depositor
Resolution (Å)	47.20 – 2.55 47.20 – 2.55	Depositor EDS
% Data completeness (in resolution range)	99.6 (47.20-2.55) 100.0 (47.20-2.55)	Depositor EDS
R_{merge}	(Not available)	Depositor
R_{sym}	(Not available)	Depositor
$< I/\sigma(I) >$ [1]	1.34 (at 2.54Å)	Xtriage
Refinement program	PHENIX (1.17.1_3660: ???)	Depositor
R, R_{free}	0.220 , 0.266 0.220 , 0.265	Depositor DCC
R_{free} test set	1970 reflections (5.15%)	wwPDB-VP
Wilson B-factor (Å^2)	72.1	Xtriage
Anisotropy	0.569	Xtriage
Bulk solvent k_{sol}(e/Å^3), B_{sol}(Å^2)	0.32 , 67.8	EDS
L-test for twinning[2]	$< \|L\| > = 0.49$, $< L^2 > = 0.33$	Xtriage
Estimated twinning fraction	No twinning to report.	Xtriage
F_o,F_c correlation	0.96	EDS
Total number of atoms	6146	wwPDB-VP
Average B, all atoms (Å^2)	104.0	wwPDB-VP

Xtriage's analysis on translational NCS is as follows: *The largest off-origin peak in the Patterson function is 2.84% of the height of the origin peak. No significant pseudotranslation is detected.*

[1]Intensities estimated from amplitudes.

[2]Theoretical values of $< |L| >$, $< L^2 >$ for acentric reflections are 0.5, 0.333 respectively for untwinned datasets, and 0.375, 0.2 for perfectly twinned datasets.

5 Model quality (i)

5.1 Standard geometry (i)

Bond lengths and bond angles in the following residue types are not validated in this section: MED, U4P, EDO

The Z score for a bond length (or angle) is the number of standard deviations the observed value is removed from the expected value. A bond length (or angle) with $|Z| > 5$ is considered an outlier worth inspection. RMSZ is the root-mean-square of all Z scores of the bond lengths (or angles).

Mol	Chain	Bond lengths		Bond angles	
		RMSZ	$\#\|Z\|>5$	RMSZ	$\#\|Z\|>5$
1	A	0.24	0/3022	0.42	0/4088
1	B	0.23	0/3162	0.42	0/4276
All	All	0.23	0/6184	0.42	0/8364

There are no bond length outliers.

There are no bond angle outliers.

There are no chirality outliers.

There are no planarity outliers.

5.2 Too-close contacts (i)

In the following table, the Non-H and H(model) columns list the number of non-hydrogen atoms and hydrogen atoms in the chain respectively. The H(added) column lists the number of hydrogen atoms added and optimized by MolProbity. The Clashes column lists the number of clashes within the asymmetric unit, whereas Symm-Clashes lists symmetry-related clashes.

Mol	Chain	Non-H	H(model)	H(added)	Clashes	Symm-Clashes
1	A	2963	0	2956	28	0
1	B	3101	0	3081	34	0
2	A	16	0	0	2	0
2	B	16	0	0	0	0
3	A	9	0	10	0	0
4	B	4	0	6	0	0
5	B	9	0	8	2	0
6	A	7	0	0	0	0
6	B	21	0	0	0	0
All	All	6146	0	6061	53	0

The all-atom clashscore is defined as the number of clashes found per 1000 atoms (including

hydrogen atoms). The all-atom clashscore for this structure is 4.

All (53) close contacts within the same asymmetric unit are listed below, sorted by their clash magnitude.

Atom-1	Atom-2	Interatomic distance (Å)	Clash overlap (Å)
1:B:72:THR:HG23	1:B:113:GLN:H	1.52	0.74
1:A:72:THR:HG23	1:A:113:GLN:H	1.62	0.64
1:B:200:VAL:HG23	1:B:235:TYR:HB3	1.83	0.60
1:B:53:LYS:HE3	1:B:288:THR:HG21	1.85	0.59
1:B:330:ILE:HB	1:B:346:LEU:HD11	1.85	0.58
1:A:70:GLU:HB3	1:A:113:GLN:HA	1.86	0.57
1:B:211:GLU:OE2	1:B:249:ARG:NH2	2.38	0.57
1:B:25:VAL:HG12	1:B:181:LYS:HG2	1.88	0.55
1:B:131[A]:GLY:HA2	1:B:325:SER:HA	1.89	0.55
1:A:322:ILE:HG23	1:B:246:PRO:HG2	1.89	0.53
1:A:189:MET:HB2	1:A:198:ILE:HD11	1.89	0.52
1:B:119:GLN:HA	1:B:123[B]:LEU:HB2	1.92	0.52
1:A:204:VAL:HG21	1:B:135[A]:GLN:NE2	2.25	0.51
1:A:47:GLN:HG3	1:A:369:PRO:HG3	1.92	0.51
2:A:401[B]:U4P:NAI	1:B:117:ILE:HG12	2.25	0.51
1:A:262:THR:O	1:B:264:ARG:NH1	2.44	0.51
1:A:30:PRO:HG2	1:A:258:ASP:HB3	1.93	0.50
1:B:33:ILE:HG12	1:B:90:ILE:HD13	1.94	0.48
1:B:117:ILE:HD13	5:B:502[B]:MET:HB2	1.95	0.48
1:A:331:SER:OG	1:B:19:LEU:O	2.27	0.48
1:A:266:ILE:HD11	1:B:266:ILE:HD11	1.96	0.47
1:A:137:LEU:O	1:A:278:GLY:HA3	2.14	0.47
1:A:61:LYS:HA	1:A:61:LYS:HD2	1.60	0.46
1:A:53:LYS:HE3	1:A:288:THR:HG21	1.97	0.46
1:B:204:VAL:HG22	1:B:243:HIS:HB2	1.98	0.46
1:B:319:SER:O	1:B:328:LEU:HB3	2.15	0.46
1:A:261:LEU:HD22	1:B:261:LEU:HD22	1.97	0.46
1:A:59:VAL:HB	1:A:66:LEU:HB3	1.98	0.45
1:A:261:LEU:HD11	1:B:57:GLU:HB3	1.98	0.45
1:B:70:GLU:HB3	1:B:113:GLN:HA	1.99	0.44
1:A:215:LEU:HD21	1:A:219:ARG:CZ	2.48	0.44
1:B:126[A]:ASN:O	1:B:128[A]:GLU:N	2.51	0.44
1:A:304:SER:HA	1:A:390:PRO:HB3	2.00	0.44
1:A:203:ILE:HD11	1:A:242:TYR:HE1	1.83	0.43
1:B:374:THR:HG22	1:B:385:PHE:CE1	2.52	0.43
1:B:138[A]:MET:HG2	1:B:294:ALA:HB3	1.99	0.43
1:A:32:LYS:NZ	1:A:269:ASP:OD1	2.49	0.43
1:B:135[B]:GLN:H	1:B:135[B]:GLN:HG3	1.38	0.42

Continued on next page...

Continued from previous page...

Atom-1	Atom-2	Interatomic distance (Å)	Clash overlap (Å)
2:A:401[B]:U4P:OAB	1:B:116:ASP:HB3	2.19	0.42
1:A:201:HIS:CE1	1:B:328:LEU:HD21	2.55	0.42
1:B:137[B]:LEU:HD12	1:B:278:GLY:HA2	2.01	0.41
1:A:373:ARG:O	1:A:382:ARG:NH2	2.53	0.41
1:B:381:GLY:H	1:B:388:GLU:CD	2.24	0.41
1:A:175:TRP:HB3	1:A:213:VAL:HG21	2.02	0.41
1:A:219:ARG:NE	1:A:244:LEU:O	2.53	0.41
1:A:374:THR:HG22	1:A:385:PHE:CZ	2.56	0.41
1:A:203:ILE:HD11	1:A:242:TYR:CE1	2.56	0.40
1:B:123[B]:LEU:HD23	1:B:123[B]:LEU:HA	1.91	0.40
1:B:141:TYR:OH	1:B:313:ARG:HD3	2.21	0.40
1:A:243:HIS:CG	1:B:322:ILE:HD12	2.56	0.40
1:A:138:MET:HE1	1:A:320:TYR:CD1	2.56	0.40
1:B:113:GLN:NE2	5:B:502[B]:MET:O	2.53	0.40
1:B:114:SER:HB3	1:B:117:ILE:HG13	2.03	0.40

There are no symmetry-related clashes.

5.3 Torsion angles (i)

5.3.1 Protein backbone (i)

In the following table, the Percentiles column shows the percent Ramachandran outliers of the chain as a percentile score with respect to all X-ray entries followed by that with respect to entries of similar resolution.

The Analysed column shows the number of residues for which the backbone conformation was analysed, and the total number of residues.

Mol	Chain	Analysed	Favoured	Allowed	Outliers	Percentiles
1	A	379/395 (96%)	357 (94%)	21 (6%)	1 (0%)	41 51
1	B	397/395 (100%)	376 (95%)	21 (5%)	0	100 100
All	All	776/790 (98%)	733 (94%)	42 (5%)	1 (0%)	51 65

All (1) Ramachandran outliers are listed below:

Mol	Chain	Res	Type
1	A	384	SER

5.3.2 Protein sidechains (i)

In the following table, the Percentiles column shows the percent sidechain outliers of the chain as a percentile score with respect to all X-ray entries followed by that with respect to entries of similar resolution.

The Analysed column shows the number of residues for which the sidechain conformation was analysed, and the total number of residues.

Mol	Chain	Analysed	Rotameric	Outliers	Percentiles	
1	A	316/327 (97%)	303 (96%)	13 (4%)	30	41
1	B	330/327 (101%)	316 (96%)	14 (4%)	30	40
All	All	646/654 (99%)	619 (96%)	27 (4%)	31	40

All (27) residues with a non-rotameric sidechain are listed below:

Mol	Chain	Res	Type
1	A	25	VAL
1	A	137	LEU
1	A	138	MET
1	A	183	GLN
1	A	189	MET
1	A	226	VAL
1	A	250	PHE
1	A	318	VAL
1	A	319	SER
1	A	334	HIS
1	A	339	GLN
1	A	365	ASP
1	A	382	ARG
1	B	119	GLN
1	B	128[A]	GLU
1	B	128[B]	GLU
1	B	130[A]	ILE
1	B	130[B]	ILE
1	B	137[A]	LEU
1	B	137[B]	LEU
1	B	149	CYS
1	B	250	PHE
1	B	313	ARG
1	B	317	GLN
1	B	319	SER
1	B	343	ARG
1	B	346	LEU

Sometimes sidechains can be flipped to improve hydrogen bonding and reduce clashes. There are no such sidechains identified.

5.3.3 RNA (i)

There are no RNA molecules in this entry.

5.4 Non-standard residues in protein, DNA, RNA chains (i)

There are no non-standard protein/DNA/RNA residues in this entry.

5.5 Carbohydrates (i)

There are no monosaccharides in this entry.

5.6 Ligand geometry (i)

5 ligands are modelled in this entry.

In the following table, the Counts columns list the number of bonds (or angles) for which Mogul statistics could be retrieved, the number of bonds (or angles) that are observed in the model and the number of bonds (or angles) that are defined in the Chemical Component Dictionary. The Link column lists molecule types, if any, to which the group is linked. The Z score for a bond length (or angle) is the number of standard deviations the observed value is removed from the expected value. A bond length (or angle) with $|Z| > 2$ is considered an outlier worth inspection. RMSZ is the root-mean-square of all Z scores of the bond lengths (or angles).

Mol	Type	Chain	Res	Link	Bond lengths			Bond angles		
					Counts	RMSZ	$\#\|Z\| > 2$	Counts	RMSZ	$\#\|Z\| > 2$
2	U4P	A	401[B]	5	17,17,17	4.25	11 (64%)	22,25,25	2.33	7 (31%)
2	U4P	B	503	3	17,17,17	4.25	10 (58%)	22,25,25	2.20	8 (36%)
3	MED	A	402	2	7,8,8	1.05	0	7,9,9	1.38	1 (14%)
5	MET	B	502[B]	2	7,8,8	1.06	0	7,9,9	1.44	1 (14%)
4	EDO	B	501	-	3,3,3	0.46	0	2,2,2	0.33	0

In the following table, the Chirals column lists the number of chiral outliers, the number of chiral centers analysed, the number of these observed in the model and the number defined in the Chemical Component Dictionary. Similar counts are reported in the Torsion and Rings columns. '-' means no outliers of that kind were identified.

Mol	Type	Chain	Res	Link	Chirals	Torsions	Rings
2	U4P	A	401[B]	5	-	4/4/20/20	0/2/2/2
2	U4P	B	503	3	-	4/4/20/20	0/2/2/2
3	MED	A	402	2	-	7/8/8/8	-
5	MET	B	502[B]	2	-	3/8/8/8	-
4	EDO	B	501	-	-	0/1/1/1	-

All (21) bond length outliers are listed below:

Mol	Chain	Res	Type	Atoms	Z	Observed(Å)	Ideal(Å)
2	B	503	U4P	OAC-CAM	9.71	1.40	1.23
2	A	401[B]	U4P	OAC-CAM	9.70	1.40	1.23
2	B	503	U4P	OAB-CAL	8.59	1.41	1.24
2	A	401[B]	U4P	OAB-CAL	8.47	1.41	1.24
2	B	503	U4P	O4'-C1'	6.64	1.57	1.42
2	A	401[B]	U4P	O4'-C1'	6.35	1.57	1.42
2	B	503	U4P	CAM-NAI	4.44	1.45	1.38
2	A	401[B]	U4P	CAM-NAI	4.36	1.45	1.38
2	A	401[B]	U4P	C3'-C4'	-4.16	1.46	1.52
2	A	401[B]	U4P	C2'-C3'	-3.97	1.42	1.53
2	A	401[B]	U4P	O4'-C4'	3.80	1.55	1.44
2	B	503	U4P	C3'-C4'	-3.80	1.47	1.52
2	B	503	U4P	C2'-C3'	-3.71	1.43	1.53
2	B	503	U4P	O4'-C4'	3.69	1.55	1.44
2	B	503	U4P	O2'-C2'	2.72	1.49	1.43
2	A	401[B]	U4P	O2'-C2'	2.70	1.49	1.43
2	B	503	U4P	CAG-CAK	2.59	1.41	1.35
2	A	401[B]	U4P	CAG-CAK	2.54	1.40	1.35
2	B	503	U4P	O3'-C3'	2.08	1.47	1.43
2	A	401[B]	U4P	O3'-C3'	2.07	1.47	1.43
2	A	401[B]	U4P	C1'-NAR	-2.04	1.41	1.47

All (17) bond angle outliers are listed below:

Mol	Chain	Res	Type	Atoms	Z	Observed(^{o})	Ideal(^{o})
2	A	401[B]	U4P	C5'-C4'-C3'	-5.66	109.76	115.70
2	A	401[B]	U4P	CAL-NAI-CAM	-4.35	120.85	126.58
2	B	503	U4P	CAL-NAI-CAM	-4.15	121.10	126.58
2	B	503	U4P	C5'-C4'-C3'	-4.12	111.37	115.70
2	B	503	U4P	C1'-NAR-CAM	3.88	124.60	117.57
2	A	401[B]	U4P	OAB-CAL-CAK	-3.42	119.15	125.16
2	B	503	U4P	NAI-CAM-NAR	3.36	119.36	114.89
2	A	401[B]	U4P	NAI-CAM-NAR	3.34	119.33	114.89

Continued on next page...

Continued from previous page...

Mol	Chain	Res	Type	Atoms	Z	Observed(^{o})	Ideal(^{o})
2	A	401[B]	U4P	CAK-CAL-NAI	3.34	119.83	114.84
2	A	401[B]	U4P	C3'-C2'-C1'	3.29	107.68	101.43
2	B	503	U4P	C3'-C2'-C1'	3.29	107.67	101.43
2	B	503	U4P	CAK-CAL-NAI	3.27	119.73	114.84
2	A	401[B]	U4P	C1'-NAR-CAM	3.26	123.47	117.57
2	B	503	U4P	OAB-CAL-CAK	-2.91	120.04	125.16
5	B	502[B]	MET	CE-SD-CG	2.44	108.80	100.40
3	A	402	MED	CE-SD-CG	2.32	108.36	100.40
2	B	503	U4P	OAC-CAM-NAI	-2.08	117.63	121.50

There are no chirality outliers.

All (18) torsion outliers are listed below:

Mol	Chain	Res	Type	Atoms
3	A	402	MED	O-C-CA-N
3	A	402	MED	CA-CB-CG-SD
5	B	502[B]	MET	N-CA-CB-CG
3	A	402	MED	OXT-C-CA-N
3	A	402	MED	CB-CG-SD-CE
3	A	402	MED	O-C-CA-CB
3	A	402	MED	OXT-C-CA-CB
2	B	503	U4P	C2'-C1'-NAR-CAM
5	B	502[B]	MET	CB-CG-SD-CE
2	B	503	U4P	C2'-C1'-NAR-CAG
2	B	503	U4P	O4'-C1'-NAR-CAG
5	B	502[B]	MET	C-CA-CB-CG
2	B	503	U4P	O4'-C1'-NAR-CAM
2	A	401[B]	U4P	O4'-C1'-NAR-CAG
2	A	401[B]	U4P	C2'-C1'-NAR-CAG
3	A	402	MED	N-CA-CB-CG
2	A	401[B]	U4P	C2'-C1'-NAR-CAM
2	A	401[B]	U4P	O4'-C1'-NAR-CAM

There are no ring outliers.

2 monomers are involved in 4 short contacts:

Mol	Chain	Res	Type	Clashes	Symm-Clashes
2	A	401[B]	U4P	2	0
5	B	502[B]	MET	2	0

5.7 Other polymers (i)

There are no such residues in this entry.

5.8 Polymer linkage issues (i)

There are no chain breaks in this entry.

6 Fit of model and data (i)

6.1 Protein, DNA and RNA chains (i)

In the following table, the column labelled '#RSRZ> 2' contains the number (and percentage) of RSRZ outliers, followed by percent RSRZ outliers for the chain as percentile scores relative to all X-ray entries and entries of similar resolution. The OWAB column contains the minimum, median, 95th percentile and maximum values of the occupancy-weighted average B-factor per residue. The column labelled 'Q< 0.9' lists the number of (and percentage) of residues with an average occupancy less than 0.9.

Mol	Chain	Analysed	<RSRZ>	#RSRZ>2			OWAB(Å^2)	Q<0.9
1	A	381/395 (96%)	0.65	46 (12%)	4	5	68, 101, 149, 184	0
1	B	380/395 (96%)	0.84	54 (14%)	2	3	67, 95, 151, 211	0
All	All	761/790 (96%)	0.75	100 (13%)	3	4	67, 98, 150, 211	0

All (100) RSRZ outliers are listed below:

Mol	Chain	Res	Type	RSRZ
1	B	118	ALA	7.1
1	B	133[A]	GLY	6.9
1	B	115	PRO	6.9
1	B	122[A]	HIS	6.8
1	B	124[A]	ASP	6.0
1	A	278	GLY	5.6
1	B	279	GLY	5.3
1	B	119	GLN	4.9
1	B	132[A]	ALA	4.9
1	B	116	ASP	4.9
1	B	123[A]	LEU	4.8
1	A	125	ARG	4.7
1	B	324	VAL	4.7
1	B	136[A]	GLY	4.6
1	B	114	SER	4.6
1	A	123	LEU	4.6
1	B	113	GLN	4.6
1	B	318	VAL	4.6
1	B	321	ALA	4.5
1	A	213	VAL	4.4
1	A	250	PHE	4.4
1	B	323	GLY	4.2
1	B	322	ILE	4.2
1	A	218	MET	4.0

Continued on next page...

Continued from previous page...

Mol	Chain	Res	Type	RSRZ
1	B	345	LEU	3.8
1	A	242	TYR	3.8
1	B	267	ILE	3.7
1	B	135[A]	GLN	3.6
1	B	266	ILE	3.6
1	A	126	ASN	3.6
1	A	355	LEU	3.6
1	B	263	GLY	3.5
1	A	349	VAL	3.5
1	B	278	GLY	3.5
1	B	348	ILE	3.5
1	A	124	ASP	3.4
1	A	122	HIS	3.4
1	B	125[A]	ARG	3.4
1	A	261	LEU	3.3
1	B	395	TYR	3.3
1	B	134[A]	ASP	3.3
1	B	137[A]	LEU	3.3
1	B	280	GLY	3.2
1	A	279	GLY	3.2
1	A	395	TYR	3.2
1	A	350	LYS	3.2
1	B	277	HIS	3.1
1	A	121	VAL	3.1
1	A	266	ILE	3.0
1	B	213	VAL	2.9
1	A	212	GLU	2.9
1	B	326	HIS	2.9
1	A	265	LYS	2.8
1	A	291	ASP	2.8
1	A	267	ILE	2.8
1	A	116	ASP	2.7
1	B	262	THR	2.7
1	B	310	LEU	2.7
1	A	262	THR	2.7
1	A	175	TRP	2.6
1	A	115	PRO	2.6
1	A	339	GLN	2.6
1	A	74	ARG	2.6
1	A	281	ALA	2.6
1	A	393	LEU	2.6
1	A	280	GLY	2.5

Continued on next page...

Continued from previous page...

Mol	Chain	Res	Type	RSRZ
1	B	264	ARG	2.5
1	B	394	LYS	2.5
1	A	345	LEU	2.5
1	B	127[A]	GLU	2.5
1	B	269	ASP	2.4
1	B	295	ALA	2.4
1	A	211	GLU	2.4
1	A	127	GLU	2.4
1	A	264	ARG	2.4
1	A	34	CYS	2.4
1	B	192	ARG	2.3
1	A	56	CYS	2.3
1	B	198	ILE	2.3
1	B	60	ALA	2.3
1	B	31	ASP	2.3
1	A	394	LYS	2.3
1	B	272	GLY	2.3
1	B	58	THR	2.3
1	B	271	TYR	2.2
1	A	260	GLY	2.2
1	A	282	PHE	2.2
1	A	346	LEU	2.2
1	B	126[A]	ASN	2.1
1	B	241	ILE	2.1
1	B	291	ASP	2.1
1	B	383	ASP	2.1
1	A	323	GLY	2.1
1	B	265	LYS	2.1
1	B	351	LYS	2.0
1	A	249	ARG	2.0
1	A	310	LEU	2.0
1	A	269	ASP	2.0
1	A	119	GLN	2.0
1	B	34	CYS	2.0

6.2 Non-standard residues in protein, DNA, RNA chains (i)

There are no non-standard protein/DNA/RNA residues in this entry.

6.3 Carbohydrates (i)

There are no monosaccharides in this entry.

6.4 Ligands (i)

In the following table, the Atoms column lists the number of modelled atoms in the group and the number defined in the chemical component dictionary. The B-factors column lists the minimum, median, 95th percentile and maximum values of B factors of atoms in the group. The column labelled 'Q< 0.9' lists the number of atoms with occupancy less than 0.9.

Mol	Type	Chain	Res	Atoms	RSCC	RSR	B-factors(Å^2)	Q<0.9
2	U4P	A	401[B]	16/16	0.71	0.38	114,119,125,127	16
4	EDO	B	501	4/4	0.74	0.14	97,105,116,117	0
5	MET	B	502[B]	9/9	0.74	0.43	93,104,127,129	9
2	U4P	B	503	16/16	0.84	0.19	88,99,114,118	16
3	MED	A	402	9/9	0.92	0.21	110,112,116,118	9

6.5 Other polymers (i)

There are no such residues in this entry.