Full wwPDB X-ray Structure Validation Report (i)

Feb 10, 2024 – 03:14 PM EST

PDB ID	:	2RKA
Title	:	The Structure of rat cytosolic PEPCK in complex with phosphoglycolate
Authors	:	Sullivan, S.M.; Stiffin, R.M.; Carlson, G.M.; Holyoak, T.
Deposited on	:	2007-10-16
Resolution	:	1.95 Å(reported)

This is a Full wwPDB X-ray Structure Validation Report for a publicly released PDB entry.

We welcome your comments at *validation@mail.wwpdb.org*
A user guide is available at
https://www.wwpdb.org/validation/2017/XrayValidationReportHelp
with specific help available everywhere you see the (i) symbol.

The types of validation reports are described at
http://www.wwpdb.org/validation/2017/FAQs#types.

The following versions of software and data (see references (i)) were used in the production of this report:

MolProbity	:	4.02b-467
Mogul	:	1.8.5 (274361), CSD as541be (2020)
Xtriage (Phenix)	:	1.13
EDS	:	2.36
Percentile statistics	:	20191225.v01 (using entries in the PDB archive December 25th 2019)
Refmac	:	5.8.0158
CCP4	:	7.0.044 (Gargrove)
Ideal geometry (proteins)	:	Engh & Huber (2001)
Ideal geometry (DNA, RNA)	:	Parkinson et al. (1996)
Validation Pipeline (wwPDB-VP)	:	2.36

1 Overall quality at a glance (i)

The following experimental techniques were used to determine the structure:
X-RAY DIFFRACTION

The reported resolution of this entry is 1.95 Å.

Percentile scores (ranging between 0-100) for global validation metrics of the entry are shown in the following graphic. The table shows the number of entries on which the scores are based.

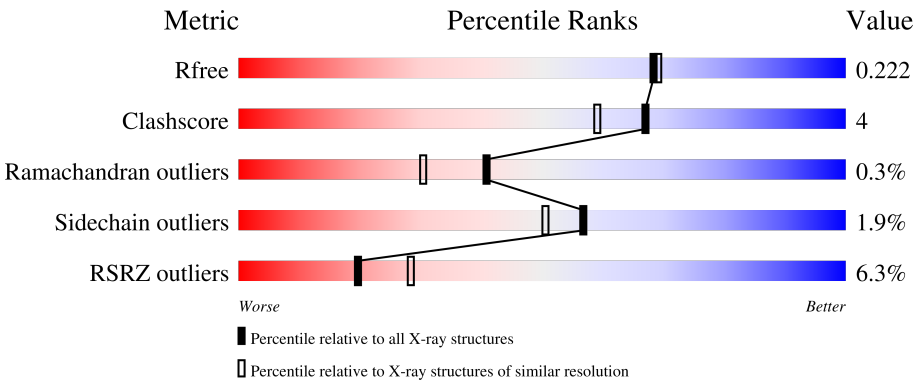

Metric	Whole archive (#Entries)	Similar resolution (#Entries, resolution range(Å))
R_{free}	130704	2580 (1.96-1.96)
Clashscore	141614	2705 (1.96-1.96)
Ramachandran outliers	138981	2678 (1.96-1.96)
Sidechain outliers	138945	2678 (1.96-1.96)
RSRZ outliers	127900	2539 (1.96-1.96)

The table below summarises the geometric issues observed across the polymeric chains and their fit to the electron density. The red, orange, yellow and green segments of the lower bar indicate the fraction of residues that contain outliers for >=3, 2, 1 and 0 types of geometric quality criteria respectively. A grey segment represents the fraction of residues that are not modelled. The numeric value for each fraction is indicated below the corresponding segment, with a dot representing fractions <=5% The upper red bar (where present) indicates the fraction of residues that have poor fit to the electron density. The numeric value is given above the bar.

Mol	Chain	Length	Quality of chain
1	A	624	6% 89% 9% •
1	C	624	7% 86% 12% •

2 Entry composition (i)

There are 5 unique types of molecules in this entry. The entry contains 11081 atoms, of which 0 are hydrogens and 0 are deuteriums.

In the tables below, the ZeroOcc column contains the number of atoms modelled with zero occupancy, the AltConf column contains the number of residues with at least one atom in alternate conformation and the Trace column contains the number of residues modelled with at most 2 atoms.

- Molecule 1 is a protein called Phosphoenolpyruvate carboxykinase, cytosolic [GTP].

Mol	Chain	Residues	Atoms					ZeroOcc	AltConf	Trace
			Total	C	N	O	S			
1	A	611	4992	3209	848	902	33	0	32	0
1	C	614	5029	3226	863	906	34	0	31	0

There are 4 discrepancies between the modelled and reference sequences:

Chain	Residue	Modelled	Actual	Comment	Reference
A	-1	GLY	-	expression tag	UNP P07379
A	0	SER	-	expression tag	UNP P07379
C	-1	GLY	-	expression tag	UNP P07379
C	0	SER	-	expression tag	UNP P07379

- Molecule 2 is 2-PHOSPHOGLYCOLIC ACID (three-letter code: PGA) (formula: $C_2H_5O_6P$).

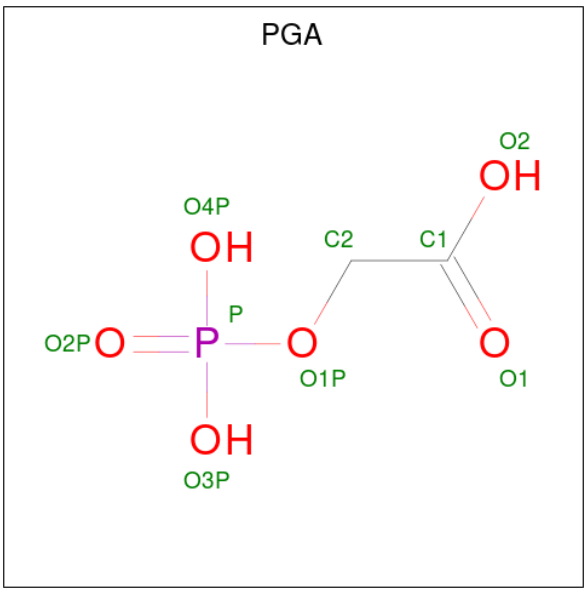

Mol	Chain	Residues	Atoms				ZeroOcc	AltConf
			Total	C	O	P		
2	A	1	18	4	12	2	0	1
			Total	C	O	P		
2	C	1	18	4	12	2	0	1

- Molecule 3 is MANGANESE (II) ION (three-letter code: MN) (formula: Mn).

Mol	Chain	Residues	Atoms		ZeroOcc	AltConf
			Total	Mn		
3	A	2	2	2	0	0
			Total	Mn		
3	C	2	2	2	0	0

- Molecule 4 is SODIUM ION (three-letter code: NA) (formula: Na).

Mol	Chain	Residues	Atoms		ZeroOcc	AltConf
			Total	Na		
4	A	1	1	1	0	0
			Total	Na		
4	C	1	1	1	0	0

- Molecule 5 is water.

Mol	Chain	Residues	Atoms		ZeroOcc	AltConf
			Total	O		
5	A	513	513	513	0	0
			Total	O		
5	C	505	505	505	0	0

3 Residue-property plots (i)

These plots are drawn for all protein, RNA, DNA and oligosaccharide chains in the entry. The first graphic for a chain summarises the proportions of the various outlier classes displayed in the second graphic. The second graphic shows the sequence view annotated by issues in geometry and electron density. Residues are color-coded according to the number of geometric quality criteria for which they contain at least one outlier: green = 0, yellow = 1, orange = 2 and red = 3 or more. A red dot above a residue indicates a poor fit to the electron density (RSRZ > 2). Stretches of 2 or more consecutive residues without any outlier are shown as a green connector. Residues present in the sample, but not in the model, are shown in grey.

• Molecule 1: Phosphoenolpyruvate carboxykinase, cytosolic [GTP]

Chain A:

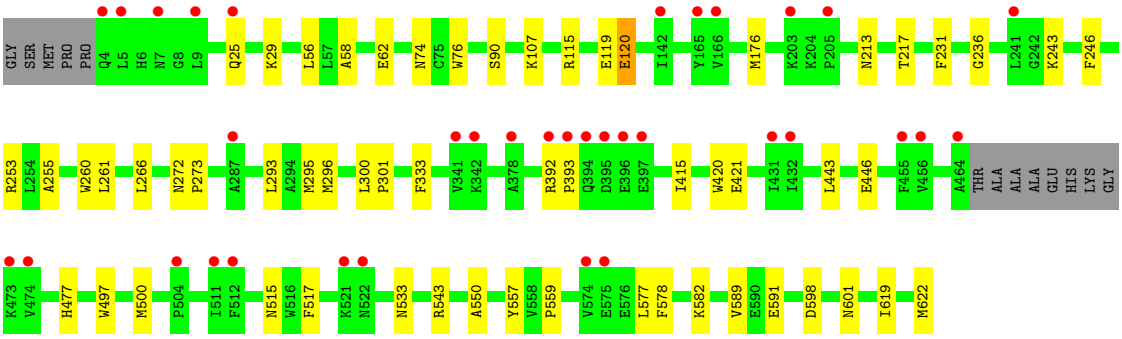

• Molecule 1: Phosphoenolpyruvate carboxykinase, cytosolic [GTP]

Chain C:

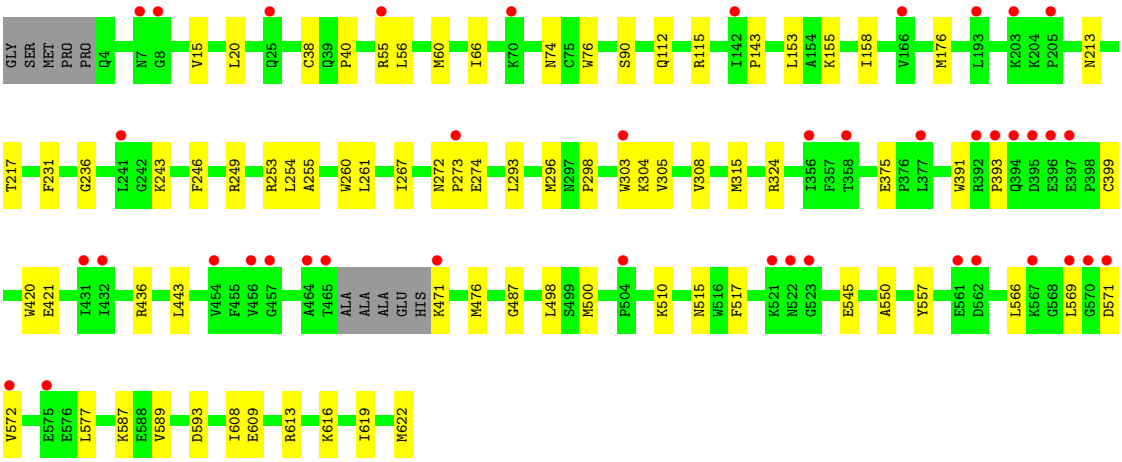

4 Data and refinement statistics (i)

Property	Value	Source
Space group	P 1 21 1	Depositor
Cell constants a, b, c, α, β, γ	60.67Å 119.66Å 90.87Å 90.00° 108.90° 90.00°	Depositor
Resolution (Å)	29.92 – 1.95 29.91 – 1.95	Depositor EDS
% Data completeness (in resolution range)	96.4 (29.92-1.95) 96.4 (29.91-1.95)	Depositor EDS
R_{merge}	0.10	Depositor
R_{sym}	(Not available)	Depositor
$< I/\sigma(I) >$ [1]	2.44 (at 1.95Å)	Xtriage
Refinement program	REFMAC	Depositor
R, R_{free}	0.183 , 0.222 0.182 , 0.222	Depositor DCC
R_{free} test set	4327 reflections (5.01%)	wwPDB-VP
Wilson B-factor (Å^2)	22.1	Xtriage
Anisotropy	0.454	Xtriage
Bulk solvent k_{sol}(e/Å^3), B_{sol}(Å^2)	0.34 , 44.0	EDS
L-test for twinning[2]	$< \|L\| > = 0.51$, $< L^2 > = 0.34$	Xtriage
Estimated twinning fraction	0.000 for h,-k,-h-l	Xtriage
F_o,F_c correlation	0.95	EDS
Total number of atoms	11081	wwPDB-VP
Average B, all atoms (Å^2)	19.0	wwPDB-VP

Xtriage's analysis on translational NCS is as follows: *The analyses of the Patterson function reveals a significant off-origin peak that is 79.86 % of the origin peak, indicating pseudo-translational symmetry. The chance of finding a peak of this or larger height randomly in a structure without pseudo-translational symmetry is equal to 5.0830e-07. The detected translational NCS is most likely also responsible for the elevated intensity ratio.*

[1]Intensities estimated from amplitudes.

[2]Theoretical values of $< |L| >$, $< L^2 >$ for acentric reflections are 0.5, 0.333 respectively for untwinned datasets, and 0.375, 0.2 for perfectly twinned datasets.

5 Model quality (i)

5.1 Standard geometry (i)

Bond lengths and bond angles in the following residue types are not validated in this section: NA, MN, PGA

The Z score for a bond length (or angle) is the number of standard deviations the observed value is removed from the expected value. A bond length (or angle) with $|Z| > 5$ is considered an outlier worth inspection. RMSZ is the root-mean-square of all Z scores of the bond lengths (or angles).

Mol	Chain	Bond lengths		Bond angles	
		RMSZ	$\#\|Z\|>5$	RMSZ	$\#\|Z\|>5$
1	A	0.43	0/5208	0.54	0/7039
1	C	0.43	0/5230	0.55	0/7064
All	All	0.43	0/10438	0.55	0/14103

There are no bond length outliers.

There are no bond angle outliers.

There are no chirality outliers.

There are no planarity outliers.

5.2 Too-close contacts (i)

In the following table, the Non-H and H(model) columns list the number of non-hydrogen atoms and hydrogen atoms in the chain respectively. The H(added) column lists the number of hydrogen atoms added and optimized by MolProbity. The Clashes column lists the number of clashes within the asymmetric unit, whereas Symm-Clashes lists symmetry-related clashes.

Mol	Chain	Non-H	H(model)	H(added)	Clashes	Symm-Clashes
1	A	4992	0	5050	35	0
1	C	5029	0	5079	44	0
2	A	18	0	4	0	0
2	C	18	0	4	0	0
3	A	2	0	0	0	0
3	C	2	0	0	0	0
4	A	1	0	0	0	0
4	C	1	0	0	0	0
5	A	513	0	0	4	0
5	C	505	0	0	6	0
All	All	11081	0	10137	79	0

The all-atom clashscore is defined as the number of clashes found per 1000 atoms (including hydrogen atoms). The all-atom clashscore for this structure is 4.

All (79) close contacts within the same asymmetric unit are listed below, sorted by their clash magnitude.

Atom-1	Atom-2	Interatomic distance (Å)	Clash overlap (Å)
1:C:589[B]:VAL:HG11	1:C:616[B]:LYS:CG	1.81	1.10
1:C:589[B]:VAL:CG1	1:C:616[B]:LYS:HG2	1.84	1.07
1:C:589[B]:VAL:HG11	1:C:616[B]:LYS:HG2	0.95	0.91
1:C:498:LEU:HD11	1:C:608[B]:ILE:HD12	1.64	0.78
1:C:589[B]:VAL:CG1	1:C:616[B]:LYS:CG	2.53	0.78
1:A:497:TRP:HA	1:A:500[B]:MET:HE2	1.67	0.77
1:A:497:TRP:HA	1:A:500[B]:MET:CE	2.15	0.76
1:A:119[B]:GLU:HG3	5:A:1020:HOH:O	1.85	0.75
1:A:107:LYS:N	1:A:601[B]:ASN:HD21	1.90	0.69
1:C:498:LEU:HD11	1:C:608[B]:ILE:CD1	2.23	0.69
1:A:107:LYS:HG3	1:A:601[B]:ASN:ND2	2.09	0.68
1:C:589[B]:VAL:HG12	1:C:616[B]:LYS:HE2	1.77	0.66
1:C:293:LEU:HD12	1:C:296:MET:HE3	1.80	0.63
1:A:619:ILE:O	1:A:622:MET:HG2	2.02	0.59
1:C:375:GLU:HG2	5:C:741:HOH:O	2.02	0.59
1:C:443:LEU:HB2	1:C:577:LEU:HD22	1.83	0.59
1:C:589[B]:VAL:CG1	1:C:616[B]:LYS:HE2	2.33	0.58
1:C:274:GLU:HG3	5:C:1124:HOH:O	2.04	0.58
1:C:593:ASP:OD2	1:C:616[B]:LYS:NZ	2.32	0.56
1:A:443:LEU:HB2	1:A:577:LEU:HD22	1.87	0.55
1:C:293:LEU:HD12	1:C:296:MET:CE	2.35	0.55
1:A:261:LEU:HD11	1:A:500[B]:MET:SD	2.47	0.55
1:A:420:TRP:CE2	1:A:421:GLU:HG3	2.43	0.54
1:C:566:LEU:HD22	1:C:572:VAL:HG11	1.91	0.53
1:C:261:LEU:HD11	1:C:500[B]:MET:SD	2.49	0.53
1:A:74:ASN:ND2	1:A:76:TRP:HE1	2.06	0.52
1:C:90:SER:HA	1:C:115[B]:ARG:CZ	2.40	0.52
1:C:38[B]:CYS:SG	1:C:40:PRO:HD3	2.50	0.51
1:A:107:LYS:HG3	1:A:601[B]:ASN:HD22	1.75	0.51
1:A:120:GLU:H	1:A:120:GLU:CD	2.13	0.51
1:A:392:ARG:HG2	1:A:393:PRO:HD2	1.93	0.50
1:C:420:TRP:CE2	1:C:421:GLU:HG3	2.48	0.49
1:C:74:ASN:ND2	1:C:76:TRP:HE1	2.12	0.48
1:A:295:MET:HA	1:A:415:ILE:HD11	1.94	0.48
1:C:609[B]:GLU:OE2	1:C:613[B]:ARG:NE	2.46	0.48
1:C:143:PRO:HA	1:C:158:ILE:HD13	1.94	0.48
1:C:217:THR:HA	1:C:231:PHE:O	2.14	0.47

Continued on next page...

Continued from previous page...

Atom-1	Atom-2	Interatomic distance (Å)	Clash overlap (Å)
1:C:391:TRP:CD2	1:C:399:CYS:HB3	2.49	0.47
1:C:619[A]:ILE:O	1:C:622:MET:HG2	2.14	0.47
1:C:155:LYS:HE2	1:C:254:LEU:HD13	1.96	0.47
1:C:298:PRO:HG3	1:C:305:VAL:HG23	1.97	0.47
1:A:25:GLN:HG2	1:A:29:LYS:HE3	1.98	0.46
1:C:15:VAL:HG21	1:C:20:LEU:HG	1.98	0.46
1:A:62:GLU:HB2	5:A:1172:HOH:O	2.16	0.46
1:A:90:SER:O	1:A:115[B]:ARG:NH1	2.49	0.46
1:A:255:ALA:HB1	1:A:260:TRP:O	2.16	0.46
1:C:587[A]:LYS:HG3	5:C:1149:HOH:O	2.16	0.46
1:C:619[B]:ILE:O	1:C:622:MET:HG2	2.17	0.45
1:C:273:PRO:HD3	1:C:303:TRP:CE2	2.52	0.44
1:C:589[A]:VAL:HG11	1:C:619[A]:ILE:HD12	2.00	0.44
1:A:58:ALA:HB3	5:A:996:HOH:O	2.17	0.44
1:A:266:LEU:HD21	1:A:293:LEU:HD23	2.00	0.43
1:A:217:THR:HA	1:A:231:PHE:O	2.18	0.43
1:A:515:ASN:ND2	1:A:517:PHE:H	2.17	0.43
1:A:550:ALA:HB1	1:A:557:TYR:HB3	1.99	0.43
1:C:589[B]:VAL:CG1	1:C:616[B]:LYS:CE	2.97	0.43
1:C:112:GLN:NE2	5:C:879:HOH:O	2.49	0.42
1:C:545:GLU:HG3	5:C:1087:HOH:O	2.19	0.42
1:A:477:HIS:HE2	1:A:591:GLU:CD	2.23	0.42
1:A:543:ARG:HA	1:A:543:ARG:HD2	1.89	0.42
1:C:550:ALA:HB1	1:C:557:TYR:HB3	2.01	0.42
1:C:255:ALA:HB1	1:C:260:TRP:O	2.20	0.42
1:C:272:ASN:HB2	1:C:273:PRO:CD	2.50	0.41
1:A:243:LYS:HE2	1:A:333:PHE:HB3	2.01	0.41
1:A:296:MET:HE2	1:A:533:ASN:HB2	2.03	0.41
1:A:272:ASN:HB2	1:A:273:PRO:CD	2.51	0.41
1:A:300:LEU:HA	1:A:301:PRO:HD2	1.91	0.41
1:A:559:PRO:HD2	1:A:578:PHE:CE1	2.55	0.41
1:A:601[B]:ASN:HB2	5:A:851:HOH:O	2.20	0.41
1:A:582:LYS:HB2	1:A:622:MET:HG3	2.04	0.40
1:A:295:MET:CA	1:A:415:ILE:HD11	2.51	0.40
1:A:598:ASP:O	1:A:601[B]:ASN:OD1	2.39	0.40
1:C:60:MET:HB3	1:C:66:ILE:HG12	2.03	0.40
1:C:249:ARG:O	1:C:487:GLY:HA3	2.22	0.40
1:C:315:MET:HA	1:C:324:ARG:O	2.21	0.40
1:C:436:ARG:HD3	5:C:1136:HOH:O	2.20	0.40
1:C:515:ASN:ND2	1:C:517:PHE:H	2.19	0.40
1:A:446:GLU:HB3	1:A:557:TYR:HB2	2.04	0.40

Continued on next page...

Continued from previous page...

Atom-1	Atom-2	Interatomic distance (Å)	Clash overlap (Å)
1:C:267:ILE:HB	1:C:308:VAL:HB	2.03	0.40

There are no symmetry-related clashes.

5.3 Torsion angles (i)

5.3.1 Protein backbone (i)

In the following table, the Percentiles column shows the percent Ramachandran outliers of the chain as a percentile score with respect to all X-ray entries followed by that with respect to entries of similar resolution.

The Analysed column shows the number of residues for which the backbone conformation was analysed, and the total number of residues.

Mol	Chain	Analysed	Favoured	Allowed	Outliers	Percentiles	
1	A	639/624 (102%)	622 (97%)	16 (2%)	1 (0%)	47	38
1	C	641/624 (103%)	620 (97%)	18 (3%)	3 (0%)	29	17
All	All	1280/1248 (103%)	1242 (97%)	34 (3%)	4 (0%)	41	30

All (4) Ramachandran outliers are listed below:

Mol	Chain	Res	Type
1	A	236	GLY
1	C	236	GLY
1	C	243	LYS
1	C	393	PRO

5.3.2 Protein sidechains (i)

In the following table, the Percentiles column shows the percent sidechain outliers of the chain as a percentile score with respect to all X-ray entries followed by that with respect to entries of similar resolution.

The Analysed column shows the number of residues for which the sidechain conformation was analysed, and the total number of residues.

Mol	Chain	Analysed	Rotameric	Outliers	Percentiles	
1	A	544/520 (105%)	537 (99%)	7 (1%)	69	65

Continued on next page...

Continued from previous page...

Mol	Chain	Analysed	Rotameric	Outliers	Percentiles	
1	C	545/520 (105%)	529 (97%)	16 (3%)	42	31
All	All	1089/1040 (105%)	1066 (98%)	23 (2%)	57	46

All (23) residues with a non-rotameric sidechain are listed below:

Mol	Chain	Res	Type
1	A	56	LEU
1	A	120	GLU
1	A	176	MET
1	A	213	ASN
1	A	246	PHE
1	A	253	ARG
1	A	589	VAL
1	C	55[A]	ARG
1	C	55[B]	ARG
1	C	56	LEU
1	C	153	LEU
1	C	176	MET
1	C	213	ASN
1	C	246	PHE
1	C	253	ARG
1	C	304	LYS
1	C	471	LYS
1	C	476[A]	MET
1	C	476[B]	MET
1	C	510[A]	LYS
1	C	510[B]	LYS
1	C	569	LEU
1	C	571	ASP

Sometimes sidechains can be flipped to improve hydrogen bonding and reduce clashes. All (14) such sidechains are listed below:

Mol	Chain	Res	Type
1	A	36	GLN
1	A	59	HIS
1	A	74	ASN
1	A	112	GLN
1	A	213	ASN
1	A	292	ASN
1	A	352	GLN
1	A	515	ASN

Continued on next page...

Continued from previous page...

Mol	Chain	Res	Type
1	C	59	HIS
1	C	74	ASN
1	C	112	GLN
1	C	213	ASN
1	C	238	ASN
1	C	515	ASN

5.3.3 RNA (i)

There are no RNA molecules in this entry.

5.4 Non-standard residues in protein, DNA, RNA chains (i)

There are no non-standard protein/DNA/RNA residues in this entry.

5.5 Carbohydrates (i)

There are no monosaccharides in this entry.

5.6 Ligand geometry (i)

Of 10 ligands modelled in this entry, 6 are monoatomic - leaving 4 for Mogul analysis.

In the following table, the Counts columns list the number of bonds (or angles) for which Mogul statistics could be retrieved, the number of bonds (or angles) that are observed in the model and the number of bonds (or angles) that are defined in the Chemical Component Dictionary. The Link column lists molecule types, if any, to which the group is linked. The Z score for a bond length (or angle) is the number of standard deviations the observed value is removed from the expected value. A bond length (or angle) with $|Z| > 2$ is considered an outlier worth inspection. RMSZ is the root-mean-square of all Z scores of the bond lengths (or angles).

Mol	Type	Chain	Res	Link	Bond lengths			Bond angles		
					Counts	RMSZ	$\#\|Z\| > 2$	Counts	RMSZ	$\#\|Z\| > 2$
2	PGA	C	623[B]	-	8,8,8	1.13	1 (12%)	10,11,11	0.94	0
2	PGA	A	623[B]	-	8,8,8	1.15	0	10,11,11	0.99	0
2	PGA	A	623[A]	3	8,8,8	1.32	1 (12%)	10,11,11	1.12	0
2	PGA	C	623[A]	3	8,8,8	1.26	1 (12%)	10,11,11	1.12	0

In the following table, the Chirals column lists the number of chiral outliers, the number of chiral centers analysed, the number of these observed in the model and the number defined in the

Chemical Component Dictionary. Similar counts are reported in the Torsion and Rings columns. '-' means no outliers of that kind were identified.

Mol	Type	Chain	Res	Link	Chirals	Torsions	Rings
2	PGA	C	623[B]	-	-	2/6/6/6	-
2	PGA	A	623[B]	-	-	5/6/6/6	-
2	PGA	A	623[A]	3	-	5/6/6/6	-
2	PGA	C	623[A]	3	-	5/6/6/6	-

All (3) bond length outliers are listed below:

Mol	Chain	Res	Type	Atoms	Z	Observed(Å)	Ideal(Å)
2	A	623[A]	PGA	O1P-C2	-3.07	1.41	1.43
2	C	623[A]	PGA	O1P-C2	-2.91	1.41	1.43
2	C	623[B]	PGA	O1P-C2	-2.16	1.41	1.43

There are no bond angle outliers.

There are no chirality outliers.

All (17) torsion outliers are listed below:

Mol	Chain	Res	Type	Atoms
2	A	623[A]	PGA	C2-O1P-P-O3P
2	A	623[A]	PGA	C2-O1P-P-O4P
2	A	623[B]	PGA	C2-O1P-P-O2P
2	A	623[B]	PGA	C2-O1P-P-O3P
2	A	623[B]	PGA	C2-O1P-P-O4P
2	C	623[A]	PGA	C2-O1P-P-O3P
2	C	623[A]	PGA	C2-O1P-P-O4P
2	C	623[B]	PGA	O1-C1-C2-O1P
2	C	623[B]	PGA	O2-C1-C2-O1P
2	A	623[A]	PGA	O1-C1-C2-O1P
2	C	623[A]	PGA	O1-C1-C2-O1P
2	A	623[A]	PGA	O2-C1-C2-O1P
2	C	623[A]	PGA	O2-C1-C2-O1P
2	A	623[A]	PGA	C2-O1P-P-O2P
2	C	623[A]	PGA	C2-O1P-P-O2P
2	A	623[B]	PGA	O2-C1-C2-O1P
2	A	623[B]	PGA	O1-C1-C2-O1P

There are no ring outliers.

No monomer is involved in short contacts.

5.7 Other polymers (i)

There are no such residues in this entry.

5.8 Polymer linkage issues (i)

There are no chain breaks in this entry.

6 Fit of model and data (i)

6.1 Protein, DNA and RNA chains (i)

In the following table, the column labelled '#RSRZ> 2' contains the number (and percentage) of RSRZ outliers, followed by percent RSRZ outliers for the chain as percentile scores relative to all X-ray entries and entries of similar resolution. The OWAB column contains the minimum, median, 95th percentile and maximum values of the occupancy-weighted average B-factor per residue. The column labelled 'Q< 0.9' lists the number of (and percentage) of residues with an average occupancy less than 0.9.

Mol	Chain	Analysed	<RSRZ>	#RSRZ>2			OWAB(Å^2)	Q<0.9
1	A	611/624 (97%)	0.48	35 (5%)	23	32	12, 17, 26, 35	0
1	C	614/624 (98%)	0.53	42 (6%)	17	25	12, 17, 26, 31	0
All	All	1225/1248 (98%)	0.51	77 (6%)	20	28	12, 17, 26, 35	0

All (77) RSRZ outliers are listed below:

Mol	Chain	Res	Type	RSRZ
1	C	394	GLN	9.5
1	C	569	LEU	6.1
1	A	394	GLN	5.6
1	A	393	PRO	5.3
1	C	465	THR	5.2
1	C	396	GLU	4.7
1	A	395	ASP	4.7
1	A	396	GLU	4.4
1	C	521	LYS	4.4
1	A	521	LYS	4.3
1	C	571	ASP	4.3
1	A	392	ARG	4.3
1	C	504	PRO	4.2
1	C	395	ASP	4.1
1	A	7	ASN	4.1
1	A	504	PRO	4.0
1	A	464	ALA	4.0
1	A	574	VAL	3.9
1	A	341	VAL	3.8
1	C	393	PRO	3.8
1	A	397	GLU	3.8
1	A	473	LYS	3.8
1	C	570	GLY	3.2
1	C	392	ARG	3.1

Continued on next page...

Continued from previous page...

Mol	Chain	Res	Type	RSRZ
1	C	205	PRO	3.1
1	A	432	ILE	3.1
1	A	166	VAL	3.0
1	A	342	LYS	3.0
1	C	70	LYS	2.8
1	C	432	ILE	2.8
1	C	8	GLY	2.7
1	C	575	GLU	2.7
1	A	9	LEU	2.7
1	C	464	ALA	2.7
1	C	522	ASN	2.7
1	C	166	VAL	2.6
1	C	567	LYS	2.6
1	C	471	LYS	2.6
1	A	575	GLU	2.6
1	A	474	VAL	2.6
1	A	241	LEU	2.5
1	C	142	ILE	2.5
1	A	287	ALA	2.5
1	A	25	GLN	2.5
1	C	562	ASP	2.5
1	C	273	PRO	2.5
1	C	572	VAL	2.5
1	C	356	ILE	2.4
1	A	205	PRO	2.4
1	C	523	GLY	2.4
1	A	522	ASN	2.4
1	C	397	GLU	2.4
1	C	456	VAL	2.4
1	A	455	PHE	2.4
1	A	511	ILE	2.4
1	C	431	ILE	2.3
1	C	241	LEU	2.3
1	A	512	PHE	2.3
1	A	4	GLN	2.3
1	C	561	GLU	2.3
1	A	5	LEU	2.2
1	A	165	TYR	2.2
1	C	7	ASN	2.2
1	A	378	ALA	2.2
1	C	203	LYS	2.2
1	A	431	ILE	2.1

Continued on next page...

Continued from previous page...

Mol	Chain	Res	Type	RSRZ
1	C	377	LEU	2.1
1	A	203	LYS	2.1
1	C	55[A]	ARG	2.1
1	C	457	GLY	2.1
1	C	193	LEU	2.1
1	C	25	GLN	2.0
1	A	456	VAL	2.0
1	C	303	TRP	2.0
1	A	142	ILE	2.0
1	C	358	THR	2.0
1	C	454	VAL	2.0

6.2 Non-standard residues in protein, DNA, RNA chains (i)

There are no non-standard protein/DNA/RNA residues in this entry.

6.3 Carbohydrates (i)

There are no monosaccharides in this entry.

6.4 Ligands (i)

In the following table, the Atoms column lists the number of modelled atoms in the group and the number defined in the chemical component dictionary. The B-factors column lists the minimum, median, 95th percentile and maximum values of B factors of atoms in the group. The column labelled 'Q< 0.9' lists the number of atoms with occupancy less than 0.9.

Mol	Type	Chain	Res	Atoms	RSCC	RSR	B-factors(Å^2)	Q<0.9
2	PGA	A	623[A]	9/9	0.91	0.18	12,15,17,17	9
2	PGA	A	623[B]	9/9	0.91	0.18	19,21,23,23	9
2	PGA	C	623[A]	9/9	0.93	0.17	12,14,15,15	9
2	PGA	C	623[B]	9/9	0.93	0.17	18,19,20,20	9
3	MN	C	701	1/1	0.95	0.07	30,30,30,30	1
3	MN	A	701	1/1	0.97	0.07	19,19,19,19	1
4	NA	A	702	1/1	0.97	0.15	21,21,21,21	0
4	NA	C	702	1/1	0.98	0.18	19,19,19,19	0
3	MN	A	700	1/1	0.99	0.11	10,10,10,10	0
3	MN	C	700	1/1	1.00	0.09	10,10,10,10	0

6.5 Other polymers (i)

There are no such residues in this entry.