Full wwPDB X-ray Structure Validation Report (i)

May 28, 2020 – 02:26 am BST

PDB ID	:	5Q4N
Title	:	PanDDA analysis group deposition – Crystal Structure of DCLRE1A after initial refinement with no ligand modelled (structure 88)
Authors	:	Newman, J.A.; Aitkenhead, H.; Lee, S.Y.; Kupinska, K.; Burgess-Brown, N.; Tallon, R.; Krojer, T.; von Delft, F.; Arrowsmith, C.H.; Edwards, A.; Bountra, C.; Gileadi, O.
Deposited on	:	2017-05-25
Resolution	:	1.71 Å(reported)

This is a Full wwPDB X-ray Structure Validation Report for a publicly released PDB entry.

We welcome your comments at *validation@mail.wwpdb.org*
A user guide is available at
https://www.wwpdb.org/validation/2017/XrayValidationReportHelp
with specific help available everywhere you see the (i) symbol.

The following versions of software and data (see references (1)) were used in the production of this report:

MolProbity	:	4.02b-467
Mogul	:	1.8.5 (274361), CSD as541be (2020)
Xtriage (Phenix)	:	1.13
EDS	:	2.11
Percentile statistics	:	20191225.v01 (using entries in the PDB archive December 25th 2019)
Refmac	:	5.8.0158
CCP4	:	7.0.044 (Gargrove)
Ideal geometry (proteins)	:	Engh & Huber (2001)
Ideal geometry (DNA, RNA)	:	Parkinson et al. (1996)
Validation Pipeline (wwPDB-VP)	:	2.11

1 Overall quality at a glance (i)

The following experimental techniques were used to determine the structure:
X-RAY DIFFRACTION

The reported resolution of this entry is 1.71 Å.

Percentile scores (ranging between 0-100) for global validation metrics of the entry are shown in the following graphic. The table shows the number of entries on which the scores are based.

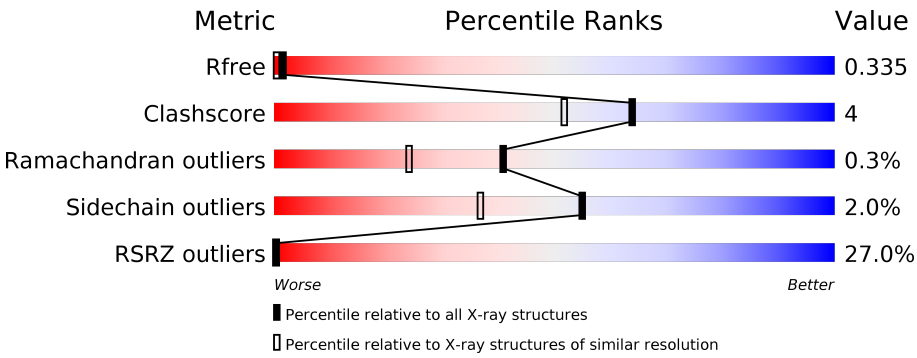

Metric	Whole archive (#Entries)	Similar resolution (#Entries, resolution range(Å))
R_{free}	130704	5722 (1.74-1.70)
Clashscore	141614	6152 (1.74-1.70)
Ramachandran outliers	138981	6051 (1.74-1.70)
Sidechain outliers	138945	6051 (1.74-1.70)
RSRZ outliers	127900	5629 (1.74-1.70)

The table below summarises the geometric issues observed across the polymeric chains and their fit to the electron density. The red, orange, yellow and green segments on the lower bar indicate the fraction of residues that contain outliers for >=3, 2, 1 and 0 types of geometric quality criteria respectively. A grey segment represents the fraction of residues that are not modelled. The numeric value for each fraction is indicated below the corresponding segment, with a dot representing fractions <=5% The upper red bar (where present) indicates the fraction of residues that have poor fit to the electron density. The numeric value is given above the bar.

Mol	Chain	Length	Quality of chain
1	A	343	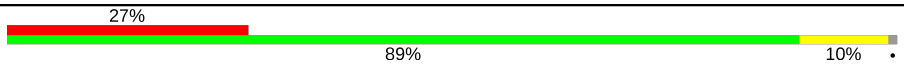

2 Entry composition (i)

There are 4 unique types of molecules in this entry. The entry contains 3044 atoms, of which 0 are hydrogens and 0 are deuteriums.

In the tables below, the ZeroOcc column contains the number of atoms modelled with zero occupancy, the AltConf column contains the number of residues with at least one atom in alternate conformation and the Trace column contains the number of residues modelled with at most 2 atoms.

- Molecule 1 is a protein called DCLRE1A.

Mol	Chain	Residues	Atoms					ZeroOcc	AltConf	Trace
			Total	C	N	O	S			
1	A	341	2726	1765	450	491	20	0	4	0

- Molecule 2 is MALONATE ION (three-letter code: MLI) (formula: $C_3H_2O_4$).

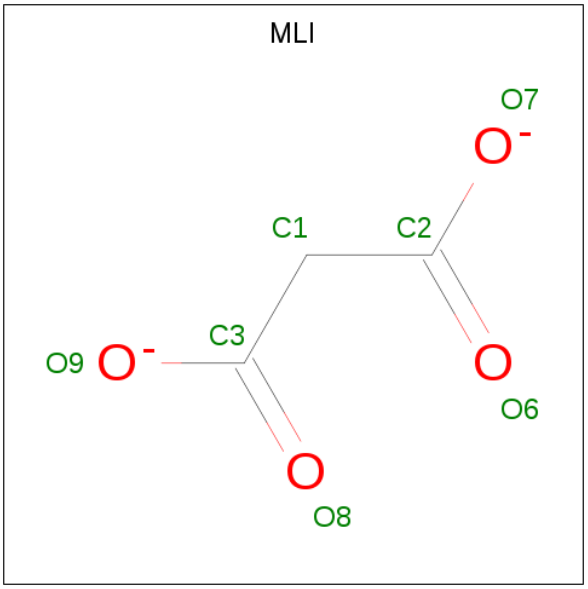

Mol	Chain	Residues	Atoms			ZeroOcc	AltConf
			Total	C	O		
2	A	1	7	3	4	0	0

- Molecule 3 is NICKEL (II) ION (three-letter code: NI) (formula: Ni).

Mol	Chain	Residues	Atoms		ZeroOcc	AltConf
			Total	Ni		
3	A	1	1	1	0	0

- Molecule 4 is water.

Mol	Chain	Residues	Atoms		ZeroOcc	AltConf
			Total	O		
4	A	310	310	310	0	0

3 Residue-property plots (i)

These plots are drawn for all protein, RNA and DNA chains in the entry. The first graphic for a chain summarises the proportions of the various outlier classes displayed in the second graphic. The second graphic shows the sequence view annotated by issues in geometry and electron density. Residues are color-coded according to the number of geometric quality criteria for which they contain at least one outlier: green = 0, yellow = 1, orange = 2 and red = 3 or more. A red dot above a residue indicates a poor fit to the electron density (RSRZ > 2). Stretches of 2 or more consecutive residues without any outlier are shown as a green connector. Residues present in the sample, but not in the model, are shown in grey.

- Molecule 1: DCLRE1A

Chain A:

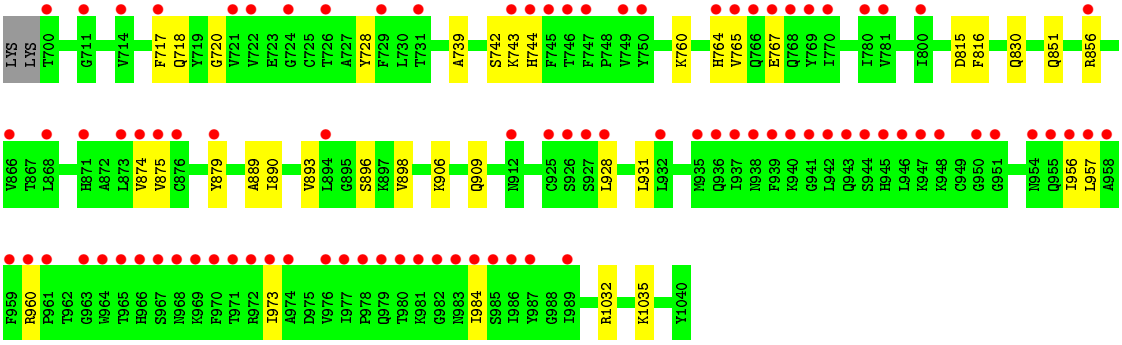

4 Data and refinement statistics (i)

Property	Value	Source
Space group	P 21 21 21	Depositor
Cell constants a, b, c, α, β, γ	51.93Å 57.94Å 114.64Å 90.00° 90.00° 90.00°	Depositor
Resolution (Å)	23.69 – 1.71 23.69 – 1.71	Depositor EDS
% Data completeness (in resolution range)	99.8 (23.69-1.71) 100.0 (23.69-1.71)	Depositor EDS
R_{merge}	0.09	Depositor
R_{sym}	(Not available)	Depositor
$< I/\sigma(I) >$ [1]	1.64 (at 1.71Å)	Xtriage
Refinement program	REFMAC 5.8.0155	Depositor
R, R_{free}	0.269 , 0.324 0.281 , 0.335	Depositor DCC
R_{free} test set	1864 reflections (4.89%)	wwPDB-VP
Wilson B-factor (Å^2)	25.9	Xtriage
Anisotropy	0.227	Xtriage
Bulk solvent k_{sol}(e/Å^3), B_{sol}(Å^2)	0.31 , 41.6	EDS
L-test for twinning[2]	$< \|L\| > = 0.48$, $< L^2 > = 0.31$	Xtriage
Estimated twinning fraction	No twinning to report.	Xtriage
F_o,F_c correlation	0.93	EDS
Total number of atoms	3044	wwPDB-VP
Average B, all atoms (Å^2)	46.0	wwPDB-VP

Xtriage's analysis on translational NCS is as follows: *The largest off-origin peak in the Patterson function is 5.94% of the height of the origin peak. No significant pseudotranslation is detected.*

[1] Intensities estimated from amplitudes.

[2] Theoretical values of $< |L| >$, $< L^2 >$ for acentric reflections are 0.5, 0.333 respectively for untwinned datasets, and 0.375, 0.2 for perfectly twinned datasets.

5 Model quality (i)

5.1 Standard geometry (i)

Bond lengths and bond angles in the following residue types are not validated in this section: NI, MLI

The Z score for a bond length (or angle) is the number of standard deviations the observed value is removed from the expected value. A bond length (or angle) with $|Z| > 5$ is considered an outlier worth inspection. RMSZ is the root-mean-square of all Z scores of the bond lengths (or angles).

Mol	Chain	Bond lengths		Bond angles	
		RMSZ	$\#\|Z\|>5$	RMSZ	$\#\|Z\|>5$
1	A	0.71	0/2802	0.81	1/3809 (0.0%)

There are no bond length outliers.

All (1) bond angle outliers are listed below:

Mol	Chain	Res	Type	Atoms	Z	Observed(^{o})	Ideal(^{o})
1	A	960	ARG	NE-CZ-NH1	5.22	122.91	120.30

There are no chirality outliers.

There are no planarity outliers.

5.2 Too-close contacts (i)

In the following table, the Non-H and H(model) columns list the number of non-hydrogen atoms and hydrogen atoms in the chain respectively. The H(added) column lists the number of hydrogen atoms added and optimized by MolProbity. The Clashes column lists the number of clashes within the asymmetric unit, whereas Symm-Clashes lists symmetry related clashes.

Mol	Chain	Non-H	H(model)	H(added)	Clashes	Symm-Clashes
1	A	2726	0	2676	23	0
2	A	7	0	2	0	0
3	A	1	0	0	0	0
4	A	310	0	0	14	0
All	All	3044	0	2678	23	0

The all-atom clashscore is defined as the number of clashes found per 1000 atoms (including hydrogen atoms). The all-atom clashscore for this structure is 4.

All (23) close contacts within the same asymmetric unit are listed below, sorted by their clash

magnitude.

Atom-1	Atom-2	Interatomic distance (Å)	Clash overlap (Å)
1:A:909:GLN:NE2	4:A:1201:HOH:O	2.09	0.86
1:A:1032:ARG:NH2	4:A:1209:HOH:O	2.31	0.64
1:A:896:SER:O	4:A:1203:HOH:O	2.15	0.64
1:A:815:ASP:OD1	4:A:1202:HOH:O	2.15	0.62
1:A:1032:ARG:NE	4:A:1214:HOH:O	2.40	0.54
1:A:906:LYS:NZ	4:A:1212:HOH:O	2.39	0.54
1:A:1035:LYS:NZ	4:A:1213:HOH:O	2.40	0.54
1:A:743:LYS:HG3	1:A:744:HIS:CE1	2.45	0.51
1:A:973:ILE:HG23	4:A:1443:HOH:O	2.11	0.50
1:A:1032:ARG:CZ	4:A:1214:HOH:O	2.59	0.49
1:A:874:VAL:HG11	1:A:890:ILE:HG21	1.93	0.48
1:A:717:PHE:CE1	1:A:728:TYR:HB3	2.48	0.48
1:A:742:SER:O	1:A:765:VAL:HG22	2.13	0.47
1:A:718:GLN:HG2	4:A:1285:HOH:O	2.18	0.43
1:A:720:GLY:N	4:A:1227:HOH:O	2.51	0.43
1:A:718:GLN:HB3	1:A:739:ALA:O	2.19	0.42
1:A:856:ARG:HA	1:A:856:ARG:HE	1.85	0.42
1:A:889:ALA:O	4:A:1204:HOH:O	2.22	0.42
1:A:875:VAL:HG23	1:A:956:ILE:HG23	2.02	0.42
1:A:851:GLN:NE2	4:A:1231:HOH:O	2.52	0.42
1:A:760:LYS:O	1:A:764[A]:HIS:HA	2.20	0.41
1:A:898:VAL:HG11	1:A:931:LEU:HD21	2.02	0.41
1:A:984:ILE:HD12	4:A:1300:HOH:O	2.21	0.40

There are no symmetry-related clashes.

5.3 Torsion angles (i)

5.3.1 Protein backbone (i)

In the following table, the Percentiles column shows the percent Ramachandran outliers of the chain as a percentile score with respect to all X-ray entries followed by that with respect to entries of similar resolution.

The Analysed column shows the number of residues for which the backbone conformation was analysed, and the total number of residues.

Mol	Chain	Analysed	Favoured	Allowed	Outliers	Percentiles
1	A	343/343 (100%)	326 (95%)	16 (5%)	1 (0%)	41 24

All (1) Ramachandran outliers are listed below:

Mol	Chain	Res	Type
1	A	767	GLU

5.3.2 Protein sidechains (i)

In the following table, the Percentiles column shows the percent sidechain outliers of the chain as a percentile score with respect to all X-ray entries followed by that with respect to entries of similar resolution.

The Analysed column shows the number of residues for which the sidechain conformation was analysed, and the total number of residues.

Mol	Chain	Analysed	Rotameric	Outliers	Percentiles
1	A	299/305 (98%)	293 (98%)	6 (2%)	55 37

All (6) residues with a non-rotameric sidechain are listed below:

Mol	Chain	Res	Type
1	A	816	PHE
1	A	830	GLN
1	A	879	TYR
1	A	893	VAL
1	A	928	LEU
1	A	957	LEU

Some sidechains can be flipped to improve hydrogen bonding and reduce clashes. All (4) such sidechains are listed below:

Mol	Chain	Res	Type
1	A	744	HIS
1	A	851	GLN
1	A	869	ASN
1	A	909	GLN

5.3.3 RNA (i)

There are no RNA molecules in this entry.

5.4 Non-standard residues in protein, DNA, RNA chains (i)

There are no non-standard protein/DNA/RNA residues in this entry.

5.5 Carbohydrates (i)

There are no carbohydrates in this entry.

5.6 Ligand geometry (i)

Of 2 ligands modelled in this entry, 1 is monoatomic - leaving 1 for Mogul analysis.

In the following table, the Counts columns list the number of bonds (or angles) for which Mogul statistics could be retrieved, the number of bonds (or angles) that are observed in the model and the number of bonds (or angles) that are defined in the Chemical Component Dictionary. The Link column lists molecule types, if any, to which the group is linked. The Z score for a bond length (or angle) is the number of standard deviations the observed value is removed from the expected value. A bond length (or angle) with $|Z| > 2$ is considered an outlier worth inspection. RMSZ is the root-mean-square of all Z scores of the bond lengths (or angles).

Mol	Type	Chain	Res	Link	Bond lengths			Bond angles		
					Counts	RMSZ	$\#\|Z\| > 2$	Counts	RMSZ	$\#\|Z\| > 2$
2	MLI	A	1101	3	0,6,6	0.00	-	0,7,7	0.00	-

In the following table, the Chirals column lists the number of chiral outliers, the number of chiral centers analysed, the number of these observed in the model and the number defined in the Chemical Component Dictionary. Similar counts are reported in the Torsion and Rings columns. '-' means no outliers of that kind were identified.

Mol	Type	Chain	Res	Link	Chirals	Torsions	Rings
2	MLI	A	1101	3	-	0/0/4/4	-

There are no bond length outliers.

There are no bond angle outliers.

There are no chirality outliers.

There are no torsion outliers.

There are no ring outliers.

No monomer is involved in short contacts.

5.7 Other polymers (i)

There are no such residues in this entry.

5.8 Polymer linkage issues (i)

There are no chain breaks in this entry.

6 Fit of model and data (i)

6.1 Protein, DNA and RNA chains (i)

In the following table, the column labelled '#RSRZ> 2' contains the number (and percentage) of RSRZ outliers, followed by percent RSRZ outliers for the chain as percentile scores relative to all X-ray entries and entries of similar resolution. The OWAB column contains the minimum, median, 95th percentile and maximum values of the occupancy-weighted average B-factor per residue. The column labelled 'Q< 0.9' lists the number of (and percentage) of residues with an average occupancy less than 0.9.

Mol	Chain	Analysed	<RSRZ>	#RSRZ>2	OWAB(Å^2)	Q<0.9
1	A	341/343 (99%)	1.61	92 (26%) 0 0	17, 37, 104, 174	0

All (92) RSRZ outliers are listed below:

Mol	Chain	Res	Type	RSRZ
1	A	970	PHE	27.4
1	A	966	HIS	18.5
1	A	768	GLN	11.0
1	A	984	ILE	10.9
1	A	967	SER	10.5
1	A	972	ARG	10.5
1	A	744	HIS	9.4
1	A	973	ILE	8.4
1	A	977	ILE	8.4
1	A	939	PHE	8.3
1	A	968	ASN	7.7
1	A	986	ILE	7.6
1	A	980	THR	7.2
1	A	937	ILE	7.0
1	A	941	GLY	6.8
1	A	981	LYS	6.8
1	A	951	GLY	6.7
1	A	950	GLY	6.7
1	A	769	TYR	6.4
1	A	876[A]	CYS	6.2
1	A	979	GLN	6.2
1	A	943	GLN	5.7
1	A	969	LYS	5.7
1	A	956	ILE	5.7
1	A	942	LEU	5.6
1	A	765	VAL	5.5
1	A	938	ASN	5.3

Continued on next page...

Continued from previous page...

Mol	Chain	Res	Type	RSRZ
1	A	745	PHE	5.3
1	A	971	THR	5.3
1	A	935	MET	5.2
1	A	957	LEU	5.1
1	A	987	TYR	5.1
1	A	940	LYS	5.0
1	A	985	SER	5.0
1	A	747	PHE	5.0
1	A	974	ALA	4.9
1	A	874	VAL	4.6
1	A	944	SER	4.5
1	A	959	PHE	4.2
1	A	724	GLY	4.2
1	A	982	GLY	4.0
1	A	954	ASN	3.9
1	A	978	PRO	3.8
1	A	879	TYR	3.6
1	A	983	ASN	3.5
1	A	750	TYR	3.4
1	A	767	GLU	3.4
1	A	964	TRP	3.4
1	A	856	ARG	3.4
1	A	726	THR	3.4
1	A	746	THR	3.3
1	A	989	ILE	3.3
1	A	976	VAL	3.2
1	A	928	LEU	3.2
1	A	729	PHE	3.2
1	A	925	CYS	3.1
1	A	781	VAL	3.1
1	A	800	ILE	3.1
1	A	711	GLY	3.1
1	A	873	LEU	3.1
1	A	743	LYS	3.0
1	A	894	LEU	3.0
1	A	955	GLN	3.0
1	A	946	LEU	2.9
1	A	764[A]	HIS	2.9
1	A	947	LYS	2.9
1	A	780	ILE	2.9
1	A	945	HIS	2.9
1	A	963	GLY	2.8

Continued on next page...

Continued from previous page...

Mol	Chain	Res	Type	RSRZ
1	A	749	VAL	2.8
1	A	965	THR	2.8
1	A	770	ILE	2.7
1	A	714	VAL	2.6
1	A	932	LEU	2.6
1	A	721	VAL	2.6
1	A	871	HIS	2.5
1	A	866	VAL	2.4
1	A	958	ALA	2.4
1	A	960	ARG	2.4
1	A	948	LYS	2.4
1	A	722	VAL	2.3
1	A	912	ASN	2.3
1	A	936	GLN	2.3
1	A	926	SER	2.3
1	A	766	GLN	2.3
1	A	700	THR	2.2
1	A	868	LEU	2.2
1	A	927	SER	2.1
1	A	875	VAL	2.1
1	A	961	PRO	2.1
1	A	731	THR	2.0
1	A	717	PHE	2.0

6.2 Non-standard residues in protein, DNA, RNA chains (i)

There are no non-standard protein/DNA/RNA residues in this entry.

6.3 Carbohydrates (i)

There are no carbohydrates in this entry.

6.4 Ligands (i)

In the following table, the Atoms column lists the number of modelled atoms in the group and the number defined in the chemical component dictionary. The B-factors column lists the minimum, median, 95th percentile and maximum values of B factors of atoms in the group. The column labelled 'Q< 0.9' lists the number of atoms with occupancy less than 0.9.

Continued on next page...

Continued from previous page...

Mol	Type	Chain	Res	Atoms	RSCC	RSR	B-factors(Å^2)	Q<0.9

Mol	Type	Chain	Res	Atoms	RSCC	RSR	B-factors(Å^2)	Q<0.9
2	MLI	A	1101	7/7	0.96	0.10	23,31,33,34	0
3	NI	A	1102	1/1	1.00	0.03	22,22,22,22	0

6.5 Other polymers (i)

There are no such residues in this entry.