Full wwPDB X-ray Structure Validation Report (i)

Aug 20, 2023 – 08:44 AM EDT

PDB ID	:	2O3J
Title	:	Structure of Caenorhabditis Elegans UDP-Glucose Dehydrogenase
Authors	:	Zhang, Y.; Zhan, C.; Patskovsky, Y.; Ramagopal, U.; Shi, W.; Toro, R.; Wengerter, B.C.; Milst, S.; Vidal, M.; Burley, S.K.; Almo, S.C.; New York SGX Research Center for Structural Genomics (NYSGXRC)
Deposited on	:	2006-12-01
Resolution	:	1.88 Å(reported)

This is a Full wwPDB X-ray Structure Validation Report for a publicly released PDB entry.

We welcome your comments at *validation@mail.wwpdb.org*
A user guide is available at
https://www.wwpdb.org/validation/2017/XrayValidationReportHelp
with specific help available everywhere you see the (i) symbol.

The types of validation reports are described at
http://www.wwpdb.org/validation/2017/FAQs#types.

The following versions of software and data (see references (i)) were used in the production of this report:

MolProbity	:	4.02b-467
Mogul	:	1.8.5 (274361), CSD as541be (2020)
Xtriage (Phenix)	:	1.13
EDS	:	2.35
Percentile statistics	:	20191225.v01 (using entries in the PDB archive December 25th 2019)
Refmac	:	5.8.0158
CCP4	:	7.0.044 (Gargrove)
Ideal geometry (proteins)	:	Engh & Huber (2001)
Ideal geometry (DNA, RNA)	:	Parkinson et al. (1996)
Validation Pipeline (wwPDB-VP)	:	2.35

1 Overall quality at a glance (i)

The following experimental techniques were used to determine the structure:
X-RAY DIFFRACTION

The reported resolution of this entry is 1.88 Å.

Percentile scores (ranging between 0-100) for global validation metrics of the entry are shown in the following graphic. The table shows the number of entries on which the scores are based.

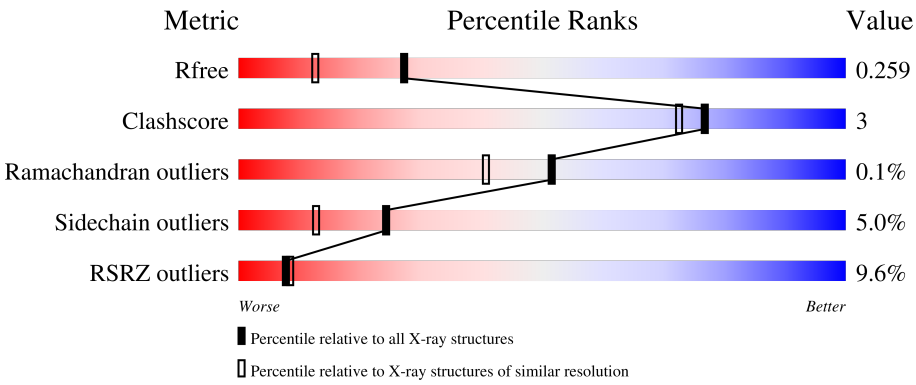

Metric	Whole archive (#Entries)	Similar resolution (#Entries, resolution range(Å))
R_{free}	130704	9470 (1.90-1.86)
Clashscore	141614	10282 (1.90-1.86)
Ramachandran outliers	138981	10152 (1.90-1.86)
Sidechain outliers	138945	10152 (1.90-1.86)
RSRZ outliers	127900	9303 (1.90-1.86)

The table below summarises the geometric issues observed across the polymeric chains and their fit to the electron density. The red, orange, yellow and green segments of the lower bar indicate the fraction of residues that contain outliers for >=3, 2, 1 and 0 types of geometric quality criteria respectively. A grey segment represents the fraction of residues that are not modelled. The numeric value for each fraction is indicated below the corresponding segment, with a dot representing fractions <=5% The upper red bar (where present) indicates the fraction of residues that have poor fit to the electron density. The numeric value is given above the bar.

Mol	Chain	Length	Quality of chain
1	A	481	5% 85% 10% • •
1	B	481	4% 86% 9% • •
1	C	481	19% 84% 12% •

2 Entry composition (i)

There are 3 unique types of molecules in this entry. The entry contains 11766 atoms, of which 0 are hydrogens and 0 are deuteriums.

In the tables below, the ZeroOcc column contains the number of atoms modelled with zero occupancy, the AltConf column contains the number of residues with at least one atom in alternate conformation and the Trace column contains the number of residues modelled with at most 2 atoms.

- Molecule 1 is a protein called UDP-glucose 6-dehydrogenase.

Mol	Chain	Residues	Atoms					ZeroOcc	AltConf	Trace
			Total	C	N	O	S			
1	A	465	3632	2313	616	686	17	0	9	0
1	B	462	3622	2311	616	679	16	0	13	0
1	C	462	3614	2305	618	674	17	0	9	0

- Molecule 2 is GLYCEROL (three-letter code: GOL) (formula: $C_3H_8O_3$).

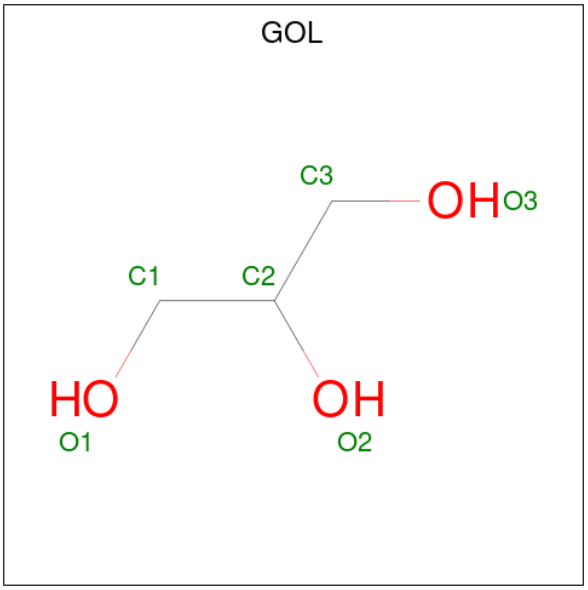

Mol	Chain	Residues	Atoms			ZeroOcc	AltConf
			Total	C	O		
2	A	1	6	3	3	0	0
2	A	1	6	3	3	0	0
2	A	1	6	3	3	0	0

Continued on next page...

Continued from previous page...

Mol	Chain	Residues	Atoms			ZeroOcc	AltConf
			Total	C	O		
2	B	1	6	3	3	0	0
			Total	C	O		
2	B	1	6	3	3	0	0
			Total	C	O		
2	B	1	6	3	3	0	0
			Total	C	O		
2	C	1	6	3	3	0	0
			Total	C	O		
2	C	1	6	3	3	0	0
			Total	C	O		
2	C	1	6	3	3	0	0

- Molecule 3 is water.

Mol	Chain	Residues	Atoms		ZeroOcc	AltConf
			Total	O		
3	A	292	292	292	0	0
			Total	O		
3	B	359	359	359	0	0
			Total	O		
3	C	193	193	193	0	0

3 Residue-property plots (i)

These plots are drawn for all protein, RNA, DNA and oligosaccharide chains in the entry. The first graphic for a chain summarises the proportions of the various outlier classes displayed in the second graphic. The second graphic shows the sequence view annotated by issues in geometry and electron density. Residues are color-coded according to the number of geometric quality criteria for which they contain at least one outlier: green = 0, yellow = 1, orange = 2 and red = 3 or more. A red dot above a residue indicates a poor fit to the electron density (RSRZ > 2). Stretches of 2 or more consecutive residues without any outlier are shown as a green connector. Residues present in the sample, but not in the model, are shown in grey.

• Molecule 1: UDP-glucose 6-dehydrogenase

Chain A:

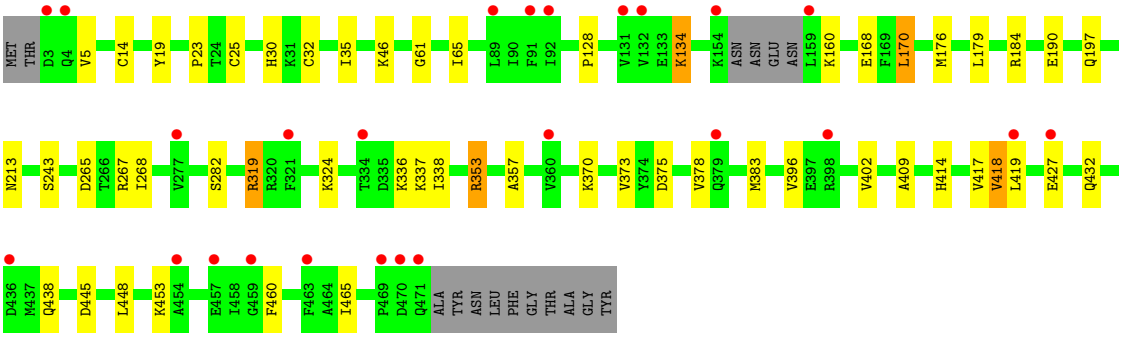

• Molecule 1: UDP-glucose 6-dehydrogenase

Chain B:

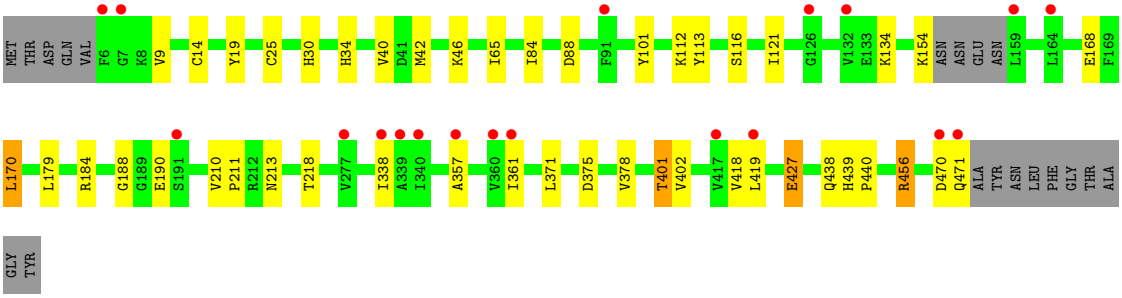

• Molecule 1: UDP-glucose 6-dehydrogenase

Chain C:

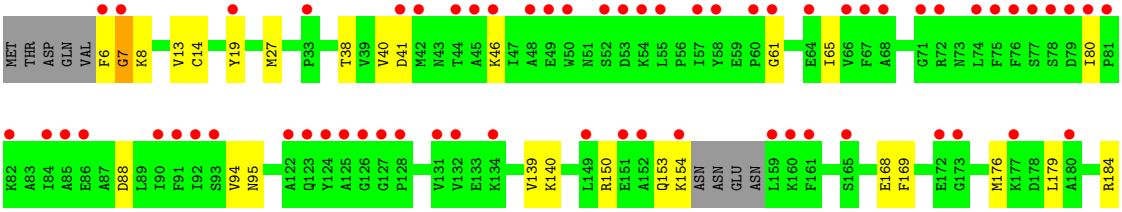

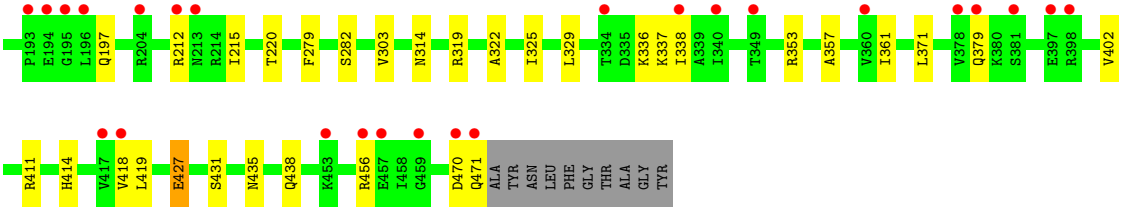
P193
E194
G195
L196
Q197
R204
R212
N213
R214
I215
T220
F279
S282
V303
N314
R319
A322
I325
L329
T334
D335
K336
K337
I338
A339
I340
T349
R353
A357
V360
I361
L371
V378
Q379
K380
S381
E397
R398
V402
R411
H414
V417
V418
L419
E427
S431
N435
Q438
K453
R456
E457
I458
G459
D470
Q471
ALA
TYR
ASN
LEU
PHE
GLY
THR
ALA
GLY
TYR

4 Data and refinement statistics (i)

Property	Value	Source
Space group	C 1 2 1	Depositor
Cell constants a, b, c, α, β, γ	159.72Å 144.09Å 92.07Å 90.00° 123.24° 90.00°	Depositor
Resolution (Å)	20.00 – 1.88 30.36 – 1.88	Depositor EDS
% Data completeness (in resolution range)	98.2 (20.00-1.88) 98.1 (30.36-1.88)	Depositor EDS
R_{merge}	0.06	Depositor
R_{sym}	0.06	Depositor
$< I/\sigma(I) >$ [1]	1.17 (at 1.88Å)	Xtriage
Refinement program	REFMAC 5.2.0019	Depositor
R, R_{free}	0.209 , 0.263 0.207 , 0.259	Depositor DCC
R_{free} test set	4146 reflections (3.02%)	wwPDB-VP
Wilson B-factor (Å^2)	34.9	Xtriage
Anisotropy	0.331	Xtriage
Bulk solvent k_{sol}(e/Å^3), B_{sol}(Å^2)	0.35 , 48.7	EDS
L-test for twinning[2]	$< \|L\| > = 0.49$, $< L^2 > = 0.32$	Xtriage
Estimated twinning fraction	0.021 for -h-2*l,-k,l	Xtriage
F_o,F_c correlation	0.96	EDS
Total number of atoms	11766	wwPDB-VP
Average B, all atoms (Å^2)	45.0	wwPDB-VP

Xtriage's analysis on translational NCS is as follows: *The largest off-origin peak in the Patterson function is 3.44% of the height of the origin peak. No significant pseudotranslation is detected.*

[1]Intensities estimated from amplitudes.

[2]Theoretical values of $< |L| >$, $< L^2 >$ for acentric reflections are 0.5, 0.333 respectively for untwinned datasets, and 0.375, 0.2 for perfectly twinned datasets.

5 Model quality (i)

5.1 Standard geometry (i)

Bond lengths and bond angles in the following residue types are not validated in this section: GOL

The Z score for a bond length (or angle) is the number of standard deviations the observed value is removed from the expected value. A bond length (or angle) with $|Z| > 5$ is considered an outlier worth inspection. RMSZ is the root-mean-square of all Z scores of the bond lengths (or angles).

Mol	Chain	Bond lengths		Bond angles	
		RMSZ	$\#\|Z\|>5$	RMSZ	$\#\|Z\|>5$
1	A	0.45	0/3729	0.55	0/5053
1	B	0.52	0/3731	0.58	0/5055
1	C	0.43	0/3711	0.53	0/5026
All	All	0.47	0/11171	0.55	0/15134

Chiral center outliers are detected by calculating the chiral volume of a chiral center and verifying if the center is modelled as a planar moiety or with the opposite hand.A planarity outlier is detected by checking planarity of atoms in a peptide group, atoms in a mainchain group or atoms of a sidechain that are expected to be planar.

Mol	Chain	#Chirality outliers	#Planarity outliers
1	A	0	2
1	B	0	1
1	C	0	2
All	All	0	5

There are no bond length outliers.

There are no bond angle outliers.

There are no chirality outliers.

All (5) planarity outliers are listed below:

Mol	Chain	Res	Type	Group
1	A	427	GLU	Peptide
1	A	460	PHE	Peptide
1	B	427	GLU	Peptide
1	C	169	PHE	Peptide
1	C	427	GLU	Peptide

5.2 Too-close contacts (i)

In the following table, the Non-H and H(model) columns list the number of non-hydrogen atoms and hydrogen atoms in the chain respectively. The H(added) column lists the number of hydrogen atoms added and optimized by MolProbity. The Clashes column lists the number of clashes within the asymmetric unit, whereas Symm-Clashes lists symmetry-related clashes.

Mol	Chain	Non-H	H(model)	H(added)	Clashes	Symm-Clashes
1	A	3632	0	3658	27	0
1	B	3622	0	3675	19	0
1	C	3614	0	3662	21	0
2	A	18	0	24	1	0
2	B	18	0	24	1	0
2	C	18	0	24	0	0
3	A	292	0	0	1	0
3	B	359	0	0	1	0
3	C	193	0	0	0	0
All	All	11766	0	11067	66	0

The all-atom clashscore is defined as the number of clashes found per 1000 atoms (including hydrogen atoms). The all-atom clashscore for this structure is 3.

All (66) close contacts within the same asymmetric unit are listed below, sorted by their clash magnitude.

Atom-1	Atom-2	Interatomic distance (Å)	Clash overlap (Å)
1:B:170:LEU:HD11	1:B:179:LEU:HG	1.64	0.78
1:B:401:THR:HG23	3:B:909:HOH:O	1.85	0.75
1:A:170:LEU:HD11	1:A:179:LEU:HG	1.68	0.75
1:A:375:ASP:HB3	1:A:378:VAL:HG12	1.71	0.72
1:B:375:ASP:HB3	1:B:378[A]:VAL:HG12	1.72	0.71
1:C:139:VAL:HG12	1:C:140[C]:LYS:HG2	1.77	0.67
1:A:190:GLU:HA	2:A:905:GOL:H2	1.79	0.65
1:A:418:VAL:HG13	1:A:445:ASP:HA	1.79	0.64
1:C:279:PHE:H	1:C:314:ASN:HD21	1.48	0.62
1:C:414:HIS:CE1	1:C:438:GLN:HG2	2.36	0.61
1:A:338:ILE:HD11	1:A:417:VAL:HG21	1.83	0.60
1:C:282:SER:HB3	1:C:353:ARG:HD2	1.83	0.59
1:B:361:ILE:HG23	1:B:371:LEU:HD13	1.85	0.59
1:B:357:ALA:HA	1:B:419:LEU:HD13	1.85	0.58
1:B:30:HIS:HB2	1:B:65:ILE:HG23	1.87	0.56
1:A:5:VAL:H	1:A:197:GLN:HE22	1.52	0.56
1:C:6:PHE:HB2	1:C:197:GLN:HE21	1.71	0.56
1:A:353:ARG:HH11	1:A:353:ARG:HB2	1.71	0.55

Continued on next page...

Continued from previous page...

Atom-1	Atom-2	Interatomic distance (Å)	Clash overlap (Å)
1:A:243:SER:HB2	1:C:303:VAL:HG13	1.89	0.54
1:C:61:GLY:O	1:C:65:ILE:HG12	2.08	0.53
1:A:338:ILE:HD11	1:A:417:VAL:CG2	2.39	0.53
1:A:30:HIS:HB2	1:A:65:ILE:HG23	1.91	0.52
1:C:279:PHE:N	1:C:314:ASN:HD21	2.08	0.52
1:A:336:LYS:HG3	1:A:414:HIS:CD2	2.44	0.51
1:C:212:ARG:HA	1:C:215:ILE:HD12	1.92	0.51
1:A:375:ASP:CB	1:A:378:VAL:HG12	2.39	0.51
1:B:338:ILE:HB	1:B:371:LEU:HD23	1.94	0.50
1:B:84:ILE:HD12	1:B:121:ILE:HG12	1.94	0.50
1:A:282:SER:HB3	1:A:353:ARG:NH1	2.28	0.49
1:C:336:LYS:HG2	1:C:414:HIS:CD2	2.48	0.49
1:C:357:ALA:HA	1:C:419:LEU:HD13	1.96	0.47
1:C:40:VAL:HB	1:C:80:ILE:HG12	1.95	0.47
1:C:6:PHE:HA	1:C:7:GLY:HA3	1.61	0.47
1:C:361:ILE:HG23	1:C:371:LEU:HD13	1.97	0.47
1:B:190:GLU:HA	2:B:906:GOL:H12	1.97	0.47
1:C:150:ARG:HA	1:C:153:GLN:HG2	1.97	0.47
1:B:34:HIS:H	1:B:34:HIS:CD2	2.32	0.47
1:A:357:ALA:HA	1:A:419:LEU:HD13	1.98	0.46
1:B:9:VAL:HG13	1:B:88:ASP:HB2	1.96	0.46
1:A:373:VAL:HB	1:A:383:MET:HE1	1.98	0.45
1:A:32:CYS:HB3	1:A:35:ILE:HD12	1.97	0.45
1:B:439:HIS:HA	1:B:440:PRO:C	2.36	0.45
1:A:265:ASP:HB3	1:A:268:ILE:HD12	1.98	0.45
1:A:134:LYS:HE2	3:A:1147:HOH:O	2.17	0.44
1:C:27:MET:HG2	1:C:179:LEU:HB3	2.00	0.44
1:A:61:GLY:O	1:A:65:ILE:HG12	2.18	0.43
1:A:448:LEU:HD11	1:A:465:ILE:HB	2.00	0.43
1:A:23:PRO:HB3	1:A:176:MET:HE1	2.01	0.43
1:A:128:PRO:HA	1:A:160:LYS:O	2.19	0.43
1:A:337:LYS:HE2	1:A:409:ALA:O	2.19	0.43
1:A:319:ARG:HA	1:A:319:ARG:HD3	1.88	0.42
1:B:375:ASP:CB	1:B:378[A]:VAL:HG12	2.45	0.42
1:B:456:ARG:HH22	1:B:471:GLN:HB2	1.84	0.42
1:B:188:GLY:HA2	1:B:218:THR:O	2.20	0.41
1:C:13:VAL:HG22	1:C:38:THR:HB	2.01	0.41
1:A:336:LYS:HB2	1:A:336:LYS:HE3	1.81	0.41
1:C:337:LYS:NZ	1:C:411:ARG:O	2.42	0.41
1:C:322:ALA:HA	1:C:325:ILE:HD12	2.03	0.41
1:A:14:CYS:HB2	1:A:25:CYS:SG	2.61	0.40

Continued on next page...

Continued from previous page...

Atom-1	Atom-2	Interatomic distance (Å)	Clash overlap (Å)
1:B:112:LYS:HE3	1:B:113:TYR:CZ	2.56	0.40
1:B:210:VAL:HA	1:B:211:PRO:HD2	1.94	0.40
1:A:265:ASP:OD2	1:A:267:ARG:NH2	2.43	0.40
1:B:14:CYS:HB2	1:B:25:CYS:SG	2.61	0.40

There are no symmetry-related clashes.

5.3 Torsion angles (i)

5.3.1 Protein backbone (i)

In the following table, the Percentiles column shows the percent Ramachandran outliers of the chain as a percentile score with respect to all X-ray entries followed by that with respect to entries of similar resolution.

The Analysed column shows the number of residues for which the backbone conformation was analysed, and the total number of residues.

Mol	Chain	Analysed	Favoured	Allowed	Outliers	Percentiles	
1	A	470/481 (98%)	454 (97%)	16 (3%)	0	100	100
1	B	471/481 (98%)	450 (96%)	21 (4%)	0	100	100
1	C	467/481 (97%)	444 (95%)	21 (4%)	2 (0%)	34	22
All	All	1408/1443 (98%)	1348 (96%)	58 (4%)	2 (0%)	51	41

All (2) Ramachandran outliers are listed below:

Mol	Chain	Res	Type
1	C	41	ASP
1	C	7	GLY

5.3.2 Protein sidechains (i)

In the following table, the Percentiles column shows the percent sidechain outliers of the chain as a percentile score with respect to all X-ray entries followed by that with respect to entries of similar resolution.

The Analysed column shows the number of residues for which the sidechain conformation was analysed, and the total number of residues.

Mol	Chain	Analysed	Rotameric	Outliers	Percentiles
1	A	396/399 (99%)	377 (95%)	19 (5%)	25 14
1	B	397/399 (100%)	379 (96%)	18 (4%)	27 16
1	C	393/399 (98%)	370 (94%)	23 (6%)	19 9
All	All	1186/1197 (99%)	1126 (95%)	60 (5%)	24 12

All (60) residues with a non-rotameric sidechain are listed below:

Mol	Chain	Res	Type
1	A	19	TYR
1	A	46	LYS
1	A	134	LYS
1	A	168[A]	GLU
1	A	168[B]	GLU
1	A	170	LEU
1	A	184	ARG
1	A	213	ASN
1	A	319	ARG
1	A	324	LYS
1	A	353	ARG
1	A	370	LYS
1	A	396	VAL
1	A	402	VAL
1	A	418	VAL
1	A	432	GLN
1	A	438[A]	GLN
1	A	438[B]	GLN
1	A	453	LYS
1	B	19	TYR
1	B	42	MET
1	B	46	LYS
1	B	101	TYR
1	B	116	SER
1	B	134	LYS
1	B	154	LYS
1	B	168	GLU
1	B	170	LEU
1	B	184	ARG
1	B	213	ASN
1	B	401	THR
1	B	402	VAL
1	B	418	VAL
1	B	427	GLU

Continued on next page...

Continued from previous page...

Mol	Chain	Res	Type
1	B	438	GLN
1	B	456	ARG
1	B	470	ASP
1	C	8	LYS
1	C	14	CYS
1	C	19	TYR
1	C	46	LYS
1	C	88	ASP
1	C	94	VAL
1	C	95	ASN
1	C	154	LYS
1	C	168	GLU
1	C	176	MET
1	C	184	ARG
1	C	220	THR
1	C	329	LEU
1	C	338	ILE
1	C	379	GLN
1	C	402	VAL
1	C	418	VAL
1	C	427	GLU
1	C	431	SER
1	C	435	ASN
1	C	456	ARG
1	C	470	ASP
1	C	471	GLN

Sometimes sidechains can be flipped to improve hydrogen bonding and reduce clashes. All (18) such sidechains are listed below:

Mol	Chain	Res	Type
1	A	162	GLN
1	A	197	GLN
1	A	299	ASN
1	A	414	HIS
1	A	432	GLN
1	A	452	GLN
1	B	34	HIS
1	B	162	GLN
1	B	166	ASN
1	B	452	GLN
1	C	162	GLN
1	C	166	ASN

Continued on next page...

Continued from previous page...

Mol	Chain	Res	Type
1	C	197	GLN
1	C	231	ASN
1	C	314	ASN
1	C	394	GLN
1	C	414	HIS
1	C	452	GLN

5.3.3 RNA (i)

There are no RNA molecules in this entry.

5.4 Non-standard residues in protein, DNA, RNA chains (i)

There are no non-standard protein/DNA/RNA residues in this entry.

5.5 Carbohydrates (i)

There are no monosaccharides in this entry.

5.6 Ligand geometry (i)

9 ligands are modelled in this entry.

In the following table, the Counts columns list the number of bonds (or angles) for which Mogul statistics could be retrieved, the number of bonds (or angles) that are observed in the model and the number of bonds (or angles) that are defined in the Chemical Component Dictionary. The Link column lists molecule types, if any, to which the group is linked. The Z score for a bond length (or angle) is the number of standard deviations the observed value is removed from the expected value. A bond length (or angle) with $|Z| > 2$ is considered an outlier worth inspection. RMSZ is the root-mean-square of all Z scores of the bond lengths (or angles).

Mol	Type	Chain	Res	Link	Bond lengths			Bond angles		
					Counts	RMSZ	$\#\|Z\| > 2$	Counts	RMSZ	$\#\|Z\| > 2$
2	GOL	C	907	-	5,5,5	0.35	0	5,5,5	0.25	0
2	GOL	A	904	-	5,5,5	0.39	0	5,5,5	0.33	0
2	GOL	A	903	-	5,5,5	0.38	0	5,5,5	0.35	0
2	GOL	B	906	-	5,5,5	0.29	0	5,5,5	0.35	0
2	GOL	A	905	-	5,5,5	0.30	0	5,5,5	0.39	0
2	GOL	C	909	-	5,5,5	0.67	0	5,5,5	0.53	0
2	GOL	B	908	-	5,5,5	0.38	0	5,5,5	0.23	0
2	GOL	B	902	-	5,5,5	0.38	0	5,5,5	0.40	0

Mol	Type	Chain	Res	Link	Bond lengths			Bond angles		
					Counts	RMSZ	$\#\|Z\| > 2$	Counts	RMSZ	$\#\|Z\| > 2$
2	GOL	C	901	-	5,5,5	0.40	0	5,5,5	0.28	0

In the following table, the Chirals column lists the number of chiral outliers, the number of chiral centers analysed, the number of these observed in the model and the number defined in the Chemical Component Dictionary. Similar counts are reported in the Torsion and Rings columns. '-' means no outliers of that kind were identified.

Mol	Type	Chain	Res	Link	Chirals	Torsions	Rings
2	GOL	C	907	-	-	2/4/4/4	-
2	GOL	A	904	-	-	4/4/4/4	-
2	GOL	A	903	-	-	4/4/4/4	-
2	GOL	B	906	-	-	0/4/4/4	-
2	GOL	A	905	-	-	2/4/4/4	-
2	GOL	C	909	-	-	2/4/4/4	-
2	GOL	B	908	-	-	4/4/4/4	-
2	GOL	B	902	-	-	0/4/4/4	-
2	GOL	C	901	-	-	0/4/4/4	-

There are no bond length outliers.

There are no bond angle outliers.

There are no chirality outliers.

All (18) torsion outliers are listed below:

Mol	Chain	Res	Type	Atoms
2	A	903	GOL	O1-C1-C2-O2
2	A	903	GOL	O1-C1-C2-C3
2	A	904	GOL	O1-C1-C2-C3
2	A	904	GOL	C1-C2-C3-O3
2	A	904	GOL	O2-C2-C3-O3
2	A	905	GOL	C1-C2-C3-O3
2	B	908	GOL	C1-C2-C3-O3
2	C	907	GOL	O1-C1-C2-C3
2	C	909	GOL	O1-C1-C2-C3
2	B	908	GOL	O2-C2-C3-O3
2	C	907	GOL	O1-C1-C2-O2
2	B	908	GOL	O1-C1-C2-C3
2	A	905	GOL	O2-C2-C3-O3
2	B	908	GOL	O1-C1-C2-O2
2	C	909	GOL	O1-C1-C2-O2

Continued on next page...

Continued from previous page...

Mol	Chain	Res	Type	Atoms
2	A	904	GOL	O1-C1-C2-O2
2	A	903	GOL	O2-C2-C3-O3
2	A	903	GOL	C1-C2-C3-O3

There are no ring outliers.

2 monomers are involved in 2 short contacts:

Mol	Chain	Res	Type	Clashes	Symm-Clashes
2	B	906	GOL	1	0
2	A	905	GOL	1	0

5.7 Other polymers (i)

There are no such residues in this entry.

5.8 Polymer linkage issues (i)

There are no chain breaks in this entry.

6 Fit of model and data (i)

6.1 Protein, DNA and RNA chains (i)

In the following table, the column labelled '#RSRZ> 2' contains the number (and percentage) of RSRZ outliers, followed by percent RSRZ outliers for the chain as percentile scores relative to all X-ray entries and entries of similar resolution. The OWAB column contains the minimum, median, 95th percentile and maximum values of the occupancy-weighted average B-factor per residue. The column labelled 'Q< 0.9' lists the number of (and percentage) of residues with an average occupancy less than 0.9.

Mol	Chain	Analysed	<RSRZ>	#RSRZ>2			OWAB(Å^2)	Q<0.9
1	A	465/481 (96%)	0.26	25 (5%)	25	27	23, 41, 63, 108	0
1	B	462/481 (96%)	0.20	19 (4%)	37	39	19, 37, 60, 104	0
1	C	462/481 (96%)	0.93	89 (19%)	1	1	23, 53, 74, 105	0
All	All	1389/1443 (96%)	0.46	133 (9%)	8	8	19, 43, 69, 108	0

All (133) RSRZ outliers are listed below:

Mol	Chain	Res	Type	RSRZ
1	C	126	GLY	7.4
1	C	471	GLN	6.6
1	C	124	TYR	6.3
1	C	6	PHE	6.2
1	C	125	ALA	6.0
1	C	50	TRP	5.6
1	C	57	ILE	5.5
1	C	58	TYR	5.4
1	A	470	ASP	5.1
1	A	471	GLN	4.9
1	C	48	ALA	4.8
1	C	127	GLY	4.8
1	A	3	ASP	4.8
1	C	60	PRO	4.7
1	C	72	ARG	4.7
1	C	152	ALA	4.5
1	C	159	LEU	4.4
1	C	379	GLN	4.3
1	C	75	PHE	4.3
1	C	45	ALA	4.3
1	C	154	LYS	4.0
1	C	7	GLY	4.0
1	C	204	ARG	4.0

Continued on next page...

Continued from previous page...

Mol	Chain	Res	Type	RSRZ
1	C	54	LYS	3.9
1	C	53	ASP	3.9
1	C	160	LYS	3.8
1	B	360	VAL	3.7
1	C	417	VAL	3.7
1	C	44	THR	3.6
1	B	471	GLN	3.5
1	C	77	SER	3.5
1	C	378	VAL	3.4
1	C	470	ASP	3.4
1	C	196	LEU	3.4
1	C	55	LEU	3.3
1	C	71	GLY	3.3
1	C	123	GLN	3.2
1	C	82	LYS	3.2
1	B	417	VAL	3.2
1	C	173	GLY	3.2
1	C	66	VAL	3.1
1	C	19	TYR	3.1
1	C	68	ALA	3.1
1	A	131	VAL	3.1
1	B	132	VAL	3.1
1	A	92	ILE	3.1
1	B	91	PHE	3.1
1	C	76	PHE	3.1
1	C	42[A]	MET	3.0
1	C	457	GLU	3.0
1	C	213	ASN	3.0
1	A	91	PHE	3.0
1	B	6	PHE	3.0
1	C	91	PHE	3.0
1	B	470	ASP	3.0
1	B	7	GLY	2.9
1	C	93	SER	2.9
1	C	360	VAL	2.9
1	C	86	GLU	2.9
1	C	381	SER	2.9
1	C	49	GLU	2.8
1	A	132	VAL	2.8
1	A	436	ASP	2.8
1	A	459	GLY	2.8
1	A	360	VAL	2.8

Continued on next page...

Continued from previous page...

Mol	Chain	Res	Type	RSRZ
1	C	78	SER	2.8
1	C	194	GLU	2.8
1	C	134	LYS	2.7
1	B	340	ILE	2.7
1	A	454	ALA	2.7
1	B	361	ILE	2.7
1	C	92	ILE	2.7
1	A	398	ARG	2.7
1	A	419	LEU	2.7
1	C	459	GLY	2.7
1	C	81	PRO	2.7
1	A	4	GLN	2.6
1	B	126	GLY	2.6
1	A	159	LEU	2.6
1	A	379	GLN	2.6
1	A	463[A]	PHE	2.6
1	C	90	ILE	2.6
1	C	340	ILE	2.6
1	C	33	PRO	2.5
1	A	277	VAL	2.5
1	C	52	SER	2.5
1	C	398	ARG	2.5
1	C	85	ALA	2.5
1	C	195	GLY	2.5
1	B	339	ALA	2.4
1	B	357	ALA	2.4
1	C	149	LEU	2.4
1	C	46	LYS	2.4
1	C	212	ARG	2.4
1	C	165[A]	SER	2.4
1	A	469	PRO	2.4
1	B	277	VAL	2.4
1	C	180	ALA	2.4
1	A	154	LYS	2.4
1	C	453	LYS	2.3
1	C	151	GLU	2.3
1	C	338	ILE	2.3
1	A	334	THR	2.3
1	C	80	ILE	2.3
1	C	456	ARG	2.3
1	C	349	THR	2.3
1	B	419	LEU	2.3

Continued on next page...

Continued from previous page...

Mol	Chain	Res	Type	RSRZ
1	C	67	PHE	2.3
1	C	128	PRO	2.3
1	C	193	PRO	2.3
1	C	61	GLY	2.2
1	C	64	GLU	2.2
1	C	122	ALA	2.2
1	B	338	ILE	2.2
1	C	161	PHE	2.2
1	B	191	SER	2.2
1	C	74	LEU	2.2
1	A	427	GLU	2.2
1	C	397	GLU	2.2
1	C	334	THR	2.2
1	C	79	ASP	2.2
1	C	172	GLU	2.2
1	A	321	PHE	2.2
1	C	132	VAL	2.1
1	B	159	LEU	2.1
1	C	41	ASP	2.1
1	B	164	LEU	2.1
1	C	177	LYS	2.0
1	A	457	GLU	2.0
1	C	131	VAL	2.0
1	C	418	VAL	2.0
1	A	89	LEU	2.0
1	C	84	ILE	2.0

6.2 Non-standard residues in protein, DNA, RNA chains (i)

There are no non-standard protein/DNA/RNA residues in this entry.

6.3 Carbohydrates (i)

There are no monosaccharides in this entry.

6.4 Ligands (i)

In the following table, the Atoms column lists the number of modelled atoms in the group and the number defined in the chemical component dictionary. The B-factors column lists the minimum, median, 95th percentile and maximum values of B factors of atoms in the group. The column labelled 'Q< 0.9' lists the number of atoms with occupancy less than 0.9.

Mol	Type	Chain	Res	Atoms	RSCC	RSR	B-factors(Å^2)	Q<0.9
2	GOL	C	909	6/6	0.69	0.22	75,90,91,100	0
2	GOL	C	907	6/6	0.71	0.31	70,76,83,90	0
2	GOL	B	906	6/6	0.82	0.24	46,56,61,69	0
2	GOL	A	905	6/6	0.86	0.17	59,69,74,82	0
2	GOL	A	903	6/6	0.88	0.20	58,68,72,74	0
2	GOL	B	908	6/6	0.89	0.14	45,60,71,73	0
2	GOL	A	904	6/6	0.92	0.21	90,93,96,103	0
2	GOL	C	901	6/6	0.92	0.20	58,65,72,76	0
2	GOL	B	902	6/6	0.95	0.23	45,50,51,64	0

6.5 Other polymers (i)

There are no such residues in this entry.