Full wwPDB X-ray Structure Validation Report (i)

Nov 5, 2023 – 12:26 AM EDT

PDB ID	:	6NQV
Title	:	Crystal structure of fast switching M159T mutant of fluorescent protein Dronpa (Dronpa2), Y63(3-CH3Y)
Authors	:	Lin, C.-Y.; Romei, M.G.; Mathews, I.I.; Boxer, S.G.
Deposited on	:	2019-01-22
Resolution	:	2.70 Å(reported)

This is a Full wwPDB X-ray Structure Validation Report for a publicly released PDB entry.

We welcome your comments at *validation@mail.wwpdb.org*
A user guide is available at
https://www.wwpdb.org/validation/2017/XrayValidationReportHelp
with specific help available everywhere you see the (i) symbol.

The types of validation reports are described at
http://www.wwpdb.org/validation/2017/FAQs#types.

The following versions of software and data (see references (i)) were used in the production of this report:

MolProbity	:	4.02b-467
Mogul	:	1.8.5 (274361), CSD as541be (2020)
Xtriage (Phenix)	:	1.13
EDS	:	2.36
Percentile statistics	:	20191225.v01 (using entries in the PDB archive December 25th 2019)
Refmac	:	5.8.0158
CCP4	:	7.0.044 (Gargrove)
Ideal geometry (proteins)	:	Engh & Huber (2001)
Ideal geometry (DNA, RNA)	:	Parkinson et al. (1996)
Validation Pipeline (wwPDB-VP)	:	2.36

1 Overall quality at a glance (i)

The following experimental techniques were used to determine the structure:
X-RAY DIFFRACTION

The reported resolution of this entry is 2.70 Å.

Percentile scores (ranging between 0-100) for global validation metrics of the entry are shown in the following graphic. The table shows the number of entries on which the scores are based.

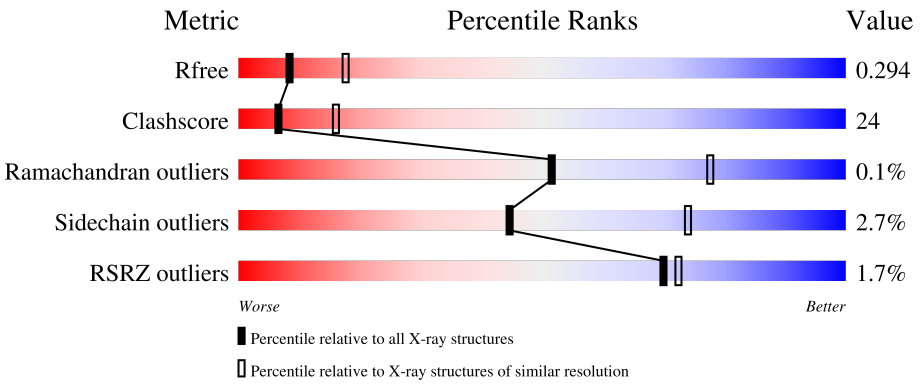

Metric	Whole archive (#Entries)	Similar resolution (#Entries, resolution range(Å))
R_{free}	130704	2808 (2.70-2.70)
Clashscore	141614	3122 (2.70-2.70)
Ramachandran outliers	138981	3069 (2.70-2.70)
Sidechain outliers	138945	3069 (2.70-2.70)
RSRZ outliers	127900	2737 (2.70-2.70)

The table below summarises the geometric issues observed across the polymeric chains and their fit to the electron density. The red, orange, yellow and green segments of the lower bar indicate the fraction of residues that contain outliers for >=3, 2, 1 and 0 types of geometric quality criteria respectively. A grey segment represents the fraction of residues that are not modelled. The numeric value for each fraction is indicated below the corresponding segment, with a dot representing fractions <=5% The upper red bar (where present) indicates the fraction of residues that have poor fit to the electron density. The numeric value is given above the bar.

Mol	Chain	Length	Quality of chain
1	A	255	2% 51% 32% • 15%
1	B	255	% 54% 29% • 16%
1	C	255	2% 61% 23% 15%
1	D	255	2% 57% 26% • 16%
1	E	255	2% 61% 23% • 15%

Continued on next page...

Continued from previous page...

Mol	Chain	Length	Quality of chain
1	F	255	60% 22% • 15%
1	G	255	2% 55% 28% • 15%
1	H	255	% 51% 33% • 15%

The following table lists non-polymeric compounds, carbohydrate monomers and non-standard residues in protein, DNA, RNA chains that are outliers for geometric or electron-density-fit criteria:

Mol	Type	Chain	Res	Chirality	Geometry	Clashes	Electron density
1	KZY	B	63	-	-	X	-
1	KZY	C	63	-	-	X	-

2 Entry composition (i)

There are 2 unique types of molecules in this entry. The entry contains 13951 atoms, of which 0 are hydrogens and 0 are deuteriums.

In the tables below, the ZeroOcc column contains the number of atoms modelled with zero occupancy, the AltConf column contains the number of residues with at least one atom in alternate conformation and the Trace column contains the number of residues modelled with at most 2 atoms.

- Molecule 1 is a protein called Fluorescent protein Dronpa.

Mol	Chain	Residues	Atoms					ZeroOcc	AltConf	Trace
			Total	C	N	O	S			
1	A	217	1723	1099	289	326	9	0	1	0
1	B	215	1711	1094	288	320	9	0	0	0
1	C	216	1714	1097	285	323	9	0	0	0
1	D	215	1712	1096	284	323	9	0	0	0
1	E	217	1726	1105	285	327	9	0	1	0
1	F	217	1736	1112	289	326	9	0	1	0
1	G	217	1727	1104	290	324	9	0	0	0
1	H	217	1731	1105	289	328	9	0	1	0

There are 328 discrepancies between the modelled and reference sequences:

Chain	Residue	Modelled	Actual	Comment	Reference
A	-27	GLY	-	expression tag	UNP Q5TLG6
A	-26	SER	-	expression tag	UNP Q5TLG6
A	-25	SER	-	expression tag	UNP Q5TLG6
A	-24	HIS	-	expression tag	UNP Q5TLG6
A	-23	HIS	-	expression tag	UNP Q5TLG6
A	-22	HIS	-	expression tag	UNP Q5TLG6
A	-21	HIS	-	expression tag	UNP Q5TLG6
A	-20	HIS	-	expression tag	UNP Q5TLG6
A	-19	HIS	-	expression tag	UNP Q5TLG6
A	-18	SER	-	expression tag	UNP Q5TLG6
A	-17	SER	-	expression tag	UNP Q5TLG6
A	-16	GLY	-	expression tag	UNP Q5TLG6
A	-15	LEU	-	expression tag	UNP Q5TLG6

Continued on next page...

Continued from previous page...

Chain	Residue	Modelled	Actual	Comment	Reference
A	-14	VAL	-	expression tag	UNP Q5TLG6
A	-13	PRO	-	expression tag	UNP Q5TLG6
A	-12	GLY	-	expression tag	UNP Q5TLG6
A	-11	GLY	-	expression tag	UNP Q5TLG6
A	-10	SER	-	expression tag	UNP Q5TLG6
A	-9	HIS	-	expression tag	UNP Q5TLG6
A	-8	MET	-	expression tag	UNP Q5TLG6
A	-7	VAL	-	expression tag	UNP Q5TLG6
A	-6	SER	-	expression tag	UNP Q5TLG6
A	-5	LYS	-	expression tag	UNP Q5TLG6
A	-4	GLY	-	expression tag	UNP Q5TLG6
A	-3	GLU	-	expression tag	UNP Q5TLG6
A	-2	GLU	-	expression tag	UNP Q5TLG6
A	-1	ASN	-	expression tag	UNP Q5TLG6
A	0	ASN	-	expression tag	UNP Q5TLG6
A	1	MET	-	expression tag	UNP Q5TLG6
A	2	ALA	-	expression tag	UNP Q5TLG6
A	63	KZY	CYS	chromophore	UNP Q5TLG6
A	63	KZY	TYR	chromophore	UNP Q5TLG6
A	63	KZY	GLY	chromophore	UNP Q5TLG6
A	159	THR	MET	engineered mutation	UNP Q5TLG6
A	218	GLY	GLU	engineered mutation	UNP Q5TLG6
A	224	MET	-	expression tag	UNP Q5TLG6
A	225	ASP	-	expression tag	UNP Q5TLG6
A	226	GLU	-	expression tag	UNP Q5TLG6
A	227	LEU	-	expression tag	UNP Q5TLG6
A	228	TYR	-	expression tag	UNP Q5TLG6
A	229	LYS	-	expression tag	UNP Q5TLG6
B	-27	GLY	-	expression tag	UNP Q5TLG6
B	-26	SER	-	expression tag	UNP Q5TLG6
B	-25	SER	-	expression tag	UNP Q5TLG6
B	-24	HIS	-	expression tag	UNP Q5TLG6
B	-23	HIS	-	expression tag	UNP Q5TLG6
B	-22	HIS	-	expression tag	UNP Q5TLG6
B	-21	HIS	-	expression tag	UNP Q5TLG6
B	-20	HIS	-	expression tag	UNP Q5TLG6
B	-19	HIS	-	expression tag	UNP Q5TLG6
B	-18	SER	-	expression tag	UNP Q5TLG6
B	-17	SER	-	expression tag	UNP Q5TLG6
B	-16	GLY	-	expression tag	UNP Q5TLG6
B	-15	LEU	-	expression tag	UNP Q5TLG6
B	-14	VAL	-	expression tag	UNP Q5TLG6

Continued on next page...

Continued from previous page...

Chain	Residue	Modelled	Actual	Comment	Reference
B	-13	PRO	-	expression tag	UNP Q5TLG6
B	-12	GLY	-	expression tag	UNP Q5TLG6
B	-11	GLY	-	expression tag	UNP Q5TLG6
B	-10	SER	-	expression tag	UNP Q5TLG6
B	-9	HIS	-	expression tag	UNP Q5TLG6
B	-8	MET	-	expression tag	UNP Q5TLG6
B	-7	VAL	-	expression tag	UNP Q5TLG6
B	-6	SER	-	expression tag	UNP Q5TLG6
B	-5	LYS	-	expression tag	UNP Q5TLG6
B	-4	GLY	-	expression tag	UNP Q5TLG6
B	-3	GLU	-	expression tag	UNP Q5TLG6
B	-2	GLU	-	expression tag	UNP Q5TLG6
B	-1	ASN	-	expression tag	UNP Q5TLG6
B	0	ASN	-	expression tag	UNP Q5TLG6
B	1	MET	-	expression tag	UNP Q5TLG6
B	2	ALA	-	expression tag	UNP Q5TLG6
B	63	KZY	CYS	chromophore	UNP Q5TLG6
B	63	KZY	TYR	chromophore	UNP Q5TLG6
B	63	KZY	GLY	chromophore	UNP Q5TLG6
B	159	THR	MET	engineered mutation	UNP Q5TLG6
B	218	GLY	GLU	engineered mutation	UNP Q5TLG6
B	224	MET	-	expression tag	UNP Q5TLG6
B	225	ASP	-	expression tag	UNP Q5TLG6
B	226	GLU	-	expression tag	UNP Q5TLG6
B	227	LEU	-	expression tag	UNP Q5TLG6
B	228	TYR	-	expression tag	UNP Q5TLG6
B	229	LYS	-	expression tag	UNP Q5TLG6
C	-27	GLY	-	expression tag	UNP Q5TLG6
C	-26	SER	-	expression tag	UNP Q5TLG6
C	-25	SER	-	expression tag	UNP Q5TLG6
C	-24	HIS	-	expression tag	UNP Q5TLG6
C	-23	HIS	-	expression tag	UNP Q5TLG6
C	-22	HIS	-	expression tag	UNP Q5TLG6
C	-21	HIS	-	expression tag	UNP Q5TLG6
C	-20	HIS	-	expression tag	UNP Q5TLG6
C	-19	HIS	-	expression tag	UNP Q5TLG6
C	-18	SER	-	expression tag	UNP Q5TLG6
C	-17	SER	-	expression tag	UNP Q5TLG6
C	-16	GLY	-	expression tag	UNP Q5TLG6
C	-15	LEU	-	expression tag	UNP Q5TLG6
C	-14	VAL	-	expression tag	UNP Q5TLG6
C	-13	PRO	-	expression tag	UNP Q5TLG6

Continued on next page...

Continued from previous page...

Chain	Residue	Modelled	Actual	Comment	Reference
C	-12	GLY	-	expression tag	UNP Q5TLG6
C	-11	GLY	-	expression tag	UNP Q5TLG6
C	-10	SER	-	expression tag	UNP Q5TLG6
C	-9	HIS	-	expression tag	UNP Q5TLG6
C	-8	MET	-	expression tag	UNP Q5TLG6
C	-7	VAL	-	expression tag	UNP Q5TLG6
C	-6	SER	-	expression tag	UNP Q5TLG6
C	-5	LYS	-	expression tag	UNP Q5TLG6
C	-4	GLY	-	expression tag	UNP Q5TLG6
C	-3	GLU	-	expression tag	UNP Q5TLG6
C	-2	GLU	-	expression tag	UNP Q5TLG6
C	-1	ASN	-	expression tag	UNP Q5TLG6
C	0	ASN	-	expression tag	UNP Q5TLG6
C	1	MET	-	expression tag	UNP Q5TLG6
C	2	ALA	-	expression tag	UNP Q5TLG6
C	63	KZY	CYS	chromophore	UNP Q5TLG6
C	63	KZY	TYR	chromophore	UNP Q5TLG6
C	63	KZY	GLY	chromophore	UNP Q5TLG6
C	159	THR	MET	engineered mutation	UNP Q5TLG6
C	218	GLY	GLU	engineered mutation	UNP Q5TLG6
C	224	MET	-	expression tag	UNP Q5TLG6
C	225	ASP	-	expression tag	UNP Q5TLG6
C	226	GLU	-	expression tag	UNP Q5TLG6
C	227	LEU	-	expression tag	UNP Q5TLG6
C	228	TYR	-	expression tag	UNP Q5TLG6
C	229	LYS	-	expression tag	UNP Q5TLG6
D	-27	GLY	-	expression tag	UNP Q5TLG6
D	-26	SER	-	expression tag	UNP Q5TLG6
D	-25	SER	-	expression tag	UNP Q5TLG6
D	-24	HIS	-	expression tag	UNP Q5TLG6
D	-23	HIS	-	expression tag	UNP Q5TLG6
D	-22	HIS	-	expression tag	UNP Q5TLG6
D	-21	HIS	-	expression tag	UNP Q5TLG6
D	-20	HIS	-	expression tag	UNP Q5TLG6
D	-19	HIS	-	expression tag	UNP Q5TLG6
D	-18	SER	-	expression tag	UNP Q5TLG6
D	-17	SER	-	expression tag	UNP Q5TLG6
D	-16	GLY	-	expression tag	UNP Q5TLG6
D	-15	LEU	-	expression tag	UNP Q5TLG6
D	-14	VAL	-	expression tag	UNP Q5TLG6
D	-13	PRO	-	expression tag	UNP Q5TLG6
D	-12	GLY	-	expression tag	UNP Q5TLG6

Continued on next page...

Continued from previous page...

Chain	Residue	Modelled	Actual	Comment	Reference
D	-11	GLY	-	expression tag	UNP Q5TLG6
D	-10	SER	-	expression tag	UNP Q5TLG6
D	-9	HIS	-	expression tag	UNP Q5TLG6
D	-8	MET	-	expression tag	UNP Q5TLG6
D	-7	VAL	-	expression tag	UNP Q5TLG6
D	-6	SER	-	expression tag	UNP Q5TLG6
D	-5	LYS	-	expression tag	UNP Q5TLG6
D	-4	GLY	-	expression tag	UNP Q5TLG6
D	-3	GLU	-	expression tag	UNP Q5TLG6
D	-2	GLU	-	expression tag	UNP Q5TLG6
D	-1	ASN	-	expression tag	UNP Q5TLG6
D	0	ASN	-	expression tag	UNP Q5TLG6
D	1	MET	-	expression tag	UNP Q5TLG6
D	2	ALA	-	expression tag	UNP Q5TLG6
D	63	KZY	CYS	chromophore	UNP Q5TLG6
D	63	KZY	TYR	chromophore	UNP Q5TLG6
D	63	KZY	GLY	chromophore	UNP Q5TLG6
D	159	THR	MET	engineered mutation	UNP Q5TLG6
D	218	GLY	GLU	engineered mutation	UNP Q5TLG6
D	224	MET	-	expression tag	UNP Q5TLG6
D	225	ASP	-	expression tag	UNP Q5TLG6
D	226	GLU	-	expression tag	UNP Q5TLG6
D	227	LEU	-	expression tag	UNP Q5TLG6
D	228	TYR	-	expression tag	UNP Q5TLG6
D	229	LYS	-	expression tag	UNP Q5TLG6
E	-27	GLY	-	expression tag	UNP Q5TLG6
E	-26	SER	-	expression tag	UNP Q5TLG6
E	-25	SER	-	expression tag	UNP Q5TLG6
E	-24	HIS	-	expression tag	UNP Q5TLG6
E	-23	HIS	-	expression tag	UNP Q5TLG6
E	-22	HIS	-	expression tag	UNP Q5TLG6
E	-21	HIS	-	expression tag	UNP Q5TLG6
E	-20	HIS	-	expression tag	UNP Q5TLG6
E	-19	HIS	-	expression tag	UNP Q5TLG6
E	-18	SER	-	expression tag	UNP Q5TLG6
E	-17	SER	-	expression tag	UNP Q5TLG6
E	-16	GLY	-	expression tag	UNP Q5TLG6
E	-15	LEU	-	expression tag	UNP Q5TLG6
E	-14	VAL	-	expression tag	UNP Q5TLG6
E	-13	PRO	-	expression tag	UNP Q5TLG6
E	-12	GLY	-	expression tag	UNP Q5TLG6
E	-11	GLY	-	expression tag	UNP Q5TLG6

Continued on next page...

Continued from previous page...

Chain	Residue	Modelled	Actual	Comment	Reference
E	-10	SER	-	expression tag	UNP Q5TLG6
E	-9	HIS	-	expression tag	UNP Q5TLG6
E	-8	MET	-	expression tag	UNP Q5TLG6
E	-7	VAL	-	expression tag	UNP Q5TLG6
E	-6	SER	-	expression tag	UNP Q5TLG6
E	-5	LYS	-	expression tag	UNP Q5TLG6
E	-4	GLY	-	expression tag	UNP Q5TLG6
E	-3	GLU	-	expression tag	UNP Q5TLG6
E	-2	GLU	-	expression tag	UNP Q5TLG6
E	-1	ASN	-	expression tag	UNP Q5TLG6
E	0	ASN	-	expression tag	UNP Q5TLG6
E	1	MET	-	expression tag	UNP Q5TLG6
E	2	ALA	-	expression tag	UNP Q5TLG6
E	63	KZY	CYS	chromophore	UNP Q5TLG6
E	63	KZY	TYR	chromophore	UNP Q5TLG6
E	63	KZY	GLY	chromophore	UNP Q5TLG6
E	159	THR	MET	engineered mutation	UNP Q5TLG6
E	218	GLY	GLU	engineered mutation	UNP Q5TLG6
E	224	MET	-	expression tag	UNP Q5TLG6
E	225	ASP	-	expression tag	UNP Q5TLG6
E	226	GLU	-	expression tag	UNP Q5TLG6
E	227	LEU	-	expression tag	UNP Q5TLG6
E	228	TYR	-	expression tag	UNP Q5TLG6
E	229	LYS	-	expression tag	UNP Q5TLG6
F	-27	GLY	-	expression tag	UNP Q5TLG6
F	-26	SER	-	expression tag	UNP Q5TLG6
F	-25	SER	-	expression tag	UNP Q5TLG6
F	-24	HIS	-	expression tag	UNP Q5TLG6
F	-23	HIS	-	expression tag	UNP Q5TLG6
F	-22	HIS	-	expression tag	UNP Q5TLG6
F	-21	HIS	-	expression tag	UNP Q5TLG6
F	-20	HIS	-	expression tag	UNP Q5TLG6
F	-19	HIS	-	expression tag	UNP Q5TLG6
F	-18	SER	-	expression tag	UNP Q5TLG6
F	-17	SER	-	expression tag	UNP Q5TLG6
F	-16	GLY	-	expression tag	UNP Q5TLG6
F	-15	LEU	-	expression tag	UNP Q5TLG6
F	-14	VAL	-	expression tag	UNP Q5TLG6
F	-13	PRO	-	expression tag	UNP Q5TLG6
F	-12	GLY	-	expression tag	UNP Q5TLG6
F	-11	GLY	-	expression tag	UNP Q5TLG6
F	-10	SER	-	expression tag	UNP Q5TLG6

Continued on next page...

Continued from previous page...

Chain	Residue	Modelled	Actual	Comment	Reference
F	-9	HIS	-	expression tag	UNP Q5TLG6
F	-8	MET	-	expression tag	UNP Q5TLG6
F	-7	VAL	-	expression tag	UNP Q5TLG6
F	-6	SER	-	expression tag	UNP Q5TLG6
F	-5	LYS	-	expression tag	UNP Q5TLG6
F	-4	GLY	-	expression tag	UNP Q5TLG6
F	-3	GLU	-	expression tag	UNP Q5TLG6
F	-2	GLU	-	expression tag	UNP Q5TLG6
F	-1	ASN	-	expression tag	UNP Q5TLG6
F	0	ASN	-	expression tag	UNP Q5TLG6
F	1	MET	-	expression tag	UNP Q5TLG6
F	2	ALA	-	expression tag	UNP Q5TLG6
F	63	KZY	CYS	chromophore	UNP Q5TLG6
F	63	KZY	TYR	chromophore	UNP Q5TLG6
F	63	KZY	GLY	chromophore	UNP Q5TLG6
F	159	THR	MET	engineered mutation	UNP Q5TLG6
F	218	GLY	GLU	engineered mutation	UNP Q5TLG6
F	224	MET	-	expression tag	UNP Q5TLG6
F	225	ASP	-	expression tag	UNP Q5TLG6
F	226	GLU	-	expression tag	UNP Q5TLG6
F	227	LEU	-	expression tag	UNP Q5TLG6
F	228	TYR	-	expression tag	UNP Q5TLG6
F	229	LYS	-	expression tag	UNP Q5TLG6
G	-27	GLY	-	expression tag	UNP Q5TLG6
G	-26	SER	-	expression tag	UNP Q5TLG6
G	-25	SER	-	expression tag	UNP Q5TLG6
G	-24	HIS	-	expression tag	UNP Q5TLG6
G	-23	HIS	-	expression tag	UNP Q5TLG6
G	-22	HIS	-	expression tag	UNP Q5TLG6
G	-21	HIS	-	expression tag	UNP Q5TLG6
G	-20	HIS	-	expression tag	UNP Q5TLG6
G	-19	HIS	-	expression tag	UNP Q5TLG6
G	-18	SER	-	expression tag	UNP Q5TLG6
G	-17	SER	-	expression tag	UNP Q5TLG6
G	-16	GLY	-	expression tag	UNP Q5TLG6
G	-15	LEU	-	expression tag	UNP Q5TLG6
G	-14	VAL	-	expression tag	UNP Q5TLG6
G	-13	PRO	-	expression tag	UNP Q5TLG6
G	-12	GLY	-	expression tag	UNP Q5TLG6
G	-11	GLY	-	expression tag	UNP Q5TLG6
G	-10	SER	-	expression tag	UNP Q5TLG6
G	-9	HIS	-	expression tag	UNP Q5TLG6

Continued on next page...

Continued from previous page...

Chain	Residue	Modelled	Actual	Comment	Reference
G	-8	MET	-	expression tag	UNP Q5TLG6
G	-7	VAL	-	expression tag	UNP Q5TLG6
G	-6	SER	-	expression tag	UNP Q5TLG6
G	-5	LYS	-	expression tag	UNP Q5TLG6
G	-4	GLY	-	expression tag	UNP Q5TLG6
G	-3	GLU	-	expression tag	UNP Q5TLG6
G	-2	GLU	-	expression tag	UNP Q5TLG6
G	-1	ASN	-	expression tag	UNP Q5TLG6
G	0	ASN	-	expression tag	UNP Q5TLG6
G	1	MET	-	expression tag	UNP Q5TLG6
G	2	ALA	-	expression tag	UNP Q5TLG6
G	63	KZY	CYS	chromophore	UNP Q5TLG6
G	63	KZY	TYR	chromophore	UNP Q5TLG6
G	63	KZY	GLY	chromophore	UNP Q5TLG6
G	159	THR	MET	engineered mutation	UNP Q5TLG6
G	218	GLY	GLU	engineered mutation	UNP Q5TLG6
G	224	MET	-	expression tag	UNP Q5TLG6
G	225	ASP	-	expression tag	UNP Q5TLG6
G	226	GLU	-	expression tag	UNP Q5TLG6
G	227	LEU	-	expression tag	UNP Q5TLG6
G	228	TYR	-	expression tag	UNP Q5TLG6
G	229	LYS	-	expression tag	UNP Q5TLG6
H	-27	GLY	-	expression tag	UNP Q5TLG6
H	-26	SER	-	expression tag	UNP Q5TLG6
H	-25	SER	-	expression tag	UNP Q5TLG6
H	-24	HIS	-	expression tag	UNP Q5TLG6
H	-23	HIS	-	expression tag	UNP Q5TLG6
H	-22	HIS	-	expression tag	UNP Q5TLG6
H	-21	HIS	-	expression tag	UNP Q5TLG6
H	-20	HIS	-	expression tag	UNP Q5TLG6
H	-19	HIS	-	expression tag	UNP Q5TLG6
H	-18	SER	-	expression tag	UNP Q5TLG6
H	-17	SER	-	expression tag	UNP Q5TLG6
H	-16	GLY	-	expression tag	UNP Q5TLG6
H	-15	LEU	-	expression tag	UNP Q5TLG6
H	-14	VAL	-	expression tag	UNP Q5TLG6
H	-13	PRO	-	expression tag	UNP Q5TLG6
H	-12	GLY	-	expression tag	UNP Q5TLG6
H	-11	GLY	-	expression tag	UNP Q5TLG6
H	-10	SER	-	expression tag	UNP Q5TLG6
H	-9	HIS	-	expression tag	UNP Q5TLG6
H	-8	MET	-	expression tag	UNP Q5TLG6

Continued on next page...

Continued from previous page...

Chain	Residue	Modelled	Actual	Comment	Reference
H	-7	VAL	-	expression tag	UNP Q5TLG6
H	-6	SER	-	expression tag	UNP Q5TLG6
H	-5	LYS	-	expression tag	UNP Q5TLG6
H	-4	GLY	-	expression tag	UNP Q5TLG6
H	-3	GLU	-	expression tag	UNP Q5TLG6
H	-2	GLU	-	expression tag	UNP Q5TLG6
H	-1	ASN	-	expression tag	UNP Q5TLG6
H	0	ASN	-	expression tag	UNP Q5TLG6
H	1	MET	-	expression tag	UNP Q5TLG6
H	2	ALA	-	expression tag	UNP Q5TLG6
H	63	KZY	CYS	chromophore	UNP Q5TLG6
H	63	KZY	TYR	chromophore	UNP Q5TLG6
H	63	KZY	GLY	chromophore	UNP Q5TLG6
H	159	THR	MET	engineered mutation	UNP Q5TLG6
H	218	GLY	GLU	engineered mutation	UNP Q5TLG6
H	224	MET	-	expression tag	UNP Q5TLG6
H	225	ASP	-	expression tag	UNP Q5TLG6
H	226	GLU	-	expression tag	UNP Q5TLG6
H	227	LEU	-	expression tag	UNP Q5TLG6
H	228	TYR	-	expression tag	UNP Q5TLG6
H	229	LYS	-	expression tag	UNP Q5TLG6

- Molecule 2 is water.

Mol	Chain	Residues	Atoms		ZeroOcc	AltConf
			Total	O		
2	A	23	23	23	0	0
			Total	O		
2	B	28	28	28	0	0
			Total	O		
2	C	18	18	18	0	0
			Total	O		
2	D	23	23	23	0	0
			Total	O		
2	E	19	19	19	0	0
			Total	O		
2	F	21	21	21	0	0
			Total	O		
2	G	19	19	19	0	0
			Total	O		
2	H	20	20	20	0	0

3 Residue-property plots (i)

These plots are drawn for all protein, RNA, DNA and oligosaccharide chains in the entry. The first graphic for a chain summarises the proportions of the various outlier classes displayed in the second graphic. The second graphic shows the sequence view annotated by issues in geometry and electron density. Residues are color-coded according to the number of geometric quality criteria for which they contain at least one outlier: green = 0, yellow = 1, orange = 2 and red = 3 or more. A red dot above a residue indicates a poor fit to the electron density (RSRZ > 2). Stretches of 2 or more consecutive residues without any outlier are shown as a green connector. Residues present in the sample, but not in the model, are shown in grey.

• Molecule 1: Fluorescent protein Dronpa

Chain A:

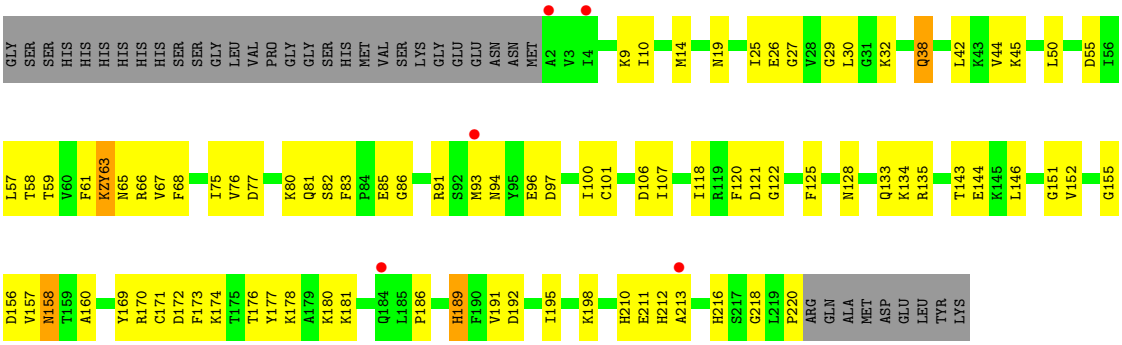

• Molecule 1: Fluorescent protein Dronpa

Chain B:

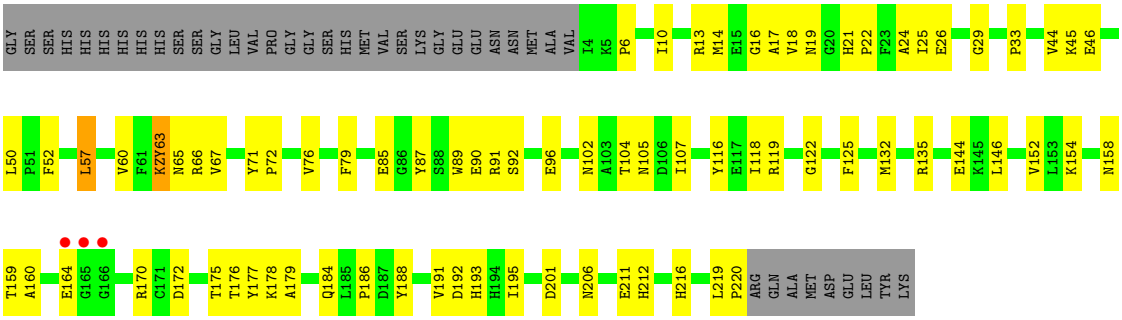

• Molecule 1: Fluorescent protein Dronpa

Chain C:

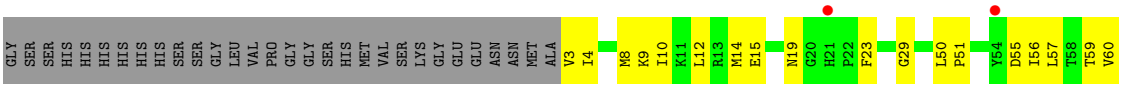

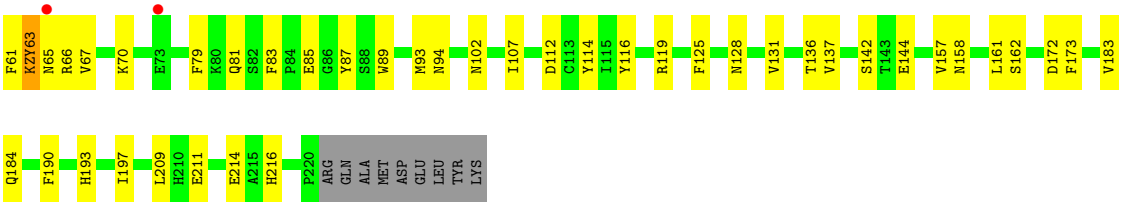

• Molecule 1: Fluorescent protein Dronpa

Chain D:

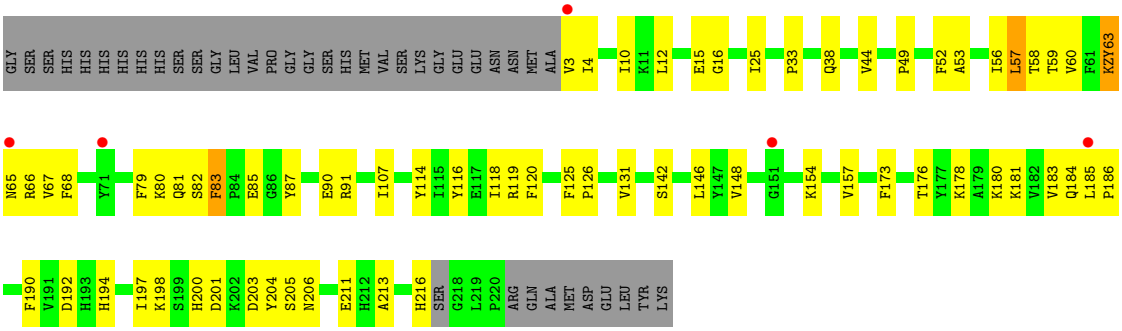

• Molecule 1: Fluorescent protein Dronpa

Chain E:

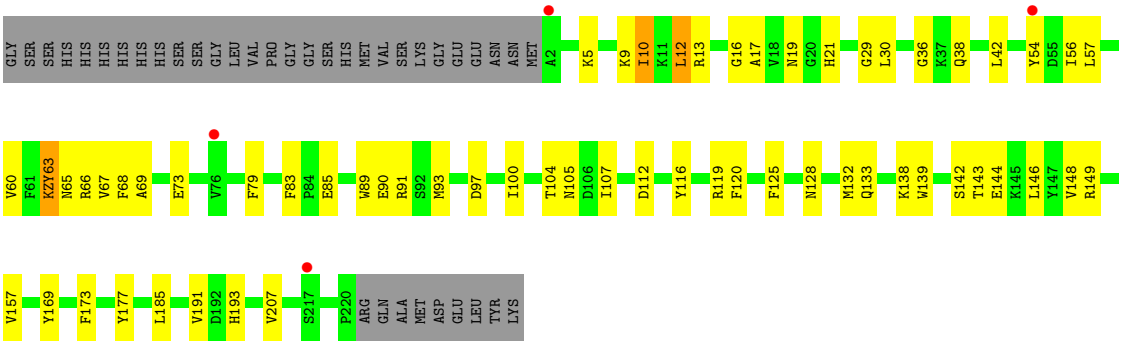

• Molecule 1: Fluorescent protein Dronpa

Chain F:

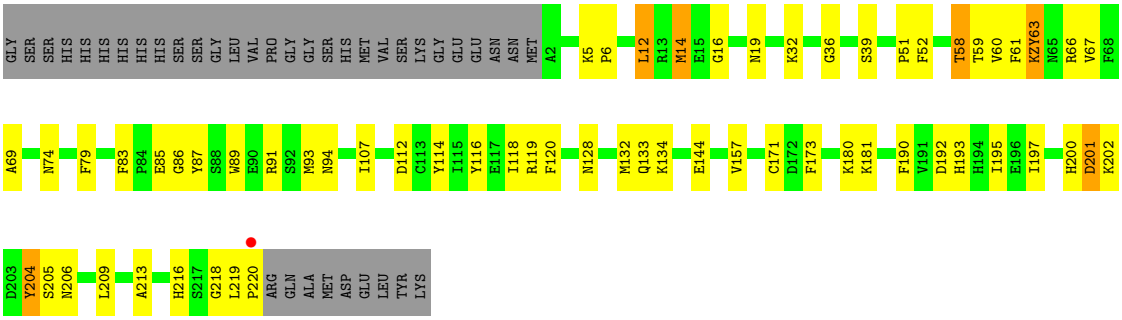

• Molecule 1: Fluorescent protein Dronpa

Chain G:

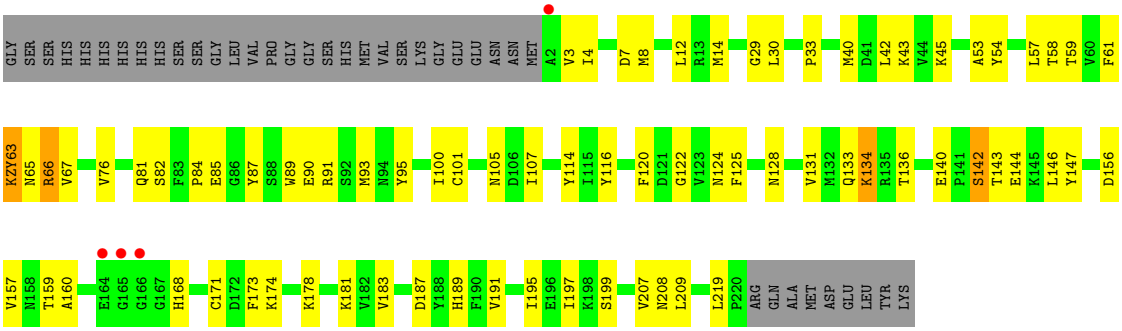

• Molecule 1: Fluorescent protein Dronpa

Chain H:

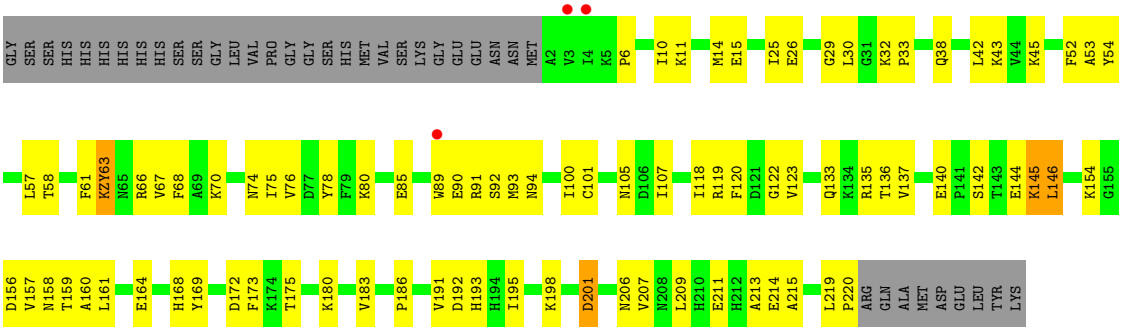

4 Data and refinement statistics (i)

Property	Value	Source
Space group	P 1 21 1	Depositor
Cell constants a, b, c, α, β, γ	79.99Å 85.73Å 143.01Å 90.00° 94.91° 90.00°	Depositor
Resolution (Å)	39.34 – 2.70 39.85 – 2.70	Depositor EDS
% Data completeness (in resolution range)	97.0 (39.34-2.70) 82.0 (39.85-2.70)	Depositor EDS
R_{merge}	(Not available)	Depositor
R_{sym}	(Not available)	Depositor
$< I/\sigma(I) >$ [1]	1.26 (at 2.69Å)	Xtriage
Refinement program	PHENIX (1.13rc2_2986: ???)	Depositor
R, R_{free}	0.255 , 0.295 0.261 , 0.294	Depositor DCC
R_{free} test set	1974 reflections (3.81%)	wwPDB-VP
Wilson B-factor (Å^2)	35.9	Xtriage
Anisotropy	1.135	Xtriage
Bulk solvent k_{sol}(e/Å^3), B_{sol}(Å^2)	0.25 , 26.1	EDS
L-test for twinning[2]	$< \|L\| > = 0.49$, $< L^2 > = 0.32$	Xtriage
Estimated twinning fraction	No twinning to report.	Xtriage
F_o,F_c correlation	0.92	EDS
Total number of atoms	13951	wwPDB-VP
Average B, all atoms (Å^2)	52.0	wwPDB-VP

Xtriage's analysis on translational NCS is as follows: *The analyses of the Patterson function reveals a significant off-origin peak that is 53.14 % of the origin peak, indicating pseudo-translational symmetry. The chance of finding a peak of this or larger height randomly in a structure without pseudo-translational symmetry is equal to 4.3988e-05. The detected translational NCS is most likely also responsible for the elevated intensity ratio.*

[1]Intensities estimated from amplitudes.

[2]Theoretical values of $< |L| >$, $< L^2 >$ for acentric reflections are 0.5, 0.333 respectively for untwinned datasets, and 0.375, 0.2 for perfectly twinned datasets.

5 Model quality (i)

5.1 Standard geometry (i)

Bond lengths and bond angles in the following residue types are not validated in this section: KZY

The Z score for a bond length (or angle) is the number of standard deviations the observed value is removed from the expected value. A bond length (or angle) with $|Z| > 5$ is considered an outlier worth inspection. RMSZ is the root-mean-square of all Z scores of the bond lengths (or angles).

Mol	Chain	Bond lengths		Bond angles	
		RMSZ	$\#\|Z\| >5$	RMSZ	$\#\|Z\| >5$
1	A	0.58	0/1750	0.68	0/2370
1	B	0.70	0/1735	0.75	0/2349
1	C	0.63	0/1738	0.68	0/2354
1	D	0.45	0/1735	0.67	0/2349
1	E	0.51	0/1752	0.65	0/2371
1	F	0.67	0/1763	0.72	0/2383
1	G	0.59	0/1751	0.67	0/2370
1	H	0.54	0/1758	0.69	0/2380
All	All	0.59	0/13982	0.69	0/18926

Chiral center outliers are detected by calculating the chiral volume of a chiral center and verifying if the center is modelled as a planar moiety or with the opposite hand.A planarity outlier is detected by checking planarity of atoms in a peptide group, atoms in a mainchain group or atoms of a sidechain that are expected to be planar.

Mol	Chain	#Chirality outliers	#Planarity outliers
1	D	0	1

There are no bond length outliers.

There are no bond angle outliers.

There are no chirality outliers.

All (1) planarity outliers are listed below:

Mol	Chain	Res	Type	Group
1	D	83	PHE	Peptide

5.2 Too-close contacts (i)

In the following table, the Non-H and H(model) columns list the number of non-hydrogen atoms and hydrogen atoms in the chain respectively. The H(added) column lists the number of hydrogen atoms added and optimized by MolProbity. The Clashes column lists the number of clashes within the asymmetric unit, whereas Symm-Clashes lists symmetry-related clashes.

Mol	Chain	Non-H	H(model)	H(added)	Clashes	Symm-Clashes
1	A	1723	0	1598	73	2
1	B	1711	0	1598	80	0
1	C	1714	0	1596	96	0
1	D	1712	0	1593	74	5
1	E	1726	0	1620	68	1
1	F	1736	0	1641	82	5
1	G	1727	0	1621	83	1
1	H	1731	0	1613	88	0
2	A	23	0	0	4	0
2	B	28	0	0	2	0
2	C	18	0	0	0	0
2	D	23	0	0	4	0
2	E	19	0	0	1	0
2	F	21	0	0	4	0
2	G	19	0	0	4	0
2	H	20	0	0	0	0
All	All	13951	0	12880	633	7

The all-atom clashscore is defined as the number of clashes found per 1000 atoms (including hydrogen atoms). The all-atom clashscore for this structure is 24.

All (633) close contacts within the same asymmetric unit are listed below, sorted by their clash magnitude.

Atom-1	Atom-2	Interatomic distance (Å)	Clash overlap (Å)
1:A:63:KZY:CA1	1:A:63:KZY:N1	1.68	1.55
1:H:63:KZY:CA1	1:H:63:KZY:N1	1.68	1.55
1:G:63:KZY:N1	1:G:63:KZY:CA1	1.68	1.53
1:E:63:KZY:N1	1:E:63:KZY:CA1	1.68	1.53
1:B:63:KZY:N1	1:B:63:KZY:CA1	1.68	1.52
1:D:63:KZY:N1	1:D:63:KZY:CA1	1.68	1.52
1:F:63:KZY:CA1	1:F:63:KZY:N1	1.68	1.52
1:C:63:KZY:N1	1:C:63:KZY:CA1	1.68	1.51
1:C:10:ILE:HG22	1:C:29:GLY:C	1.44	1.36
1:C:10:ILE:CG2	1:C:29:GLY:O	1.79	1.28
1:F:201:ASP:OD2	1:F:206:ASN:N	1.73	1.19

Continued on next page...

Continued from previous page...

Atom-1	Atom-2	Interatomic distance (Å)	Clash overlap (Å)
1:G:40:MET:CE	1:G:42:LEU:HD21	1.75	1.15
1:C:10:ILE:CG2	1:C:29:GLY:C	2.15	1.13
1:H:159:THR:HG22	1:H:160:ALA:N	1.60	1.12
1:C:10:ILE:HG22	1:C:29:GLY:O	0.96	1.11
1:C:10:ILE:HD11	1:C:116:TYR:CE2	1.86	1.10
1:G:57:LEU:HD23	1:G:120:PHE:CZ	1.87	1.09
1:H:89:TRP:CE2	1:H:105:ASN:HB3	1.87	1.08
1:E:56:ILE:HG13	1:E:57:LEU:HD13	1.33	1.07
1:B:195:ILE:HD12	1:B:211:GLU:HB2	1.34	1.06
1:G:40:MET:HE1	1:G:42:LEU:HD21	1.35	1.04
1:A:152:VAL:HG21	1:A:178:LYS:HG2	1.40	1.03
1:F:52:PHE:HB3	1:F:132:MET:HE1	1.37	1.03
1:B:52:PHE:HE1	1:B:57:LEU:HD21	1.25	1.01
1:C:107:ILE:HD12	1:C:116:TYR:CE1	1.93	1.01
1:G:53:ALA:HA	1:G:134:LYS:HE2	1.41	1.01
1:A:152:VAL:CG2	1:A:178:LYS:HG2	1.91	1.00
1:H:159:THR:HG22	1:H:160:ALA:H	1.22	1.00
1:F:66:ARG:HG2	1:F:79:PHE:CZ	1.97	0.98
1:H:159:THR:CG2	1:H:160:ALA:H	1.77	0.97
1:C:65:ASN:OD1	1:C:107:ILE:HD13	1.66	0.96
1:A:76:VAL:HG22	1:A:186:PRO:HB3	1.46	0.94
1:D:194:HIS:HA	2:D:311:HOH:O	1.66	0.94
1:H:89:TRP:HE1	1:H:105:ASN:ND2	1.65	0.94
1:A:144:GLU:HB3	1:A:191:VAL:HG23	1.50	0.94
1:H:159:THR:CG2	1:H:160:ALA:N	2.28	0.94
1:H:93:MET:O	1:H:100:ILE:HD12	1.68	0.93
1:H:89:TRP:NE1	1:H:105:ASN:HB3	1.84	0.93
1:B:52:PHE:CE1	1:B:57:LEU:HD21	2.03	0.92
1:G:4:ILE:HD11	1:G:114:TYR:OH	1.68	0.92
1:G:14:MET:HE1	1:G:57:LEU:HD13	1.52	0.92
1:F:59:THR:HG22	1:F:91:ARG:HH12	1.35	0.91
1:F:59:THR:HG22	1:F:91:ARG:NH1	1.85	0.90
1:C:107:ILE:CD1	1:C:116:TYR:HE1	1.84	0.90
1:F:201:ASP:CG	1:F:206:ASN:H	1.74	0.89
1:C:10:ILE:HD11	1:C:116:TYR:CZ	2.07	0.89
1:D:52:PHE:CE1	1:D:57:LEU:HD21	2.09	0.88
1:C:81:GLN:HB3	1:C:183:VAL:HG11	1.52	0.88
1:D:67:VAL:HG21	1:D:83:PHE:HE2	1.38	0.87
1:G:40:MET:CE	1:G:42:LEU:CD2	2.52	0.87
1:E:56:ILE:HG13	1:E:57:LEU:CD1	2.04	0.86
1:C:10:ILE:CD1	1:C:116:TYR:OH	2.23	0.86

Continued on next page...

Continued from previous page...

Atom-1	Atom-2	Interatomic distance (Å)	Clash overlap (Å)
1:A:25:ILE:HD11	1:A:61:PHE:CZ	2.11	0.86
1:F:14:MET:HE2	1:F:61:PHE:CE2	2.11	0.86
1:C:190:PHE:HB2	1:C:216:HIS:CE1	2.09	0.86
1:F:132:MET:CE	1:F:132:MET:HA	2.06	0.85
1:B:102:ASN:HD21	1:H:100:ILE:HG23	1.41	0.85
1:C:107:ILE:HD12	1:C:116:TYR:HE1	1.35	0.85
1:D:59:THR:HG21	1:D:173:PHE:HE2	1.42	0.84
1:B:219:LEU:HD12	1:B:220:PRO:HD2	1.58	0.84
1:C:87:TYR:O	1:C:107:ILE:HG22	1.76	0.84
1:F:107:ILE:HD11	1:F:114:TYR:HB3	1.60	0.84
1:B:65:ASN:OD1	1:B:107:ILE:HD13	1.77	0.84
1:G:143:THR:O	1:G:157:VAL:HG23	1.78	0.84
1:G:57:LEU:CD2	1:G:120:PHE:CZ	2.61	0.83
1:G:57:LEU:HD23	1:G:120:PHE:CE2	2.13	0.83
1:H:158:ASN:OD1	1:H:172:ASP:OD1	1.96	0.82
1:C:3:VAL:HG13	1:C:4:ILE:HD12	1.61	0.82
1:D:157:VAL:HG12	1:D:173:PHE:HB2	1.61	0.82
1:F:52:PHE:HB3	1:F:132:MET:CE	2.10	0.81
1:D:190:PHE:HB2	1:D:216:HIS:CE1	2.14	0.81
1:A:25:ILE:HD11	1:A:61:PHE:HZ	1.44	0.81
1:A:152:VAL:HG21	1:A:178:LYS:CG	2.11	0.80
1:G:93:MET:O	1:G:100:ILE:HD12	1.82	0.80
1:A:144:GLU:HB3	1:A:191:VAL:CG2	2.12	0.80
1:D:52:PHE:HE1	1:D:57:LEU:HD21	1.44	0.79
1:E:67:VAL:HG11	1:E:83:PHE:HE1	1.48	0.79
1:G:14:MET:HE3	1:G:57:LEU:HD22	1.64	0.79
1:E:138:LYS:NZ	1:E:139:TRP:O	2.17	0.78
1:F:66:ARG:HG2	1:F:79:PHE:CE2	2.18	0.78
1:H:157:VAL:HG13	1:H:173:PHE:HB2	1.66	0.78
1:C:10:ILE:HD11	1:C:116:TYR:HE2	1.47	0.77
1:C:142:SER:HB3	1:C:193:HIS:HB2	1.65	0.77
1:E:57:LEU:CD1	1:E:120:PHE:CZ	2.68	0.77
1:C:10:ILE:HD12	1:C:116:TYR:OH	1.85	0.77
1:D:67:VAL:HG21	1:D:83:PHE:CE2	2.19	0.76
1:E:57:LEU:HD11	1:E:120:PHE:CZ	2.20	0.76
1:A:65:ASN:OD1	1:A:107:ILE:CD1	2.33	0.76
1:C:65:ASN:OD1	1:C:107:ILE:CD1	2.34	0.76
1:G:14:MET:CE	1:G:57:LEU:HD13	2.16	0.76
1:F:59:THR:HG21	1:F:173:PHE:CE2	2.20	0.76
1:H:89:TRP:HE1	1:H:105:ASN:HD22	1.31	0.76
1:C:144:GLU:HA	1:C:157:VAL:HG22	1.69	0.75

Continued on next page...

Continued from previous page...

Atom-1	Atom-2	Interatomic distance (Å)	Clash overlap (Å)
1:D:3:VAL:HG13	1:D:4:ILE:H	1.52	0.75
1:H:42:LEU:HD22	1:H:61:PHE:CE1	2.22	0.74
1:D:33:PRO:HB2	1:D:80:LYS:HE3	1.70	0.74
1:E:42:LEU:HB2	1:E:207:VAL:HG23	1.70	0.74
1:C:59:THR:HG21	1:C:173:PHE:HE2	1.53	0.74
1:D:66:ARG:CG	1:D:79:PHE:CE2	2.70	0.73
1:C:136:THR:CG2	1:C:161:LEU:HD22	2.18	0.73
1:C:10:ILE:HG23	1:C:29:GLY:N	2.04	0.73
1:G:144:GLU:OE2	2:G:301:HOH:O	2.07	0.73
1:E:146:LEU:HD11	1:E:191:VAL:HG23	1.70	0.72
1:G:159:THR:HG22	1:G:160:ALA:H	1.53	0.72
1:H:85:GLU:O	1:H:180:LYS:NZ	2.22	0.72
1:G:57:LEU:CD2	1:G:120:PHE:CE1	2.73	0.71
1:H:58:THR:HG23	1:H:209:LEU:HD11	1.73	0.71
1:H:89:TRP:NE1	1:H:105:ASN:ND2	2.38	0.71
1:F:132:MET:HA	1:F:132:MET:HE2	1.71	0.71
1:H:94:ASN:HA	1:H:100:ILE:HD13	1.73	0.71
1:C:55:ASP:OD2	1:C:136:THR:CG2	2.39	0.70
1:C:55:ASP:OD2	1:C:136:THR:HG22	1.91	0.70
1:E:5:LYS:HE3	1:E:112:ASP:HB3	1.72	0.70
1:F:67:VAL:HG11	1:F:83:PHE:HE1	1.55	0.70
1:H:89:TRP:CE2	1:H:105:ASN:CB	2.72	0.70
1:C:119:ARG:HH12	1:E:119:ARG:NH1	1.90	0.70
1:F:52:PHE:CB	1:F:132:MET:HE1	2.18	0.70
1:C:63:KZY:CB1	1:C:211:GLU:OE1	2.40	0.70
1:C:136:THR:HG21	1:C:161:LEU:HD22	1.74	0.70
1:C:10:ILE:CG2	1:C:29:GLY:CA	2.69	0.70
1:C:10:ILE:CD1	1:C:116:TYR:CZ	2.74	0.70
1:C:63:KZY:N1	1:C:63:KZY:CB1	2.54	0.70
1:F:63:KZY:N1	1:F:63:KZY:CB1	2.54	0.70
1:F:119:ARG:HD2	1:F:120:PHE:H	1.57	0.69
1:D:67:VAL:HG22	1:D:79:PHE:HB3	1.73	0.69
1:D:63:KZY:N1	1:D:63:KZY:C1	2.55	0.69
1:D:65:ASN:OD1	1:D:107:ILE:HD13	1.92	0.69
1:E:63:KZY:N1	1:E:63:KZY:C1	2.55	0.69
1:B:201:ASP:OD2	1:B:206:ASN:N	2.22	0.68
1:H:42:LEU:HD22	1:H:61:PHE:CD1	2.28	0.68
1:C:157:VAL:HG12	1:C:158:ASN:N	2.09	0.68
1:B:154:LYS:NZ	2:B:303:HOH:O	2.23	0.68
1:C:107:ILE:CD1	1:C:116:TYR:CE1	2.65	0.68
1:G:76:VAL:CG1	2:G:302:HOH:O	2.41	0.68

Continued on next page...

Continued from previous page...

Atom-1	Atom-2	Interatomic distance (Å)	Clash overlap (Å)
1:E:10:ILE:HD11	1:E:68:PHE:CZ	2.29	0.67
1:B:188:TYR:O	2:B:302:HOH:O	2.12	0.67
1:C:125:PHE:HE1	1:C:131:VAL:HG21	1.58	0.67
1:F:201:ASP:OD1	1:F:204:TYR:HA	1.95	0.67
1:A:91:ARG:HD2	1:A:93:MET:HE3	1.76	0.67
1:F:14:MET:CE	1:F:61:PHE:CZ	2.78	0.67
1:E:128:ASN:HA	1:E:133:GLN:OE1	1.95	0.67
1:H:63:KZY:N1	1:H:63:KZY:CB1	2.54	0.67
1:A:63:KZY:N1	1:A:63:KZY:CB1	2.54	0.67
1:B:146:LEU:CD2	1:B:177:TYR:CE1	2.78	0.67
1:B:152:VAL:HG21	1:B:178:LYS:HG2	1.77	0.67
1:C:63:KZY:N1	1:C:63:KZY:C1	2.54	0.67
1:E:63:KZY:N1	1:E:63:KZY:CB1	2.54	0.67
1:F:66:ARG:NH1	1:F:193:HIS:HE1	1.92	0.67
1:B:63:KZY:N1	1:B:63:KZY:CB1	2.54	0.66
1:F:63:KZY:N1	1:F:63:KZY:C1	2.55	0.66
1:H:63:KZY:N1	1:H:63:KZY:C1	2.55	0.66
1:D:63:KZY:N1	1:D:63:KZY:CB1	2.54	0.66
1:D:66:ARG:HG2	1:D:79:PHE:CE2	2.30	0.66
1:A:63:KZY:N1	1:A:63:KZY:C1	2.55	0.66
1:G:146:LEU:HD13	1:G:189:HIS:NE2	2.11	0.66
1:B:146:LEU:HD23	1:B:177:TYR:HE1	1.61	0.66
1:H:144:GLU:HB3	1:H:191:VAL:HG13	1.78	0.66
1:H:219:LEU:HD23	1:H:220:PRO:HD2	1.77	0.66
1:B:63:KZY:CB1	1:B:195:ILE:HD11	2.26	0.66
1:E:65:ASN:HB3	1:E:68:PHE:CD2	2.31	0.65
1:F:14:MET:HE2	1:F:61:PHE:CZ	2.31	0.65
1:A:59:THR:HG23	1:A:93:MET:HE1	1.78	0.65
1:C:81:GLN:HB3	1:C:183:VAL:CG1	2.23	0.65
1:G:63:KZY:N1	1:G:63:KZY:CB1	2.54	0.65
1:A:65:ASN:OD1	1:A:107:ILE:HD13	1.96	0.65
1:E:10:ILE:HD13	1:E:116:TYR:OH	1.97	0.65
1:G:63:KZY:N1	1:G:63:KZY:C1	2.54	0.65
1:A:80:LYS:NZ	2:A:302:HOH:O	2.27	0.65
1:B:195:ILE:CD1	1:B:211:GLU:HB2	2.21	0.65
1:F:59:THR:HG21	1:F:173:PHE:HE2	1.59	0.65
1:G:40:MET:HE2	1:G:42:LEU:HD21	1.75	0.64
1:H:195:ILE:HG13	1:H:211:GLU:HB2	1.78	0.64
1:E:57:LEU:HD12	1:E:120:PHE:CZ	2.32	0.64
1:A:152:VAL:HG23	1:A:178:LYS:HG2	1.75	0.64
1:E:57:LEU:HD12	1:E:120:PHE:CE1	2.32	0.64

Continued on next page...

Continued from previous page...

Atom-1	Atom-2	Interatomic distance (Å)	Clash overlap (Å)
1:B:63:KZY:N1	1:B:63:KZY:C1	2.55	0.64
1:F:94:ASN:N	2:F:303:HOH:O	2.30	0.64
1:F:144:GLU:HG3	1:F:157:VAL:HG22	1.78	0.64
1:G:53:ALA:HA	1:G:134:LYS:CE	2.23	0.64
1:D:201:ASP:OD2	1:D:204:TYR:CA	2.46	0.64
1:G:53:ALA:CA	1:G:134:LYS:HE2	2.23	0.63
1:C:190:PHE:CB	1:C:216:HIS:CE1	2.81	0.63
1:E:17:ALA:HA	1:E:21:HIS:O	1.97	0.63
1:D:201:ASP:OD2	1:D:204:TYR:HA	1.97	0.63
1:G:12:LEU:HB2	1:G:116:TYR:HB2	1.79	0.63
1:C:10:ILE:HD11	1:C:116:TYR:OH	1.92	0.63
1:D:79:PHE:O	1:D:82:SER:OG	2.13	0.62
1:D:201:ASP:OD1	1:D:206:ASN:N	2.32	0.62
1:G:125:PHE:CD1	1:G:131:VAL:HG21	2.34	0.62
1:B:144:GLU:HB3	1:B:191:VAL:HG23	1.79	0.62
1:C:102:ASN:HD21	1:E:100:ILE:HG22	1.64	0.62
1:D:59:THR:HG21	1:D:173:PHE:CE2	2.29	0.62
1:D:157:VAL:CG1	1:D:173:PHE:HB2	2.28	0.62
1:G:42:LEU:HD13	1:G:61:PHE:CE1	2.33	0.62
1:H:93:MET:C	1:H:100:ILE:HD12	2.19	0.62
1:H:89:TRP:HE1	1:H:107:ILE:HD11	1.65	0.62
1:D:200:HIS:CE1	1:D:204:TYR:CZ	2.87	0.62
1:F:66:ARG:CG	1:F:79:PHE:CE2	2.82	0.62
1:A:76:VAL:HG22	1:A:186:PRO:CB	2.26	0.62
1:H:89:TRP:NE1	1:H:105:ASN:CB	2.61	0.61
1:H:140:GLU:OE2	1:H:168:HIS:NE2	2.29	0.61
1:A:106:ASP:OD1	1:A:180:LYS:NZ	2.33	0.61
1:E:56:ILE:CG1	1:E:57:LEU:HD13	2.22	0.61
1:G:76:VAL:HG13	2:G:302:HOH:O	2.01	0.61
1:C:107:ILE:HD12	1:C:116:TYR:CD1	2.35	0.61
1:D:201:ASP:CG	1:D:206:ASN:H	2.03	0.61
1:A:25:ILE:HG22	1:A:44:VAL:HA	1.83	0.61
1:B:63:KZY:CE2	1:B:193:HIS:ND1	2.64	0.61
1:C:10:ILE:N	1:C:29:GLY:O	2.34	0.61
1:E:66:ARG:HG2	1:E:79:PHE:CE2	2.36	0.61
1:F:201:ASP:OD1	1:F:204:TYR:CA	2.48	0.60
1:G:65:ASN:OD1	1:G:107:ILE:CD1	2.49	0.60
1:F:67:VAL:HG11	1:F:83:PHE:CE1	2.36	0.60
1:B:146:LEU:CD2	1:B:177:TYR:HE1	2.14	0.60
1:C:10:ILE:HG23	1:C:29:GLY:CA	2.31	0.60
1:B:17:ALA:HA	1:B:21:HIS:O	2.00	0.60

Continued on next page...

Continued from previous page...

Atom-1	Atom-2	Interatomic distance (Å)	Clash overlap (Å)
1:C:63:KZY:C2	1:C:66:ARG:HH22	2.15	0.60
1:E:65:ASN:HB3	1:E:68:PHE:CE2	2.36	0.59
1:B:104:THR:HG22	1:B:119:ARG:HB3	1.84	0.59
1:G:157:VAL:HG12	1:G:173:PHE:HB2	1.84	0.59
1:H:94:ASN:HA	1:H:100:ILE:CD1	2.31	0.59
1:B:24:ALA:HB3	1:B:46:GLU:HG3	1.83	0.59
1:A:156:ASP:OD2	1:A:174:LYS:HD3	2.02	0.59
1:G:65:ASN:OD1	1:G:107:ILE:HD13	2.02	0.58
1:C:59:THR:HG21	1:C:173:PHE:CE2	2.37	0.58
1:C:157:VAL:CG1	1:C:158:ASN:N	2.67	0.58
1:G:82:SER:HA	1:G:181:LYS:HE2	1.86	0.58
1:C:70:LYS:HB3	1:C:214:GLU:HG2	1.84	0.58
1:D:194:HIS:CA	2:D:311:HOH:O	2.36	0.58
1:G:29:GLY:HA3	1:G:40:MET:HB3	1.86	0.58
1:E:67:VAL:HG11	1:E:83:PHE:CE1	2.33	0.57
1:H:14:MET:HB2	1:H:118:ILE:HB	1.86	0.57
1:A:65:ASN:OD1	1:A:107:ILE:HD12	2.03	0.57
1:A:160:ALA:HA	1:A:170:ARG:HA	1.85	0.57
1:D:142:SER:OG	1:D:157:VAL:HG21	2.04	0.57
1:D:83:PHE:CE2	1:D:114:TYR:HE1	2.21	0.57
1:F:132:MET:HA	1:F:132:MET:HE3	1.86	0.57
1:B:146:LEU:HD23	1:B:177:TYR:CE1	2.39	0.57
1:C:107:ILE:HD11	1:C:116:TYR:HE1	1.66	0.57
1:G:63:KZY:N1	1:G:63:KZY:SG1	2.78	0.57
1:H:53:ALA:HB1	1:H:136:THR:HG21	1.87	0.57
1:F:14:MET:HE2	1:F:61:PHE:HE2	1.67	0.57
1:C:63:KZY:N1	1:C:63:KZY:SG1	2.78	0.57
1:B:63:KZY:N1	1:B:63:KZY:SG1	2.78	0.57
1:C:60:VAL:HG13	1:C:89:TRP:HH2	1.70	0.57
1:F:63:KZY:N1	1:F:63:KZY:SG1	2.78	0.57
1:F:66:ARG:HB3	1:F:79:PHE:CD1	2.40	0.57
1:H:144:GLU:HB3	1:H:191:VAL:CG1	2.35	0.57
1:D:4:ILE:HG21	1:D:33:PRO:HG3	1.87	0.56
1:D:63:KZY:N1	1:D:63:KZY:SG1	2.78	0.56
1:H:63:KZY:O2	1:H:91:ARG:NH2	2.34	0.56
1:E:65:ASN:CB	1:E:68:PHE:CE2	2.88	0.56
1:G:85:GLU:N	1:G:85:GLU:OE1	2.39	0.56
1:H:67:VAL:O	1:H:80:LYS:NZ	2.37	0.56
1:B:63:KZY:CZ	1:B:193:HIS:ND1	2.68	0.56
1:E:63:KZY:N1	1:E:63:KZY:SG1	2.78	0.56
1:B:135:ARG:HG3	1:B:164:GLU:HB3	1.88	0.56

Continued on next page...

Continued from previous page...

Atom-1	Atom-2	Interatomic distance (Å)	Clash overlap (Å)
1:H:63:KZY:N1	1:H:63:KZY:SG1	2.78	0.56
1:H:89:TRP:NE1	1:H:107:ILE:HD11	2.20	0.56
1:E:19:ASN:OD1	1:E:125:PHE:HB2	2.05	0.56
1:A:216:HIS:CE1	2:A:317:HOH:O	2.58	0.56
1:A:63:KZY:N1	1:A:63:KZY:SG1	2.78	0.56
1:B:76:VAL:HG11	1:B:184:GLN:O	2.06	0.56
1:D:58:THR:HG21	1:D:197:ILE:HD11	1.86	0.56
1:C:63:KZY:CB2	1:C:66:ARG:HH22	2.19	0.55
1:E:54:TYR:CE1	1:E:207:VAL:HG21	2.41	0.55
1:H:91:ARG:HG3	1:H:175:THR:OG1	2.05	0.55
1:G:143:THR:O	1:G:157:VAL:CG2	2.54	0.55
1:A:158:ASN:HB2	1:A:172:ASP:HA	1.89	0.55
1:F:59:THR:CG2	1:F:91:ARG:HH12	2.15	0.55
1:A:38:GLN:O	1:A:38:GLN:HG2	2.06	0.55
1:F:12:LEU:HB2	1:F:116:TYR:HB2	1.89	0.55
1:F:66:ARG:CG	1:F:79:PHE:CZ	2.83	0.55
1:F:132:MET:CE	1:F:132:MET:CA	2.82	0.55
1:B:67:VAL:HG13	1:B:79:PHE:HB3	1.88	0.55
1:E:65:ASN:CB	1:E:68:PHE:HE2	2.20	0.55
1:F:67:VAL:HG12	1:F:79:PHE:HB3	1.87	0.55
1:C:67:VAL:HG21	1:C:83:PHE:HE2	1.72	0.55
1:C:66:ARG:HG2	1:C:79:PHE:CZ	2.42	0.54
1:E:142:SER:HB3	1:E:193:HIS:HB2	1.89	0.54
1:F:218:GLY:O	1:F:220:PRO:HD3	2.07	0.54
1:E:66:ARG:NH2	1:E:177:TYR:OH	2.19	0.54
1:H:38:GLN:NE2	1:H:63:KZY:SG1	2.80	0.54
1:A:32:LYS:NZ	2:A:306:HOH:O	2.40	0.54
1:F:59:THR:CG2	1:F:91:ARG:NH1	2.65	0.54
1:H:70:LYS:HB3	1:H:214:GLU:HG2	1.90	0.54
1:C:190:PHE:CD2	1:C:216:HIS:CE1	2.96	0.53
1:F:144:GLU:HG3	1:F:157:VAL:CG2	2.38	0.53
1:B:90:GLU:HB3	1:H:123:VAL:HG13	1.89	0.53
1:E:19:ASN:OD1	1:E:132:MET:CE	2.56	0.53
1:E:42:LEU:HB2	1:E:207:VAL:CG2	2.38	0.53
1:F:107:ILE:CD1	1:F:116:TYR:CE2	2.92	0.53
1:D:190:PHE:CB	1:D:216:HIS:CE1	2.89	0.53
1:F:190:PHE:HB2	1:F:216:HIS:CE1	2.43	0.53
1:G:146:LEU:HB2	1:G:189:HIS:CE1	2.43	0.53
1:C:125:PHE:CE1	1:C:131:VAL:HG21	2.42	0.53
1:B:60:VAL:HG13	1:B:89:TRP:HH2	1.74	0.53
1:D:201:ASP:OD1	1:D:205:SER:HB2	2.09	0.53

Continued on next page...

Continued from previous page...

Atom-1	Atom-2	Interatomic distance (Å)	Clash overlap (Å)
1:F:200:HIS:ND1	1:F:204:TYR:CE2	2.77	0.53
1:E:66:ARG:O	1:E:66:ARG:HG3	2.09	0.53
1:G:57:LEU:CD2	1:G:120:PHE:CE2	2.88	0.53
1:G:57:LEU:HD21	1:G:120:PHE:CE1	2.43	0.53
1:H:89:TRP:CZ2	1:H:105:ASN:CB	2.92	0.53
1:A:9:LYS:HA	1:A:30:LEU:HA	1.91	0.52
1:F:107:ILE:HD13	1:F:116:TYR:CE2	2.44	0.52
1:A:27:GLY:HA3	1:A:42:LEU:HD23	1.89	0.52
1:G:140:GLU:OE1	1:G:168:HIS:NE2	2.26	0.52
1:G:197:ILE:O	1:G:197:ILE:HG22	2.10	0.52
1:A:218:GLY:O	1:A:220:PRO:HD3	2.10	0.52
1:D:63:KZY:CD2	1:D:63:KZY:N2	2.72	0.52
1:E:63:KZY:CD2	1:E:63:KZY:N2	2.72	0.52
1:F:107:ILE:HD12	1:F:116:TYR:HD2	1.74	0.52
1:C:67:VAL:HG21	1:C:83:PHE:CE2	2.44	0.52
1:B:146:LEU:CD1	1:B:191:VAL:HG22	2.39	0.52
1:C:10:ILE:HG23	1:C:29:GLY:H	1.74	0.52
1:C:14:MET:HE2	1:C:61:PHE:CZ	2.45	0.52
1:G:63:KZY:N2	1:G:63:KZY:CD2	2.72	0.52
1:H:89:TRP:CZ2	1:H:105:ASN:HB3	2.42	0.52
1:E:148:VAL:HG11	1:E:185:LEU:HD13	1.92	0.52
1:A:143:THR:O	1:A:143:THR:HG23	2.08	0.52
1:F:52:PHE:CB	1:F:132:MET:CE	2.81	0.52
1:F:58:THR:OG1	1:F:209:LEU:HD11	2.10	0.52
1:B:63:KZY:CD2	1:B:63:KZY:N2	2.72	0.52
1:A:144:GLU:HA	1:A:157:VAL:HB	1.91	0.52
1:B:146:LEU:HD11	1:B:191:VAL:HG22	1.92	0.52
1:D:44:VAL:HG23	1:D:205:SER:HA	1.92	0.52
1:B:6:PRO:O	1:B:33:PRO:HD2	2.09	0.51
1:B:146:LEU:HD11	1:B:191:VAL:CG2	2.39	0.51
1:C:183:VAL:HG12	1:C:184:GLN:N	2.24	0.51
1:D:146:LEU:HA	1:D:154:LYS:O	2.10	0.51
1:H:94:ASN:CA	1:H:100:ILE:HD13	2.40	0.51
1:A:63:KZY:CD2	1:A:63:KZY:N2	2.72	0.51
1:C:158:ASN:OD1	1:C:172:ASP:OD1	2.28	0.51
1:D:157:VAL:HG12	1:D:173:PHE:CB	2.37	0.51
1:G:14:MET:SD	1:G:61:PHE:CE2	3.03	0.51
1:B:90:GLU:HB3	1:H:123:VAL:CG1	2.41	0.51
1:G:40:MET:HE2	1:G:42:LEU:CD2	2.36	0.51
1:H:63:KZY:N2	1:H:63:KZY:CD2	2.72	0.51
1:A:26:GLU:OE2	1:A:45:LYS:NZ	2.44	0.51

Continued on next page...

Continued from previous page...

Atom-1	Atom-2	Interatomic distance (Å)	Clash overlap (Å)
1:F:60:VAL:HG13	1:F:89:TRP:HH2	1.75	0.51
1:F:107:ILE:HD12	1:F:116:TYR:CD2	2.46	0.51
1:B:158:ASN:ND2	1:B:172:ASP:OD1	2.43	0.51
1:H:85:GLU:OE1	1:H:85:GLU:N	2.43	0.51
1:F:171:CYS:SG	1:F:173:PHE:HE1	2.33	0.51
1:G:12:LEU:CB	1:G:116:TYR:HB2	2.41	0.51
1:G:144:GLU:HB3	1:G:191:VAL:HG12	1.92	0.51
1:C:59:THR:HG23	1:C:63:KZY:CG2	2.41	0.50
1:C:66:ARG:HG2	1:C:79:PHE:CE2	2.45	0.50
1:E:57:LEU:CD1	1:E:120:PHE:CE1	2.92	0.50
1:F:66:ARG:HB3	1:F:79:PHE:CE1	2.46	0.50
1:A:152:VAL:CG2	1:A:178:LYS:CG	2.75	0.50
1:B:96:GLU:OE2	1:B:170:ARG:HB2	2.11	0.50
1:F:63:KZY:N2	1:F:63:KZY:CD2	2.72	0.50
1:B:63:KZY:CB1	1:B:195:ILE:CD1	2.89	0.50
1:B:92:SER:OG	1:H:100:ILE:HG21	2.12	0.50
1:C:63:KZY:CD2	1:C:63:KZY:N2	2.72	0.50
1:E:9:LYS:HA	1:E:30:LEU:HA	1.94	0.50
1:C:14:MET:HE3	1:C:23:PHE:HE2	1.76	0.50
1:D:65:ASN:OD1	1:D:107:ILE:CD1	2.60	0.50
1:G:87:TYR:HB2	1:G:178:LYS:O	2.11	0.50
1:F:87:TYR:H	1:F:107:ILE:HG23	1.77	0.50
1:F:94:ASN:C	2:F:303:HOH:O	2.49	0.50
1:F:132:MET:HE3	1:F:132:MET:CA	2.41	0.50
1:B:159:THR:HG22	1:B:160:ALA:N	2.27	0.50
1:G:101:CYS:HA	1:G:122:GLY:HA2	1.94	0.49
1:D:125:PHE:O	2:D:301:HOH:O	2.20	0.49
1:H:26:GLU:HG3	1:H:45:LYS:HG3	1.92	0.49
1:A:14:MET:HB2	1:A:118:ILE:HB	1.95	0.49
1:D:10:ILE:HD11	1:D:68:PHE:CE2	2.47	0.49
1:E:144:GLU:HA	1:E:157:VAL:HG22	1.95	0.49
1:H:42:LEU:HD11	1:H:207:VAL:HB	1.94	0.49
1:B:63:KZY:CG2	1:B:193:HIS:CE1	2.95	0.49
1:B:91:ARG:HE	1:B:175:THR:HB	1.77	0.49
1:H:10:ILE:HD11	1:H:68:PHE:CZ	2.48	0.49
1:B:63:KZY:CB2	1:B:66:ARG:HH22	2.26	0.49
1:A:125:PHE:O	2:A:301:HOH:O	2.20	0.49
1:E:146:LEU:CD1	1:E:191:VAL:HG23	2.41	0.49
1:H:201:ASP:HB2	1:H:206:ASN:H	1.76	0.49
1:A:101:CYS:HB3	1:A:120:PHE:CZ	2.48	0.49
1:C:60:VAL:HG13	1:C:89:TRP:CH2	2.48	0.49

Continued on next page...

Continued from previous page...

Atom-1	Atom-2	Interatomic distance (Å)	Clash overlap (Å)
1:G:8:MET:O	1:G:30:LEU:HD12	2.12	0.49
1:E:56:ILE:O	1:E:57:LEU:HD12	2.13	0.49
1:F:192:ASP:O	1:F:213:ALA:HA	2.13	0.49
1:B:63:KZY:CD2	1:B:193:HIS:ND1	2.76	0.48
1:E:36:GLY:HA2	1:E:69:ALA:N	2.27	0.48
1:F:16:GLY:HA2	1:F:119:ARG:HH11	1.77	0.48
1:G:144:GLU:HA	1:G:157:VAL:CG2	2.43	0.48
1:B:154:LYS:HE2	1:B:176:THR:HG23	1.95	0.48
1:D:66:ARG:HG3	1:D:79:PHE:CE2	2.45	0.48
1:C:63:KZY:SG1	1:C:209:LEU:HD23	2.52	0.48
1:F:58:THR:HG21	2:F:302:HOH:O	2.14	0.48
1:G:81:GLN:OE1	2:G:302:HOH:O	2.20	0.48
1:A:19:ASN:OD1	1:A:125:PHE:HB2	2.13	0.48
1:A:75:ILE:HG21	1:A:189:HIS:ND1	2.28	0.48
1:C:119:ARG:HH12	1:E:119:ARG:CZ	2.26	0.48
1:H:43:LYS:HE2	1:H:45:LYS:HE2	1.94	0.48
1:C:63:KZY:CA2	1:C:66:ARG:HH22	2.27	0.48
1:H:38:GLN:O	1:H:38:GLN:HG2	2.11	0.48
1:A:91:ARG:HD2	1:A:93:MET:CE	2.43	0.48
1:B:14:MET:HB2	1:B:118:ILE:HB	1.95	0.48
1:G:89:TRP:HZ3	1:G:91:ARG:HB3	1.78	0.48
1:A:198:LYS:HG3	1:A:210:HIS:ND1	2.29	0.47
1:F:14:MET:HG3	1:F:118:ILE:HG22	1.97	0.47
1:A:85:GLU:OE1	1:A:85:GLU:N	2.43	0.47
1:F:107:ILE:CD1	1:F:116:TYR:CD2	2.98	0.47
1:C:87:TYR:H	1:C:107:ILE:HG23	1.80	0.47
1:B:102:ASN:HD21	1:H:100:ILE:CG2	2.19	0.47
1:D:12:LEU:HB2	1:D:116:TYR:HB2	1.96	0.47
1:E:66:ARG:HB3	1:E:79:PHE:CD1	2.50	0.47
1:H:159:THR:HG23	1:H:160:ALA:H	1.71	0.47
1:B:160:ALA:HA	1:B:170:ARG:HA	1.97	0.47
1:C:183:VAL:HG12	1:C:184:GLN:H	1.79	0.47
1:E:10:ILE:N	1:E:29:GLY:O	2.34	0.47
1:E:93:MET:HG2	1:E:173:PHE:CE1	2.49	0.47
1:D:200:HIS:ND1	1:D:204:TYR:CE2	2.82	0.47
1:E:12:LEU:HB2	1:E:116:TYR:HB2	1.97	0.47
1:F:209:LEU:HD12	1:F:209:LEU:HA	1.68	0.47
1:G:42:LEU:CD1	1:G:61:PHE:CD1	2.98	0.47
1:H:133:GLN:HB2	1:H:135:ARG:HD2	1.95	0.47
1:E:16:GLY:HA2	1:E:119:ARG:NH2	2.30	0.47
1:E:60:VAL:HG13	1:E:89:TRP:HH2	1.80	0.47

Continued on next page...

Continued from previous page...

Atom-1	Atom-2	Interatomic distance (Å)	Clash overlap (Å)
1:F:128:ASN:HA	1:F:133:GLN:NE2	2.30	0.47
1:B:19:ASN:OD1	1:B:125:PHE:HB2	2.15	0.47
1:B:90:GLU:OE2	1:B:178:LYS:NZ	2.44	0.47
1:A:91:ARG:HH11	1:A:93:MET:CE	2.27	0.46
1:B:52:PHE:CE1	1:B:57:LEU:CD2	2.88	0.46
1:D:126:PRO:HD2	2:D:314:HOH:O	2.16	0.46
1:H:25:ILE:HD13	1:H:54:TYR:OH	2.14	0.46
1:H:78:TYR:CE2	1:H:183:VAL:HG21	2.49	0.46
1:D:203:ASP:OD1	1:D:203:ASP:N	2.48	0.46
1:A:81:GLN:O	1:A:181:LYS:NZ	2.24	0.46
1:C:12:LEU:HB3	1:C:116:TYR:CD2	2.50	0.46
1:G:91:ARG:HA	1:G:174:LYS:O	2.14	0.46
1:H:58:THR:HG22	1:H:195:ILE:HD13	1.98	0.46
1:D:201:ASP:OD2	1:D:205:SER:N	2.49	0.46
1:G:42:LEU:HD11	1:G:61:PHE:CD1	2.51	0.46
1:G:144:GLU:HA	1:G:157:VAL:HG23	1.97	0.46
1:H:101:CYS:HA	1:H:122:GLY:HA2	1.98	0.46
1:A:50:LEU:O	1:A:134:LYS:HE3	2.16	0.46
1:C:14:MET:CE	1:C:61:PHE:CZ	2.97	0.46
1:E:9:LYS:NZ	2:E:304:HOH:O	2.48	0.46
1:C:19:ASN:ND2	1:E:90:GLU:OE1	2.48	0.46
1:D:107:ILE:O	1:D:180:LYS:NZ	2.49	0.46
1:E:65:ASN:OD1	1:E:107:ILE:CD1	2.63	0.46
1:H:137:VAL:HG22	1:H:164:GLU:OE2	2.15	0.46
1:A:192:ASP:O	1:A:213:ALA:HA	2.16	0.46
1:B:50:LEU:HD22	1:B:52:PHE:CZ	2.50	0.46
1:H:10:ILE:N	1:H:29:GLY:O	2.43	0.46
1:H:89:TRP:CD1	1:H:107:ILE:CD1	2.99	0.46
1:H:89:TRP:CD1	1:H:107:ILE:HD12	2.51	0.46
1:H:161:LEU:HD12	1:H:169:TYR:HD2	1.80	0.46
1:D:125:PHE:CD2	1:D:131:VAL:HG11	2.50	0.46
1:G:59:THR:O	1:G:91:ARG:NH1	2.48	0.46
1:G:199:SER:HB3	1:G:208:ASN:HB3	1.98	0.46
1:C:8:MET:HE3	1:C:114:TYR:CE2	2.49	0.46
1:F:201:ASP:OD2	1:F:206:ASN:CA	2.60	0.46
1:G:66:ARG:HA	1:G:66:ARG:HH11	1.81	0.46
1:D:148:VAL:HG21	1:D:185:LEU:HB3	1.98	0.45
1:F:201:ASP:OD1	1:F:205:SER:N	2.49	0.45
1:F:14:MET:HG3	1:F:118:ILE:CG2	2.46	0.45
1:G:81:GLN:O	1:G:181:LYS:HE2	2.16	0.45
1:H:52:PHE:HE1	1:H:57:LEU:HD11	1.81	0.45

Continued on next page...

Continued from previous page...

Atom-1	Atom-2	Interatomic distance (Å)	Clash overlap (Å)
1:F:87:TYR:O	1:F:107:ILE:HG22	2.16	0.45
1:D:60:VAL:HG21	1:D:120:PHE:CE1	2.52	0.45
1:B:52:PHE:HB3	1:B:132:MET:CE	2.47	0.45
1:C:14:MET:HE2	1:C:61:PHE:CE2	2.52	0.45
1:G:95:TYR:CD2	1:G:171:CYS:HB2	2.52	0.45
1:H:76:VAL:HB	1:H:186:PRO:HB3	1.99	0.45
1:H:142:SER:O	1:H:193:HIS:N	2.39	0.45
1:B:13:ARG:HB2	1:B:26:GLU:HG2	1.99	0.45
1:C:128:ASN:OD1	1:C:128:ASN:N	2.43	0.45
1:G:33:PRO:HB3	1:G:67:VAL:HG12	1.98	0.45
1:C:93:MET:HG2	1:C:173:PHE:CE1	2.52	0.44
1:G:89:TRP:CZ3	1:G:91:ARG:HB3	2.52	0.44
1:A:55:ASP:HA	1:A:58:THR:HG23	1.98	0.44
1:A:94:ASN:HB3	1:A:172:ASP:HB2	1.99	0.44
1:B:21:HIS:HA	1:B:22:PRO:HD3	1.91	0.44
1:D:59:THR:HG22	1:D:91:ARG:NH1	2.32	0.44
1:F:85:GLU:CD	1:F:181:LYS:HD3	2.37	0.44
1:A:97:ASP:OD1	1:A:169:TYR:OH	2.30	0.44
1:B:10:ILE:N	1:B:29:GLY:O	2.44	0.44
1:C:9:LYS:N	1:C:112:ASP:O	2.27	0.44
1:G:128:ASN:HA	1:G:133:GLN:HE21	1.82	0.44
1:C:15:GLU:O	1:C:119:ARG:HD2	2.17	0.44
1:H:89:TRP:HD1	1:H:107:ILE:HD12	1.83	0.44
1:A:171:CYS:HB3	1:A:173:PHE:HE1	1.82	0.44
1:D:66:ARG:HG2	1:D:79:PHE:CZ	2.52	0.44
1:D:83:PHE:CE2	1:D:114:TYR:CE1	3.03	0.44
1:A:152:VAL:HG22	1:A:177:TYR:O	2.18	0.44
1:B:211:GLU:HG2	1:B:212:HIS:N	2.33	0.44
1:D:85:GLU:OE1	1:D:181:LYS:NZ	2.36	0.44
1:G:81:GLN:O	1:G:181:LYS:CE	2.66	0.44
1:B:25:ILE:HD13	1:B:44:VAL:HA	1.99	0.44
1:C:136:THR:HG23	1:C:161:LEU:HB3	1.99	0.44
1:E:57:LEU:HD11	1:E:120:PHE:CE2	2.53	0.44
1:G:53:ALA:HB1	1:G:136:THR:HG21	1.99	0.44
1:H:57:LEU:HD23	1:H:120:PHE:CZ	2.52	0.44
1:B:159:THR:HG22	1:B:160:ALA:H	1.82	0.44
1:F:128:ASN:OD1	1:F:128:ASN:N	2.46	0.44
1:B:107:ILE:HG12	1:B:116:TYR:CD2	2.53	0.43
1:D:200:HIS:ND1	1:D:204:TYR:CZ	2.85	0.43
1:F:59:THR:HG23	1:F:63:KZY:CG2	2.48	0.43
1:B:158:ASN:OD1	1:B:172:ASP:HA	2.18	0.43

Continued on next page...

Continued from previous page...

Atom-1	Atom-2	Interatomic distance (Å)	Clash overlap (Å)
1:H:146:LEU:HA	1:H:154:LYS:O	2.18	0.43
1:A:42:LEU:HD13	1:A:61:PHE:CE1	2.54	0.43
1:B:71:TYR:HA	1:B:72:PRO:HD3	1.86	0.43
1:C:119:ARG:NH1	1:E:119:ARG:CZ	2.82	0.43
1:F:36:GLY:HA2	1:F:69:ALA:N	2.33	0.43
1:F:86:GLY:O	1:F:180:LYS:HG3	2.18	0.43
1:H:91:ARG:HH11	1:H:93:MET:HE3	1.82	0.43
1:F:51:PRO:HA	1:F:134:LYS:HZ1	1.83	0.43
1:C:209:LEU:HA	1:C:209:LEU:HD12	1.75	0.43
1:E:97:ASP:OD1	1:E:169:TYR:OH	2.27	0.43
1:A:25:ILE:HD11	1:A:61:PHE:CE1	2.53	0.43
1:B:63:KZY:CE1	1:B:193:HIS:ND1	2.82	0.43
1:B:85:GLU:OE1	1:B:85:GLU:N	2.43	0.43
1:E:10:ILE:CD1	1:E:116:TYR:OH	2.65	0.43
1:F:14:MET:CE	1:F:61:PHE:HZ	2.30	0.43
1:F:87:TYR:CE1	1:F:107:ILE:HG21	2.54	0.43
1:H:10:ILE:HD11	1:H:68:PHE:HZ	1.83	0.43
1:A:146:LEU:HB2	1:A:189:HIS:CD2	2.54	0.43
1:F:93:MET:HG2	1:F:173:PHE:CE1	2.54	0.43
1:H:192:ASP:O	1:H:213:ALA:HA	2.18	0.43
1:A:10:ILE:HD11	1:A:68:PHE:CE1	2.53	0.43
1:D:16:GLY:HA2	1:D:119:ARG:NH1	2.33	0.43
1:D:183:VAL:HG12	1:D:184:GLN:N	2.34	0.43
1:F:197:ILE:HG13	2:F:302:HOH:O	2.19	0.43
1:G:58:THR:HB	1:G:209:LEU:HD11	2.01	0.43
1:G:63:KZY:SG1	1:G:209:LEU:HD23	2.58	0.43
1:H:89:TRP:HE1	1:H:105:ASN:CG	2.20	0.43
1:A:25:ILE:CG2	1:A:44:VAL:HA	2.49	0.43
1:E:85:GLU:OE1	1:E:85:GLU:N	2.49	0.43
1:A:93:MET:O	1:A:100:ILE:HG23	2.18	0.42
1:A:146:LEU:HD23	1:A:155:GLY:HA2	2.01	0.42
1:G:43:LYS:HE2	1:G:45:LYS:NZ	2.34	0.42
1:G:90:GLU:OE2	1:G:178:LYS:NZ	2.36	0.42
1:C:14:MET:HE1	1:C:57:LEU:HD22	2.02	0.42
1:F:5:LYS:NZ	1:F:112:ASP:HB3	2.34	0.42
1:H:145:LYS:HD2	1:H:156:ASP:O	2.19	0.42
1:A:96:GLU:OE2	1:A:170:ARG:HG3	2.19	0.42
1:D:87:TYR:CE1	1:D:107:ILE:HD12	2.54	0.42
1:F:85:GLU:OE1	1:F:85:GLU:N	2.50	0.42
1:H:33:PRO:HB3	1:H:67:VAL:HG12	2.01	0.42
1:H:74:ASN:OD1	1:H:75:ILE:HG13	2.18	0.42

Continued on next page...

Continued from previous page...

Atom-1	Atom-2	Interatomic distance (Å)	Clash overlap (Å)
1:A:151:GLY:HA3	1:E:73:GLU:O	2.19	0.42
1:C:50:LEU:HA	1:C:51:PRO:HD3	1.78	0.42
1:C:59:THR:HG23	1:C:63:KZY:CD1	2.49	0.42
1:C:70:LYS:CB	1:C:214:GLU:HG2	2.49	0.42
1:C:85:GLU:OE1	1:C:85:GLU:N	2.50	0.42
1:F:16:GLY:HA2	1:F:119:ARG:NH1	2.34	0.42
1:G:144:GLU:HB3	1:G:191:VAL:CG1	2.49	0.42
1:C:144:GLU:O	1:C:190:PHE:HA	2.20	0.42
1:E:89:TRP:CE2	1:E:105:ASN:HB3	2.55	0.42
1:G:54:TYR:CE2	1:G:207:VAL:HG21	2.54	0.42
1:D:3:VAL:HG13	1:D:4:ILE:N	2.28	0.42
1:D:15:GLU:O	1:D:119:ARG:HD2	2.19	0.42
1:D:53:ALA:HB3	1:D:131:VAL:HG23	2.02	0.42
1:D:154:LYS:HE2	1:D:176:THR:OG1	2.20	0.42
1:G:187:ASP:OD2	1:G:187:ASP:N	2.53	0.42
1:E:19:ASN:OD1	1:E:132:MET:HE3	2.19	0.42
1:H:11:LYS:HB3	1:H:11:LYS:HE3	1.80	0.42
1:D:66:ARG:HH11	1:D:66:ARG:HA	1.84	0.42
1:D:81:GLN:HB3	1:D:183:VAL:CG1	2.50	0.42
1:H:42:LEU:CD1	1:H:207:VAL:HB	2.49	0.42
1:B:89:TRP:CE2	1:B:105:ASN:HB3	2.55	0.42
1:B:152:VAL:HG22	1:B:177:TYR:O	2.20	0.42
1:D:87:TYR:HB2	1:D:178:LYS:O	2.20	0.42
1:F:6:PRO:O	1:F:32:LYS:HA	2.20	0.42
1:G:81:GLN:HB3	1:G:183:VAL:CG2	2.50	0.42
1:H:42:LEU:HD13	1:H:54:TYR:OH	2.20	0.42
1:H:94:ASN:CA	1:H:100:ILE:CD1	2.97	0.42
1:A:211:GLU:HG2	1:A:212:HIS:N	2.33	0.42
1:B:76:VAL:HB	1:B:186:PRO:HB3	2.02	0.42
1:D:192:ASP:O	1:D:213:ALA:HA	2.19	0.42
1:A:76:VAL:CG2	1:A:186:PRO:HB3	2.33	0.41
1:A:143:THR:O	1:A:157:VAL:HG23	2.19	0.41
1:B:87:TYR:HB2	1:B:179:ALA:HA	2.02	0.41
1:G:3:VAL:HG13	1:G:84:PRO:HG3	2.02	0.41
1:A:25:ILE:HD13	1:A:25:ILE:HG21	1.80	0.41
1:A:10:ILE:N	1:A:29:GLY:O	2.37	0.41
1:A:67:VAL:HG11	1:A:83:PHE:CE1	2.54	0.41
1:A:101:CYS:HA	1:A:122:GLY:HA2	2.01	0.41
1:B:87:TYR:CB	1:B:179:ALA:HA	2.50	0.41
1:B:192:ASP:OD2	1:B:216:HIS:NE2	2.53	0.41
1:E:66:ARG:NH1	1:E:193:HIS:CE1	2.89	0.41

Continued on next page...

Continued from previous page...

Atom-1	Atom-2	Interatomic distance (Å)	Clash overlap (Å)
1:B:146:LEU:HD21	1:B:177:TYR:CE1	2.54	0.41
1:A:195:ILE:HG13	1:A:211:GLU:HB2	2.03	0.41
1:B:16:GLY:O	1:B:22:PRO:HA	2.21	0.41
1:A:135:ARG:HG3	1:A:135:ARG:HH11	1.85	0.41
1:B:159:THR:CG2	1:B:160:ALA:H	2.34	0.41
1:C:63:KZY:CB2	1:C:66:ARG:NH2	2.83	0.41
1:E:66:ARG:NH1	1:E:193:HIS:HE1	2.19	0.41
1:E:67:VAL:CG1	1:E:83:PHE:HE1	2.27	0.41
1:E:104:THR:OG1	1:E:119:ARG:HB3	2.21	0.41
1:E:142:SER:OG	1:E:157:VAL:HG11	2.21	0.41
1:H:15:GLU:O	1:H:119:ARG:HD2	2.20	0.41
1:H:191:VAL:HA	1:H:215:ALA:HA	2.02	0.41
1:G:63:KZY:O2	1:G:91:ARG:NH2	2.46	0.41
1:A:82:SER:O	1:A:86:GLY:N	2.53	0.41
1:B:18:VAL:O	1:B:19:ASN:HB2	2.21	0.41
1:B:60:VAL:HG13	1:B:89:TRP:CH2	2.53	0.41
1:C:8:MET:HE3	1:C:114:TYR:CZ	2.56	0.41
1:C:56:ILE:HG13	1:C:57:LEU:N	2.36	0.41
1:C:136:THR:HG23	1:C:161:LEU:HD22	1.97	0.41
1:D:38:GLN:NE2	1:D:211:GLU:OE2	2.54	0.41
1:D:185:LEU:HA	1:D:186:PRO:HD3	1.96	0.41
1:E:65:ASN:OD1	1:E:107:ILE:HD12	2.21	0.41
1:F:58:THR:HG23	1:F:195:ILE:HD13	2.02	0.41
1:G:146:LEU:HD11	1:G:191:VAL:HG12	2.02	0.41
1:G:147:TYR:OH	1:G:156:ASP:OD2	2.35	0.41
1:G:195:ILE:HD11	1:G:209:LEU:HD21	2.03	0.41
1:B:19:ASN:N	1:B:122:GLY:O	2.43	0.41
1:D:56:ILE:HG21	1:D:131:VAL:HG21	2.03	0.41
1:G:89:TRP:CE2	1:G:105:ASN:HB3	2.56	0.41
1:C:70:LYS:HD2	1:C:214:GLU:HG2	2.03	0.40
1:D:66:ARG:HA	1:D:66:ARG:NH1	2.37	0.40
1:B:57:LEU:H	1:B:57:LEU:HG	1.68	0.40
1:C:94:ASN:HB3	1:C:172:ASP:HB2	2.02	0.40
1:C:137:VAL:HG23	1:C:162:SER:O	2.22	0.40
1:E:63:KZY:O2	1:E:91:ARG:NH2	2.37	0.40
1:G:40:MET:HE2	1:G:42:LEU:CG	2.51	0.40
1:G:142:SER:HG	1:G:159:THR:HG1	1.57	0.40
1:A:77:ASP:O	1:A:81:GLN:HB2	2.22	0.40
1:C:66:ARG:HH11	1:C:66:ARG:HD3	1.71	0.40
1:G:146:LEU:CB	1:G:189:HIS:CE1	3.04	0.40
1:H:6:PRO:O	1:H:32:LYS:HA	2.22	0.40

Continued on next page...

Continued from previous page...

Atom-1	Atom-2	Interatomic distance (Å)	Clash overlap (Å)
1:B:26:GLU:HB2	1:B:45:LYS:HE2	2.04	0.40
1:D:49:PRO:HB3	1:D:203:ASP:HB2	2.03	0.40
1:D:12:LEU:CB	1:D:116:TYR:HB2	2.52	0.40
1:D:25:ILE:HD13	1:D:44:VAL:HA	2.03	0.40
1:D:201:ASP:OD2	1:D:201:ASP:N	2.54	0.40
1:H:14:MET:SD	1:H:61:PHE:CE2	3.15	0.40
1:H:89:TRP:NE1	1:H:105:ASN:CG	2.75	0.40

All (7) symmetry-related close contacts are listed below. The label for Atom-2 includes the symmetry operator and encoded unit-cell translations to be applied.

Atom-1	Atom-2	Interatomic distance (Å)	Clash overlap (Å)
1:D:119:ARG:NE	1:F:119:ARG:NH2[1_655]	1.75	0.45
1:D:119:ARG:NH2	1:F:119:ARG:NH2[1_655]	1.79	0.41
1:D:119:ARG:CZ	1:F:119:ARG:NH2[1_655]	1.82	0.38
1:D:119:ARG:NH2	1:F:119:ARG:NE[1_655]	2.05	0.15
1:D:90:GLU:OE2	1:F:19:ASN:ND2[1_655]	2.15	0.05
1:A:176:THR:OG1	1:G:124:ASN:OD1[1_455]	2.16	0.04
1:A:143:THR:CG2	1:E:143:THR:OG1[2_656]	2.17	0.03

5.3 Torsion angles (i)

5.3.1 Protein backbone (i)

In the following table, the Percentiles column shows the percent Ramachandran outliers of the chain as a percentile score with respect to all X-ray entries followed by that with respect to entries of similar resolution.

The Analysed column shows the number of residues for which the backbone conformation was analysed, and the total number of residues.

Mol	Chain	Analysed	Favoured	Allowed	Outliers	Percentiles	
1	A	213/255 (84%)	205 (96%)	8 (4%)	0	100	100
1	B	210/255 (82%)	205 (98%)	5 (2%)	0	100	100
1	C	211/255 (83%)	205 (97%)	6 (3%)	0	100	100
1	D	208/255 (82%)	202 (97%)	6 (3%)	0	100	100
1	E	213/255 (84%)	204 (96%)	9 (4%)	0	100	100
1	F	213/255 (84%)	206 (97%)	6 (3%)	1 (0%)	29	54

Continued on next page...

Continued from previous page...

Mol	Chain	Analysed	Favoured	Allowed	Outliers	Percentiles	
1	G	212/255 (83%)	206 (97%)	6 (3%)	0	100	100
1	H	213/255 (84%)	208 (98%)	5 (2%)	0	100	100
All	All	1693/2040 (83%)	1641 (97%)	51 (3%)	1 (0%)	51	78

All (1) Ramachandran outliers are listed below:

Mol	Chain	Res	Type
1	F	204	TYR

5.3.2 Protein sidechains (i)

In the following table, the Percentiles column shows the percent sidechain outliers of the chain as a percentile score with respect to all X-ray entries followed by that with respect to entries of similar resolution.

The Analysed column shows the number of residues for which the sidechain conformation was analysed, and the total number of residues.

Mol	Chain	Analysed	Rotameric	Outliers	Percentiles	
1	A	179/217 (82%)	171 (96%)	8 (4%)	27	55
1	B	178/217 (82%)	177 (99%)	1 (1%)	86	95
1	C	178/217 (82%)	177 (99%)	1 (1%)	86	95
1	D	178/217 (82%)	175 (98%)	3 (2%)	60	84
1	E	181/217 (83%)	176 (97%)	5 (3%)	43	73
1	F	183/217 (84%)	175 (96%)	8 (4%)	28	56
1	G	181/217 (83%)	176 (97%)	5 (3%)	43	73
1	H	181/217 (83%)	173 (96%)	8 (4%)	28	56
All	All	1439/1736 (83%)	1400 (97%)	39 (3%)	44	74

All (39) residues with a non-rotameric sidechain are listed below:

Mol	Chain	Res	Type
1	A	38	GLN
1	A	57	LEU
1	A	66	ARG
1	A	121	ASP
1	A	128	ASN
1	A	133	GLN

Continued on next page...

Continued from previous page...

Mol	Chain	Res	Type
1	A	158	ASN
1	A	189	HIS
1	B	57	LEU
1	C	197	ILE
1	D	57	LEU
1	D	118	ILE
1	D	198	LYS
1	E	10	ILE
1	E	12	LEU
1	E	13	ARG
1	E	38	GLN
1	E	149	ARG
1	F	12	LEU
1	F	14	MET
1	F	39	SER
1	F	58	THR
1	F	74	ASN
1	F	201	ASP
1	F	202	LYS
1	F	219	LEU
1	G	7	ASP
1	G	66	ARG
1	G	134	LYS
1	G	142	SER
1	G	219	LEU
1	H	30	LEU
1	H	66	ARG
1	H	90	GLU
1	H	92	SER
1	H	145	LYS
1	H	146	LEU
1	H	198	LYS
1	H	201	ASP

Sometimes sidechains can be flipped to improve hydrogen bonding and reduce clashes. There are no such sidechains identified.

5.3.3 RNA (i)

There are no RNA molecules in this entry.

5.4 Non-standard residues in protein, DNA, RNA chains (i)

8 non-standard protein/DNA/RNA residues are modelled in this entry.

In the following table, the Counts columns list the number of bonds (or angles) for which Mogul statistics could be retrieved, the number of bonds (or angles) that are observed in the model and the number of bonds (or angles) that are defined in the Chemical Component Dictionary. The Link column lists molecule types, if any, to which the group is linked. The Z score for a bond length (or angle) is the number of standard deviations the observed value is removed from the expected value. A bond length (or angle) with $|Z| > 2$ is considered an outlier worth inspection. RMSZ is the root-mean-square of all Z scores of the bond lengths (or angles).

Mol	Type	Chain	Res	Link	Bond lengths			Bond angles		
					Counts	RMSZ	$\#\|Z\| > 2$	Counts	RMSZ	$\#\|Z\| > 2$
1	KZY	C	63	1	23,23,24	3.99	18 (78%)	28,32,34	4.35	15 (53%)
1	KZY	G	63	1	23,23,24	4.00	18 (78%)	28,32,34	4.36	15 (53%)
1	KZY	B	63	1	23,23,24	3.99	18 (78%)	28,32,34	4.36	15 (53%)
1	KZY	F	63	1	23,23,24	3.99	18 (78%)	28,32,34	4.35	15 (53%)
1	KZY	D	63	1	23,23,24	4.00	18 (78%)	28,32,34	4.36	15 (53%)
1	KZY	E	63	1	23,23,24	3.99	18 (78%)	28,32,34	4.37	15 (53%)
1	KZY	H	63	1	23,23,24	3.99	18 (78%)	28,32,34	4.34	15 (53%)
1	KZY	A	63	1	23,23,24	3.99	18 (78%)	28,32,34	4.37	15 (53%)

In the following table, the Chirals column lists the number of chiral outliers, the number of chiral centers analysed, the number of these observed in the model and the number defined in the Chemical Component Dictionary. Similar counts are reported in the Torsion and Rings columns. '-' means no outliers of that kind were identified.

Mol	Type	Chain	Res	Link	Chirals	Torsions	Rings
1	KZY	C	63	1	-	1/9/29/30	0/2/2/2
1	KZY	G	63	1	-	1/9/29/30	0/2/2/2
1	KZY	B	63	1	-	1/9/29/30	0/2/2/2
1	KZY	F	63	1	-	1/9/29/30	0/2/2/2
1	KZY	D	63	1	-	1/9/29/30	0/2/2/2
1	KZY	E	63	1	-	1/9/29/30	0/2/2/2
1	KZY	H	63	1	-	1/9/29/30	0/2/2/2
1	KZY	A	63	1	-	1/9/29/30	0/2/2/2

All (144) bond length outliers are listed below:

Mol	Chain	Res	Type	Atoms	Z	Observed(Å)	Ideal(Å)
1	H	63	KZY	CA2-C2	-9.01	1.39	1.48
1	D	63	KZY	CA2-C2	-9.00	1.39	1.48

Continued on next page...

Continued from previous page...

Mol	Chain	Res	Type	Atoms	Z	Observed(Å)	Ideal(Å)
1	E	63	KZY	CA2-C2	-8.99	1.39	1.48
1	G	63	KZY	CA2-C2	-8.98	1.39	1.48
1	F	63	KZY	CA2-C2	-8.98	1.39	1.48
1	A	63	KZY	CA2-C2	-8.96	1.39	1.48
1	C	63	KZY	CA2-C2	-8.93	1.39	1.48
1	B	63	KZY	CA2-C2	-8.92	1.39	1.48
1	A	63	KZY	CZ-CE1	-6.70	1.31	1.40
1	D	63	KZY	CZ-CE1	-6.67	1.31	1.40
1	B	63	KZY	CZ-CE1	-6.65	1.31	1.40
1	G	63	KZY	CZ-CE1	-6.65	1.31	1.40
1	F	63	KZY	CZ-CE1	-6.64	1.31	1.40
1	C	63	KZY	CZ-CE1	-6.63	1.31	1.40
1	H	63	KZY	CZ-CE1	-6.62	1.31	1.40
1	E	63	KZY	CZ-CE1	-6.56	1.31	1.40
1	C	63	KZY	CA3-C3	5.72	1.68	1.49
1	B	63	KZY	CA3-C3	5.72	1.68	1.49
1	G	63	KZY	CA3-C3	5.72	1.68	1.49
1	E	63	KZY	CA3-C3	5.71	1.68	1.49
1	F	63	KZY	CA3-C3	5.71	1.68	1.49
1	D	63	KZY	CA3-C3	5.70	1.68	1.49
1	A	63	KZY	CA3-C3	5.69	1.68	1.49
1	H	63	KZY	CA3-C3	5.69	1.68	1.49
1	G	63	KZY	CD1-CE1	-5.24	1.31	1.39
1	D	63	KZY	CD1-CE1	-5.23	1.31	1.39
1	E	63	KZY	CD1-CE1	-5.22	1.31	1.39
1	B	63	KZY	CD1-CE1	-5.20	1.32	1.39
1	A	63	KZY	CD1-CE1	-5.19	1.32	1.39
1	F	63	KZY	CD1-CE1	-5.18	1.32	1.39
1	C	63	KZY	CD1-CE1	-5.18	1.32	1.39
1	H	63	KZY	CD1-CE1	-5.13	1.32	1.39
1	C	63	KZY	C2-N3	-5.07	1.27	1.39
1	G	63	KZY	C2-N3	-5.06	1.27	1.39
1	D	63	KZY	C2-N3	-5.06	1.27	1.39
1	H	63	KZY	C2-N3	-5.06	1.28	1.39
1	F	63	KZY	C2-N3	-5.05	1.28	1.39
1	A	63	KZY	C2-N3	-5.05	1.28	1.39
1	E	63	KZY	C2-N3	-5.04	1.28	1.39
1	B	63	KZY	C2-N3	-5.03	1.28	1.39
1	H	63	KZY	CB1-CA1	-4.96	1.47	1.53
1	E	63	KZY	CB1-CA1	-4.92	1.47	1.53
1	F	63	KZY	CB1-CA1	-4.90	1.47	1.53
1	D	63	KZY	CB1-CA1	-4.90	1.47	1.53

Continued on next page...

Continued from previous page...

Mol	Chain	Res	Type	Atoms	Z	Observed(Å)	Ideal(Å)
1	C	63	KZY	CB1-CA1	-4.90	1.47	1.53
1	G	63	KZY	CB1-CA1	-4.88	1.47	1.53
1	A	63	KZY	CB1-CA1	-4.85	1.47	1.53
1	B	63	KZY	CB1-CA1	-4.85	1.47	1.53
1	D	63	KZY	C1-N2	-4.63	1.25	1.32
1	E	63	KZY	C1-N2	-4.63	1.25	1.32
1	A	63	KZY	C1-N2	-4.62	1.25	1.32
1	B	63	KZY	C1-N2	-4.60	1.25	1.32
1	F	63	KZY	C1-N2	-4.60	1.25	1.32
1	G	63	KZY	C1-N2	-4.59	1.25	1.32
1	C	63	KZY	C1-N2	-4.58	1.25	1.32
1	H	63	KZY	C1-N2	-4.57	1.25	1.32
1	G	63	KZY	OH-CZ	-3.84	1.28	1.36
1	E	63	KZY	OH-CZ	-3.83	1.28	1.36
1	B	63	KZY	OH-CZ	-3.82	1.28	1.36
1	G	63	KZY	CG2-CB2	-3.82	1.39	1.46
1	F	63	KZY	OH-CZ	-3.81	1.28	1.36
1	D	63	KZY	CG2-CB2	-3.81	1.39	1.46
1	H	63	KZY	CG2-CB2	-3.81	1.39	1.46
1	C	63	KZY	CG2-CB2	-3.80	1.39	1.46
1	C	63	KZY	OH-CZ	-3.80	1.28	1.36
1	F	63	KZY	CG2-CB2	-3.80	1.39	1.46
1	H	63	KZY	OH-CZ	-3.80	1.28	1.36
1	B	63	KZY	CG2-CB2	-3.80	1.39	1.46
1	A	63	KZY	CG2-CB2	-3.79	1.39	1.46
1	A	63	KZY	OH-CZ	-3.79	1.28	1.36
1	D	63	KZY	CA1-N1	3.78	1.68	1.48
1	E	63	KZY	CG2-CB2	-3.77	1.39	1.46
1	H	63	KZY	CA1-N1	3.77	1.68	1.48
1	G	63	KZY	CA1-N1	3.77	1.68	1.48
1	C	63	KZY	CA1-N1	3.77	1.68	1.48
1	E	63	KZY	CA1-N1	3.76	1.68	1.48
1	F	63	KZY	CA1-N1	3.76	1.68	1.48
1	D	63	KZY	OH-CZ	-3.76	1.28	1.36
1	B	63	KZY	CA1-N1	3.76	1.68	1.48
1	A	63	KZY	CA1-N1	3.76	1.68	1.48
1	C	63	KZY	CE2-CZ	-3.41	1.33	1.39
1	B	63	KZY	CE2-CZ	-3.38	1.33	1.39
1	E	63	KZY	CE2-CZ	-3.37	1.33	1.39
1	F	63	KZY	CE2-CZ	-3.37	1.33	1.39
1	H	63	KZY	CE2-CZ	-3.37	1.33	1.39
1	A	63	KZY	CE2-CZ	-3.36	1.33	1.39

Continued on next page...

Continued from previous page...

Mol	Chain	Res	Type	Atoms	Z	Observed(Å)	Ideal(Å)
1	G	63	KZY	CE2-CZ	-3.35	1.33	1.39
1	D	63	KZY	CE2-CZ	-3.35	1.33	1.39
1	H	63	KZY	O2-C2	-3.05	1.16	1.23
1	B	63	KZY	O2-C2	-3.04	1.16	1.23
1	C	63	KZY	O2-C2	-3.03	1.16	1.23
1	F	63	KZY	O2-C2	-3.03	1.16	1.23
1	A	63	KZY	O2-C2	-3.03	1.16	1.23
1	D	63	KZY	O2-C2	-3.00	1.16	1.23
1	G	63	KZY	O2-C2	-3.00	1.16	1.23
1	E	63	KZY	O2-C2	-2.99	1.16	1.23
1	A	63	KZY	CA2-N2	-2.92	1.32	1.38
1	E	63	KZY	CA2-N2	-2.91	1.32	1.38
1	C	63	KZY	CA2-N2	-2.90	1.32	1.38
1	C	63	KZY	CD1-CG2	-2.90	1.35	1.39
1	F	63	KZY	CA2-N2	-2.89	1.32	1.38
1	H	63	KZY	CD1-CG2	-2.89	1.35	1.39
1	D	63	KZY	CA2-N2	-2.89	1.32	1.38
1	F	63	KZY	CD1-CG2	-2.88	1.35	1.39
1	G	63	KZY	CD1-CG2	-2.88	1.35	1.39
1	B	63	KZY	CA2-N2	-2.88	1.32	1.38
1	E	63	KZY	CD1-CG2	-2.87	1.35	1.39
1	H	63	KZY	CA2-N2	-2.87	1.32	1.38
1	A	63	KZY	CD1-CG2	-2.86	1.35	1.39
1	G	63	KZY	CA2-N2	-2.86	1.32	1.38
1	D	63	KZY	CD1-CG2	-2.84	1.35	1.39
1	B	63	KZY	CD1-CG2	-2.83	1.35	1.39
1	G	63	KZY	CB2-CA2	-2.51	1.33	1.35
1	E	63	KZY	CB2-CA2	-2.43	1.33	1.35
1	F	63	KZY	CB2-CA2	-2.43	1.33	1.35
1	B	63	KZY	CB1-SG1	-2.43	1.76	1.81
1	C	63	KZY	CB2-CA2	-2.42	1.33	1.35
1	D	63	KZY	CB1-SG1	-2.42	1.76	1.81
1	C	63	KZY	CB1-SG1	-2.41	1.76	1.81
1	B	63	KZY	CB2-CA2	-2.41	1.33	1.35
1	G	63	KZY	CB1-SG1	-2.41	1.76	1.81
1	H	63	KZY	CB1-SG1	-2.40	1.76	1.81
1	F	63	KZY	CB1-SG1	-2.40	1.76	1.81
1	E	63	KZY	CB1-SG1	-2.40	1.76	1.81
1	A	63	KZY	CB1-SG1	-2.39	1.76	1.81
1	H	63	KZY	CB2-CA2	-2.39	1.33	1.35
1	D	63	KZY	CB2-CA2	-2.37	1.33	1.35
1	A	63	KZY	CB2-CA2	-2.36	1.33	1.35

Continued on next page...

Continued from previous page...

Mol	Chain	Res	Type	Atoms	Z	Observed(Å)	Ideal(Å)
1	D	63	KZY	CD2-CG2	-2.20	1.35	1.39
1	C	63	KZY	CD2-CG2	-2.19	1.35	1.39
1	A	63	KZY	CD2-CG2	-2.18	1.35	1.39
1	E	63	KZY	CD2-CG2	-2.17	1.35	1.39
1	G	63	KZY	CA1-C1	-2.17	1.46	1.51
1	F	63	KZY	CD2-CG2	-2.16	1.35	1.39
1	B	63	KZY	CD2-CG2	-2.16	1.35	1.39
1	H	63	KZY	CD2-CG2	-2.15	1.35	1.39
1	G	63	KZY	CD2-CG2	-2.15	1.35	1.39
1	C	63	KZY	CA1-C1	-2.13	1.46	1.51
1	H	63	KZY	CA1-C1	-2.13	1.46	1.51
1	F	63	KZY	CA1-C1	-2.12	1.46	1.51
1	E	63	KZY	CA1-C1	-2.12	1.46	1.51
1	A	63	KZY	CA1-C1	-2.12	1.46	1.51
1	B	63	KZY	CA1-C1	-2.12	1.46	1.51
1	D	63	KZY	CA1-C1	-2.11	1.46	1.51

All (120) bond angle outliers are listed below:

Mol	Chain	Res	Type	Atoms	Z	Observed(^{o})	Ideal(^{o})
1	A	63	KZY	O2-C2-CA2	-11.13	124.71	130.96
1	C	63	KZY	O2-C2-CA2	-11.09	124.73	130.96
1	G	63	KZY	O2-C2-CA2	-11.07	124.75	130.96
1	D	63	KZY	O2-C2-CA2	-11.05	124.75	130.96
1	E	63	KZY	O2-C2-CA2	-11.05	124.76	130.96
1	F	63	KZY	O2-C2-CA2	-11.05	124.76	130.96
1	H	63	KZY	O2-C2-CA2	-11.02	124.77	130.96
1	B	63	KZY	O2-C2-CA2	-11.00	124.78	130.96
1	B	63	KZY	O3-C3-CA3	-9.83	96.71	126.39
1	E	63	KZY	O3-C3-CA3	-9.83	96.71	126.39
1	C	63	KZY	O3-C3-CA3	-9.83	96.72	126.39
1	G	63	KZY	O3-C3-CA3	-9.82	96.73	126.39
1	D	63	KZY	O3-C3-CA3	-9.82	96.74	126.39
1	F	63	KZY	O3-C3-CA3	-9.82	96.75	126.39
1	A	63	KZY	O3-C3-CA3	-9.82	96.75	126.39
1	H	63	KZY	O3-C3-CA3	-9.80	96.79	126.39
1	B	63	KZY	CA3-N3-C1	8.66	137.56	127.16
1	A	63	KZY	CA3-N3-C1	8.66	137.56	127.16
1	E	63	KZY	CA3-N3-C1	8.66	137.56	127.16
1	D	63	KZY	CA3-N3-C1	8.64	137.53	127.16
1	H	63	KZY	CA3-N3-C1	8.63	137.52	127.16
1	F	63	KZY	CA3-N3-C1	8.62	137.51	127.16

Continued on next page...

Continued from previous page...

Mol	Chain	Res	Type	Atoms	Z	Observed(^{o})	Ideal(^{o})
1	G	63	KZY	CA3-N3-C1	8.61	137.49	127.16
1	B	63	KZY	CG2-CB2-CA2	-8.58	119.42	129.94
1	C	63	KZY	CA3-N3-C1	8.58	137.46	127.16
1	E	63	KZY	CG2-CB2-CA2	-8.56	119.45	129.94
1	D	63	KZY	CG2-CB2-CA2	-8.55	119.46	129.94
1	A	63	KZY	CG2-CB2-CA2	-8.54	119.47	129.94
1	F	63	KZY	CG2-CB2-CA2	-8.52	119.50	129.94
1	C	63	KZY	CG2-CB2-CA2	-8.51	119.51	129.94
1	G	63	KZY	CG2-CB2-CA2	-8.49	119.54	129.94
1	H	63	KZY	CG2-CB2-CA2	-8.49	119.54	129.94
1	G	63	KZY	CA2-C2-N3	7.19	106.77	103.37
1	E	63	KZY	CA2-C2-N3	7.14	106.75	103.37
1	D	63	KZY	CA2-C2-N3	7.11	106.73	103.37
1	H	63	KZY	CA2-C2-N3	7.10	106.73	103.37
1	A	63	KZY	CA2-C2-N3	7.07	106.72	103.37
1	F	63	KZY	CA2-C2-N3	7.07	106.71	103.37
1	B	63	KZY	CA2-C2-N3	7.04	106.70	103.37
1	C	63	KZY	CA2-C2-N3	7.02	106.69	103.37
1	G	63	KZY	CA1-C1-N3	4.08	130.17	124.85
1	C	63	KZY	CA1-C1-N3	4.08	130.17	124.85
1	F	63	KZY	CA1-C1-N3	4.05	130.14	124.85
1	D	63	KZY	CA1-C1-N3	4.05	130.13	124.85
1	H	63	KZY	CA1-C1-N3	4.05	130.13	124.85
1	B	63	KZY	CA1-C1-N3	4.03	130.10	124.85
1	B	63	KZY	CA3-N3-C2	-4.02	114.58	123.80
1	E	63	KZY	CA1-C1-N3	4.02	130.09	124.85
1	A	63	KZY	CA3-N3-C2	-4.01	114.61	123.80
1	C	63	KZY	CA3-N3-C2	-4.00	114.61	123.80
1	E	63	KZY	CA3-N3-C2	-4.00	114.62	123.80
1	F	63	KZY	CA3-N3-C2	-4.00	114.62	123.80
1	H	63	KZY	CA3-N3-C2	-3.99	114.64	123.80
1	A	63	KZY	CA1-C1-N3	3.99	130.06	124.85
1	D	63	KZY	CA3-N3-C2	-3.99	114.64	123.80
1	G	63	KZY	CA3-N3-C2	-3.98	114.66	123.80
1	E	63	KZY	CA2-N2-C1	3.77	108.55	105.77
1	C	63	KZY	CA2-N2-C1	3.75	108.54	105.77
1	A	63	KZY	CA2-N2-C1	3.73	108.52	105.77
1	G	63	KZY	CA2-N2-C1	3.73	108.52	105.77
1	B	63	KZY	CA2-N2-C1	3.70	108.50	105.77
1	F	63	KZY	CA2-N2-C1	3.69	108.50	105.77
1	D	63	KZY	CA2-N2-C1	3.66	108.47	105.77
1	H	63	KZY	CA2-N2-C1	3.62	108.44	105.77

Continued on next page...

Continued from previous page...

Mol	Chain	Res	Type	Atoms	Z	Observed(^{o})	Ideal(^{o})
1	C	63	KZY	CA1-CB1-SG1	-3.62	106.63	114.44
1	A	63	KZY	CA1-CB1-SG1	-3.61	106.66	114.44
1	G	63	KZY	CA1-CB1-SG1	-3.61	106.67	114.44
1	F	63	KZY	CA1-CB1-SG1	-3.60	106.68	114.44
1	D	63	KZY	CA1-CB1-SG1	-3.59	106.70	114.44
1	H	63	KZY	CA1-CB1-SG1	-3.59	106.70	114.44
1	B	63	KZY	CA1-CB1-SG1	-3.59	106.70	114.44
1	E	63	KZY	CA1-CB1-SG1	-3.59	106.71	114.44
1	G	63	KZY	C2-CA2-N2	-3.57	106.43	108.93
1	E	63	KZY	C2-CA2-N2	-3.56	106.44	108.93
1	B	63	KZY	C2-CA2-N2	-3.54	106.45	108.93
1	A	63	KZY	C2-CA2-N2	-3.53	106.46	108.93
1	C	63	KZY	C2-CA2-N2	-3.53	106.46	108.93
1	D	63	KZY	C2-CA2-N2	-3.51	106.47	108.93
1	F	63	KZY	C2-CA2-N2	-3.51	106.47	108.93
1	H	63	KZY	C2-CA2-N2	-3.46	106.51	108.93
1	E	63	KZY	CB2-CA2-N2	2.96	132.94	128.83
1	B	63	KZY	CB2-CA2-N2	2.95	132.92	128.83
1	C	63	KZY	CB2-CA2-N2	2.93	132.89	128.83
1	D	63	KZY	CB2-CA2-N2	2.93	132.89	128.83
1	A	63	KZY	CB2-CA2-N2	2.92	132.88	128.83
1	G	63	KZY	CB2-CA2-N2	2.92	132.88	128.83
1	F	63	KZY	CB2-CA2-N2	2.92	132.87	128.83
1	H	63	KZY	CB2-CA2-N2	2.87	132.81	128.83
1	B	63	KZY	CD1-CE1-CZ	2.85	119.84	117.56
1	A	63	KZY	CD1-CE1-CZ	2.81	119.81	117.56
1	G	63	KZY	CD1-CE1-CZ	2.80	119.80	117.56
1	E	63	KZY	CD1-CE1-CZ	2.77	119.77	117.56
1	F	63	KZY	CD1-CE1-CZ	2.76	119.77	117.56
1	D	63	KZY	CD1-CE1-CZ	2.75	119.76	117.56
1	H	63	KZY	CD1-CE1-CZ	2.74	119.75	117.56
1	C	63	KZY	CD1-CE1-CZ	2.73	119.74	117.56
1	A	63	KZY	CE2-CD2-CG2	-2.61	117.85	121.25
1	E	63	KZY	CE2-CD2-CG2	-2.60	117.86	121.25
1	C	63	KZY	CE2-CD2-CG2	-2.60	117.86	121.25
1	G	63	KZY	CE2-CD2-CG2	-2.60	117.86	121.25
1	F	63	KZY	CE2-CD2-CG2	-2.58	117.88	121.25
1	H	63	KZY	CE2-CD2-CG2	-2.58	117.88	121.25
1	B	63	KZY	CE2-CD2-CG2	-2.58	117.89	121.25
1	D	63	KZY	CE2-CD2-CG2	-2.53	117.94	121.25
1	D	63	KZY	CA1-C1-N2	-2.19	119.14	123.56
1	H	63	KZY	CA1-C1-N2	-2.17	119.17	123.56

Continued on next page...

Continued from previous page...

Mol	Chain	Res	Type	Atoms	Z	Observed(^{o})	Ideal(^{o})
1	G	63	KZY	CA1-C1-N2	-2.17	119.17	123.56
1	F	63	KZY	CA1-C1-N2	-2.17	119.18	123.56
1	B	63	KZY	CA1-C1-N2	-2.17	119.18	123.56
1	C	63	KZY	CA1-C1-N2	-2.15	119.21	123.56
1	E	63	KZY	CA1-C1-N2	-2.14	119.23	123.56
1	A	63	KZY	CA1-C1-N2	-2.14	119.25	123.56
1	C	63	KZY	O2-C2-N3	2.13	128.58	124.35
1	A	63	KZY	O2-C2-N3	2.12	128.57	124.35
1	F	63	KZY	O2-C2-N3	2.10	128.53	124.35
1	B	63	KZY	O2-C2-N3	2.10	128.52	124.35
1	D	63	KZY	O2-C2-N3	2.10	128.51	124.35
1	H	63	KZY	O2-C2-N3	2.09	128.50	124.35
1	E	63	KZY	O2-C2-N3	2.09	128.50	124.35
1	G	63	KZY	O2-C2-N3	2.08	128.49	124.35

There are no chirality outliers.

All (8) torsion outliers are listed below:

Mol	Chain	Res	Type	Atoms
1	A	63	KZY	N2-CA2-CB2-CG2
1	B	63	KZY	N2-CA2-CB2-CG2
1	C	63	KZY	N2-CA2-CB2-CG2
1	D	63	KZY	N2-CA2-CB2-CG2
1	E	63	KZY	N2-CA2-CB2-CG2
1	F	63	KZY	N2-CA2-CB2-CG2
1	G	63	KZY	N2-CA2-CB2-CG2
1	H	63	KZY	N2-CA2-CB2-CG2

There are no ring outliers.

8 monomers are involved in 62 short contacts:

Mol	Chain	Res	Type	Clashes	Symm-Clashes
1	C	63	KZY	13	0
1	G	63	KZY	7	0
1	B	63	KZY	13	0
1	F	63	KZY	6	0
1	D	63	KZY	5	0
1	E	63	KZY	6	0
1	H	63	KZY	7	0
1	A	63	KZY	5	0

5.5 Carbohydrates (i)

There are no monosaccharides in this entry.

5.6 Ligand geometry (i)

There are no ligands in this entry.

5.7 Other polymers (i)

There are no such residues in this entry.

5.8 Polymer linkage issues (i)

There are no chain breaks in this entry.

6 Fit of model and data (i)

6.1 Protein, DNA and RNA chains (i)

In the following table, the column labelled '#RSRZ> 2' contains the number (and percentage) of RSRZ outliers, followed by percent RSRZ outliers for the chain as percentile scores relative to all X-ray entries and entries of similar resolution. The OWAB column contains the minimum, median, 95th percentile and maximum values of the occupancy-weighted average B-factor per residue. The column labelled 'Q< 0.9' lists the number of (and percentage) of residues with an average occupancy less than 0.9.

Mol	Chain	Analysed	<RSRZ>	#RSRZ>2			OWAB(Å^2)	Q<0.9
1	A	216/255 (84%)	0.13	5 (2%)	60	62	47, 58, 74, 92	0
1	B	214/255 (83%)	-0.04	3 (1%)	75	77	31, 45, 65, 80	0
1	C	215/255 (84%)	0.27	4 (1%)	66	69	47, 61, 73, 82	0
1	D	214/255 (83%)	0.04	5 (2%)	60	62	33, 44, 62, 79	0
1	E	216/255 (84%)	0.24	4 (1%)	66	69	47, 58, 70, 81	0
1	F	216/255 (84%)	-0.05	1 (0%)	91	92	26, 42, 58, 86	0
1	G	216/255 (84%)	0.13	4 (1%)	66	69	46, 58, 75, 91	0
1	H	216/255 (84%)	-0.00	3 (1%)	75	77	33, 49, 70, 96	0
All	All	1723/2040 (84%)	0.09	29 (1%)	70	72	26, 54, 70, 96	0

All (29) RSRZ outliers are listed below:

Mol	Chain	Res	Type	RSRZ
1	A	2	ALA	4.6
1	H	89	TRP	4.0
1	B	165	GLY	3.5
1	G	165	GLY	3.4
1	B	166	GLY	3.2
1	A	213	ALA	3.1
1	G	166	GLY	3.0
1	H	3	VAL	2.6
1	E	2	ALA	2.5
1	E	217	SER	2.4
1	B	164	GLU	2.4
1	G	164	GLU	2.4
1	C	21	HIS	2.3
1	D	71	TYR	2.3
1	H	4	ILE	2.3
1	C	65	ASN	2.3

Continued on next page...

Continued from previous page...

Mol	Chain	Res	Type	RSRZ
1	C	54	TYR	2.3
1	A	184	GLN	2.2
1	E	54	TYR	2.2
1	D	65	ASN	2.1
1	D	3	VAL	2.1
1	C	73	GLU	2.1
1	A	4	ILE	2.1
1	G	2	ALA	2.1
1	D	151	GLY	2.1
1	D	185	LEU	2.0
1	E	76	VAL	2.0
1	F	220	PRO	2.0
1	A	93	MET	2.0

6.2 Non-standard residues in protein, DNA, RNA chains (i)

In the following table, the Atoms column lists the number of modelled atoms in the group and the number defined in the chemical component dictionary. The B-factors column lists the minimum, median, 95th percentile and maximum values of B factors of atoms in the group. The column labelled 'Q< 0.9' lists the number of atoms with occupancy less than 0.9.

Mol	Type	Chain	Res	Atoms	RSCC	RSR	B-factors(Å^2)	Q<0.9
1	KZY	A	63	22/23	0.80	0.24	26,33,42,45	0
1	KZY	H	63	22/23	0.83	0.25	26,33,42,45	0
1	KZY	B	63	22/23	0.84	0.27	26,33,42,45	0
1	KZY	G	63	22/23	0.85	0.24	26,33,42,45	0
1	KZY	D	63	22/23	0.86	0.19	26,33,42,45	0
1	KZY	C	63	22/23	0.88	0.19	26,33,42,45	0
1	KZY	E	63	22/23	0.89	0.16	26,33,42,45	0
1	KZY	F	63	22/23	0.91	0.16	26,33,42,45	0

6.3 Carbohydrates (i)

There are no monosaccharides in this entry.

6.4 Ligands (i)

There are no ligands in this entry.

6.5 Other polymers (i)

There are no such residues in this entry.