Full wwPDB X-ray Structure Validation Report (i)

Nov 2, 2023 – 11:14 AM EDT

PDB ID	:	3LC7
Title	:	Crystal Structure of apo Glyceraldehyde-3-phosphate dehydrogenase 1 (GAPDH1) from methicllin resistant Staphylococcus aureus (MRSA252)
Authors	:	Mukherjee, S.; Dutta, D.; Saha, B.; Das, A.K.
Deposited on	:	2010-01-10
Resolution	:	2.50 Å(reported)

This is a Full wwPDB X-ray Structure Validation Report for a publicly released PDB entry.

We welcome your comments at *validation@mail.wwpdb.org*
A user guide is available at
https://www.wwpdb.org/validation/2017/XrayValidationReportHelp
with specific help available everywhere you see the (i) symbol.

The types of validation reports are described at
http://www.wwpdb.org/validation/2017/FAQs#types.

The following versions of software and data (see references (i)) were used in the production of this report:

MolProbity	:	4.02b-467
Mogul	:	1.8.5 (274361), CSD as541be (2020)
Xtriage (Phenix)	:	1.13
EDS	:	2.36
Percentile statistics	:	20191225.v01 (using entries in the PDB archive December 25th 2019)
Refmac	:	5.8.0158
CCP4	:	7.0.044 (Gargrove)
Ideal geometry (proteins)	:	Engh & Huber (2001)
Ideal geometry (DNA, RNA)	:	Parkinson et al. (1996)
Validation Pipeline (wwPDB-VP)	:	2.36

1 Overall quality at a glance (i)

The following experimental techniques were used to determine the structure:
X-RAY DIFFRACTION

The reported resolution of this entry is 2.50 Å.

Percentile scores (ranging between 0-100) for global validation metrics of the entry are shown in the following graphic. The table shows the number of entries on which the scores are based.

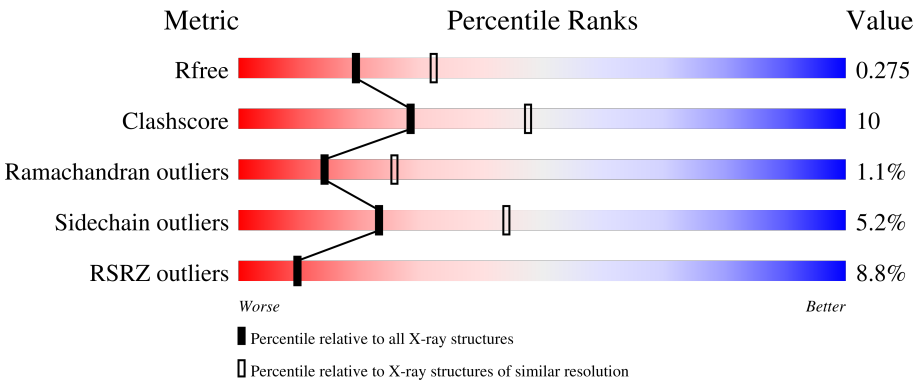

Metric	Whole archive (#Entries)	Similar resolution (#Entries, resolution range(Å))
R_{free}	130704	4661 (2.50-2.50)
Clashscore	141614	5346 (2.50-2.50)
Ramachandran outliers	138981	5231 (2.50-2.50)
Sidechain outliers	138945	5233 (2.50-2.50)
RSRZ outliers	127900	4559 (2.50-2.50)

The table below summarises the geometric issues observed across the polymeric chains and their fit to the electron density. The red, orange, yellow and green segments of the lower bar indicate the fraction of residues that contain outliers for >=3, 2, 1 and 0 types of geometric quality criteria respectively. A grey segment represents the fraction of residues that are not modelled. The numeric value for each fraction is indicated below the corresponding segment, with a dot representing fractions <=5% The upper red bar (where present) indicates the fraction of residues that have poor fit to the electron density. The numeric value is given above the bar.

Mol	Chain	Length	Quality of chain
1	O	339	10% 75% 21% • •
1	P	339	17% 73% 21% • •
1	Q	339	4% 74% 22% • •
1	R	339	3% 77% 19% • •

2 Entry composition (i)

There are 3 unique types of molecules in this entry. The entry contains 10219 atoms, of which 0 are hydrogens and 0 are deuteriums.

In the tables below, the ZeroOcc column contains the number of atoms modelled with zero occupancy, the AltConf column contains the number of residues with at least one atom in alternate conformation and the Trace column contains the number of residues modelled with at most 2 atoms.

- Molecule 1 is a protein called Glyceraldehyde-3-phosphate dehydrogenase 1.

Mol	Chain	Residues	Atoms					ZeroOcc	AltConf	Trace
			Total	C	N	O	S			
1	O	334	2531	1576	435	510	10	0	0	0
1	R	334	2531	1576	435	510	10	0	0	0
1	Q	336	2543	1583	439	511	10	0	0	0
1	P	327	2470	1538	422	500	10	0	0	0

There are 12 discrepancies between the modelled and reference sequences:

Chain	Residue	Modelled	Actual	Comment	Reference
O	-2	HIS	-	expression tag	UNP Q6GIL8
O	-1	SER	-	expression tag	UNP Q6GIL8
O	0	GLY	-	expression tag	UNP Q6GIL8
R	-2	HIS	-	expression tag	UNP Q6GIL8
R	-1	SER	-	expression tag	UNP Q6GIL8
R	0	GLY	-	expression tag	UNP Q6GIL8
Q	-2	HIS	-	expression tag	UNP Q6GIL8
Q	-1	SER	-	expression tag	UNP Q6GIL8
Q	0	GLY	-	expression tag	UNP Q6GIL8
P	-2	HIS	-	expression tag	UNP Q6GIL8
P	-1	SER	-	expression tag	UNP Q6GIL8
P	0	GLY	-	expression tag	UNP Q6GIL8

- Molecule 2 is GLYCEROL (three-letter code: GOL) (formula: $C_3H_8O_3$).

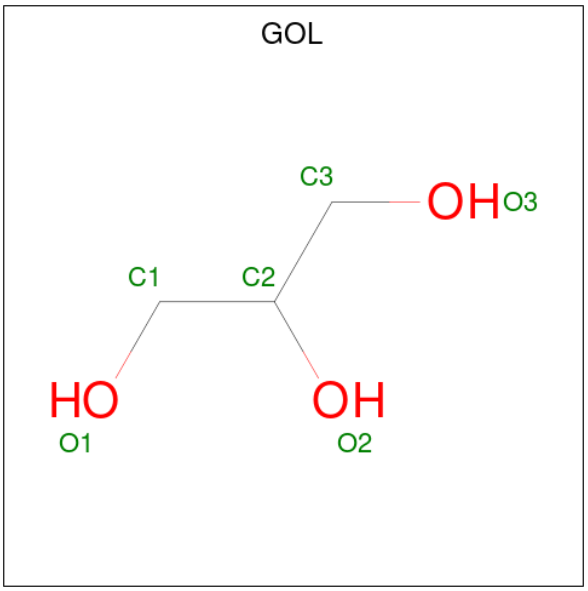

Mol	Chain	Residues	Atoms			ZeroOcc	AltConf
			Total	C	O		
2	O	1	6	3	3	0	0
			Total	C	O		
2	Q	1	6	3	3	0	0

- Molecule 3 is water.

Mol	Chain	Residues	Atoms		ZeroOcc	AltConf
			Total	O		
3	O	34	34	34	0	0
			Total	O		
3	R	43	43	43	0	0
			Total	O		
3	Q	29	29	29	0	0
			Total	O		
3	P	26	26	26	0	0

3 Residue-property plots (i)

These plots are drawn for all protein, RNA, DNA and oligosaccharide chains in the entry. The first graphic for a chain summarises the proportions of the various outlier classes displayed in the second graphic. The second graphic shows the sequence view annotated by issues in geometry and electron density. Residues are color-coded according to the number of geometric quality criteria for which they contain at least one outlier: green = 0, yellow = 1, orange = 2 and red = 3 or more. A red dot above a residue indicates a poor fit to the electron density (RSRZ > 2). Stretches of 2 or more consecutive residues without any outlier are shown as a green connector. Residues present in the sample, but not in the model, are shown in grey.

• Molecule 1: Glyceraldehyde-3-phosphate dehydrogenase 1

Chain O:

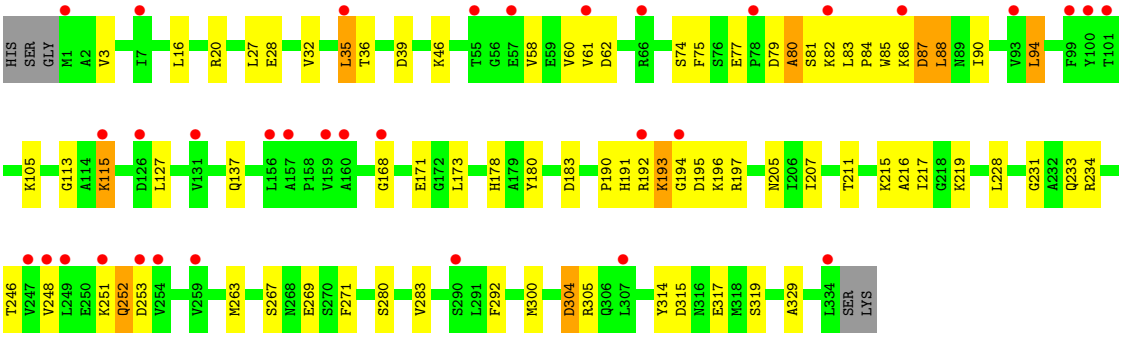

• Molecule 1: Glyceraldehyde-3-phosphate dehydrogenase 1

Chain R:

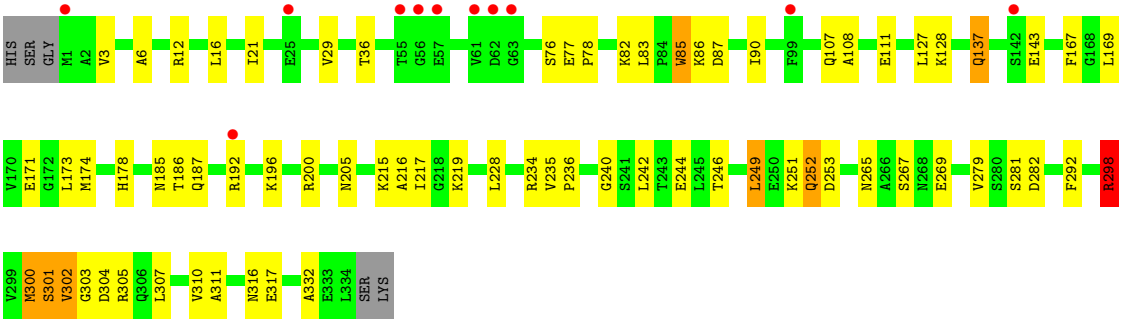

• Molecule 1: Glyceraldehyde-3-phosphate dehydrogenase 1

Chain Q:

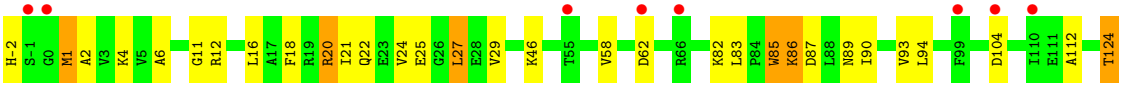

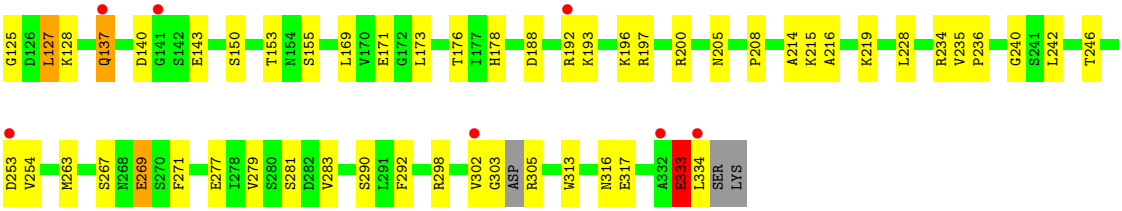

• Molecule 1: Glyceraldehyde-3-phosphate dehydrogenase 1

Chain P:

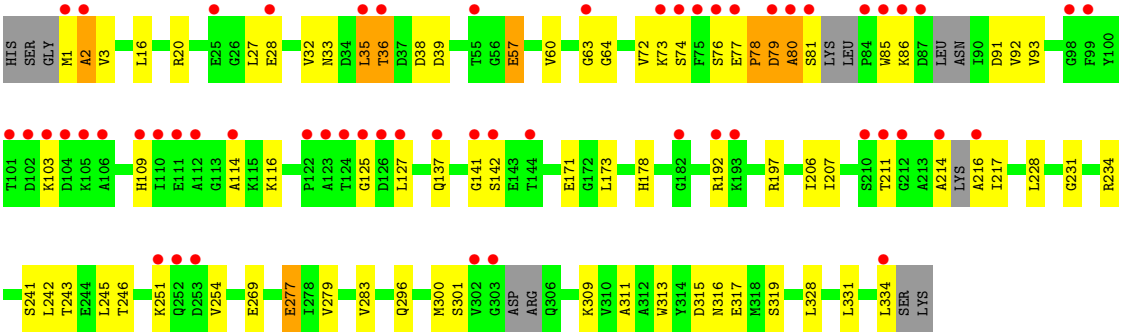

4 Data and refinement statistics (i)

Property	Value	Source
Space group	P 1 21 1	Depositor
Cell constants a, b, c, α, β, γ	64.29Å 94.94Å 86.55Å 90.00° 105.73° 90.00°	Depositor
Resolution (Å)	20.00 – 2.50 19.65 – 2.49	Depositor EDS
% Data completeness (in resolution range)	99.9 (20.00-2.50) 99.5 (19.65-2.49)	Depositor EDS
R_{merge}	0.06	Depositor
R_{sym}	(Not available)	Depositor
$< I/\sigma(I) >$ [1]	3.48 (at 2.50Å)	Xtriage
Refinement program	REFMAC	Depositor
R, R_{free}	0.187 , 0.249 0.226 , 0.275	Depositor DCC
R_{free} test set	355 reflections (1.02%)	wwPDB-VP
Wilson B-factor (Å^2)	30.8	Xtriage
Anisotropy	0.366	Xtriage
Bulk solvent k_{sol}(e/Å^3), B_{sol}(Å^2)	0.36 , 48.5	EDS
L-test for twinning[2]	$< \|L\| > = 0.47$, $< L^2 > = 0.30$	Xtriage
Estimated twinning fraction	No twinning to report.	Xtriage
F_o,F_c correlation	0.91	EDS
Total number of atoms	10219	wwPDB-VP
Average B, all atoms (Å^2)	40.0	wwPDB-VP

Xtriage's analysis on translational NCS is as follows: *The largest off-origin peak in the Patterson function is 4.20% of the height of the origin peak. No significant pseudotranslation is detected.*

[1]Intensities estimated from amplitudes.

[2]Theoretical values of $< |L| >$, $< L^2 >$ for acentric reflections are 0.5, 0.333 respectively for untwinned datasets, and 0.375, 0.2 for perfectly twinned datasets.

5 Model quality (i)

5.1 Standard geometry (i)

Bond lengths and bond angles in the following residue types are not validated in this section: GOL

The Z score for a bond length (or angle) is the number of standard deviations the observed value is removed from the expected value. A bond length (or angle) with $|Z| > 5$ is considered an outlier worth inspection. RMSZ is the root-mean-square of all Z scores of the bond lengths (or angles).

Mol	Chain	Bond lengths		Bond angles	
		RMSZ	$\#\|Z\|>5$	RMSZ	$\#\|Z\|>5$
1	O	0.76	1/2565 (0.0%)	0.81	5/3475 (0.1%)
1	P	0.63	0/2500	0.74	1/3382 (0.0%)
1	Q	0.68	0/2577	0.78	5/3489 (0.1%)
1	R	0.73	1/2565 (0.0%)	0.78	2/3475 (0.1%)
All	All	0.70	2/10207 (0.0%)	0.78	13/13821 (0.1%)

Chiral center outliers are detected by calculating the chiral volume of a chiral center and verifying if the center is modelled as a planar moiety or with the opposite hand.A planarity outlier is detected by checking planarity of atoms in a peptide group, atoms in a mainchain group or atoms of a sidechain that are expected to be planar.

Mol	Chain	#Chirality outliers	#Planarity outliers
1	O	0	1
1	Q	0	1
All	All	0	2

All (2) bond length outliers are listed below:

Mol	Chain	Res	Type	Atoms	Z	Observed(Å)	Ideal(Å)
1	R	302	VAL	CB-CG1	-5.50	1.41	1.52
1	O	28	GLU	CB-CG	-5.28	1.42	1.52

All (13) bond angle outliers are listed below:

Mol	Chain	Res	Type	Atoms	Z	Observed(^{o})	Ideal(^{o})
1	O	35	LEU	CA-CB-CG	9.36	136.82	115.30
1	O	35	LEU	CB-CG-CD2	7.70	124.09	111.00
1	R	298	ARG	NE-CZ-NH1	6.83	123.72	120.30
1	O	252	GLN	N-CA-C	6.41	128.29	111.00
1	Q	27	LEU	CA-CB-CG	6.40	130.02	115.30

Continued on next page...

Continued from previous page...

Mol	Chain	Res	Type	Atoms	Z	Observed(^{o})	Ideal(^{o})
1	Q	124	THR	C-N-CA	6.34	135.62	122.30
1	P	28	GLU	CB-CA-C	-5.89	98.62	110.40
1	Q	124	THR	CA-C-N	5.83	127.86	116.20
1	Q	188	ASP	CB-CG-OD1	5.61	123.34	118.30
1	R	298	ARG	NE-CZ-NH2	-5.55	117.53	120.30
1	O	105	LYS	CB-CG-CD	-5.20	98.07	111.60
1	Q	124	THR	O-C-N	-5.18	114.40	123.20
1	O	94	LEU	CA-CB-CG	5.08	126.98	115.30

There are no chirality outliers.

All (2) planarity outliers are listed below:

Mol	Chain	Res	Type	Group
1	O	192	ARG	Peptide
1	Q	124	THR	Peptide

5.2 Too-close contacts (i)

In the following table, the Non-H and H(model) columns list the number of non-hydrogen atoms and hydrogen atoms in the chain respectively. The H(added) column lists the number of hydrogen atoms added and optimized by MolProbity. The Clashes column lists the number of clashes within the asymmetric unit, whereas Symm-Clashes lists symmetry-related clashes.

Mol	Chain	Non-H	H(model)	H(added)	Clashes	Symm-Clashes
1	O	2531	0	2512	46	4
1	P	2470	0	2438	50	2
1	Q	2543	0	2522	74	3
1	R	2531	0	2512	69	2
2	O	6	0	8	0	0
2	Q	6	0	8	3	0
3	O	34	0	0	1	0
3	P	26	0	0	1	0
3	Q	29	0	0	4	0
3	R	43	0	0	5	0
All	All	10219	0	10000	196	6

The all-atom clashscore is defined as the number of clashes found per 1000 atoms (including hydrogen atoms). The all-atom clashscore for this structure is 10.

All (196) close contacts within the same asymmetric unit are listed below, sorted by their clash magnitude.

Atom-1	Atom-2	Interatomic distance (Å)	Clash overlap (Å)
1:P:141:GLY:HA2	1:P:334:LEU:HD13	1.36	1.06
1:R:307:LEU:HD13	1:Q:173:LEU:HD11	1.39	1.02
1:Q:303:GLY:O	1:Q:305:ARG:N	1.96	0.98
1:R:173:LEU:HD13	1:Q:246:THR:HG21	1.51	0.91
1:R:246:THR:HG21	1:Q:173:LEU:HD13	1.54	0.89
1:R:246:THR:HG21	1:Q:173:LEU:CD1	2.04	0.88
1:R:302:VAL:HG21	1:R:307:LEU:HD12	1.55	0.88
1:R:171:GLU:HB3	1:Q:302:VAL:HG11	1.56	0.85
1:R:173:LEU:CD1	1:Q:246:THR:HG21	2.08	0.84
1:R:216:ALA:HB1	1:R:219:LYS:HE2	1.63	0.81
1:Q:216:ALA:HB1	1:Q:219:LYS:HE2	1.65	0.78
1:R:305:ARG:HD2	1:Q:171:GLU:OE1	1.85	0.77
1:R:171:GLU:CB	1:Q:302:VAL:HG11	2.15	0.76
1:P:141:GLY:CA	1:P:334:LEU:HD13	2.16	0.75
1:Q:215:LYS:HE2	3:Q:349:HOH:O	1.86	0.75
1:Q:192:ARG:HE	1:Q:193:LYS:HG3	1.53	0.73
1:R:77:GLU:OE2	1:R:78:PRO:HD2	1.90	0.72
1:Q:-2:HIS:HB2	1:Q:2:ALA:HB2	1.73	0.71
1:O:79:ASP:O	1:O:81:SER:N	2.25	0.70
1:O:190:PRO:HB3	1:R:36:THR:HG21	1.71	0.70
1:O:87:ASP:O	1:O:88:LEU:O	2.11	0.69
1:P:141:GLY:HA2	1:P:334:LEU:CD1	2.18	0.69
1:R:246:THR:CG2	1:Q:173:LEU:HD13	2.24	0.67
1:R:128:LYS:NZ	1:R:143:GLU:OE2	2.26	0.67
1:Q:137:GLN:HG3	3:Q:366:HOH:O	1.93	0.67
1:R:83:LEU:HD13	1:R:85:TRP:CZ2	2.30	0.66
1:Q:83:LEU:HD13	1:Q:85:TRP:CZ2	2.31	0.66
1:R:303:GLY:O	1:R:304:ASP:CG	2.35	0.65
1:R:300:MET:HE3	1:Q:173:LEU:HD21	1.79	0.65
1:P:3:VAL:HB	1:P:27:LEU:HD23	1.80	0.64
1:O:216:ALA:HB1	1:O:219:LYS:HE2	1.80	0.64
1:Q:196:LYS:NZ	1:P:39:ASP:OD2	2.17	0.63
1:R:167:PHE:HA	1:R:251:LYS:HD3	1.79	0.63
1:O:215:LYS:HE2	3:O:340:HOH:O	1.99	0.63
1:O:3:VAL:HB	1:O:27:LEU:HD23	1.79	0.63
1:R:246:THR:CG2	1:Q:173:LEU:CD1	2.78	0.62
1:R:107:GLN:HG2	3:R:357:HOH:O	2.00	0.62
1:O:180:TYR:CE1	1:R:186:THR:HG22	2.36	0.61
1:R:169:LEU:HD21	1:R:228:LEU:HD21	1.84	0.59
1:Q:-2:HIS:O	1:Q:1:MET:HB2	2.02	0.59
1:Q:277:GLU:HG3	3:Q:364:HOH:O	2.02	0.59
1:R:298:ARG:HG2	1:R:298:ARG:HH11	1.66	0.59

Continued on next page...

Continued from previous page...

Atom-1	Atom-2	Interatomic distance (Å)	Clash overlap (Å)
1:Q:192:ARG:HH21	1:Q:193:LYS:HD2	1.69	0.58
1:R:6:ALA:HB2	1:R:90:ILE:HD12	1.86	0.58
1:O:197:ARG:HB3	1:O:207:ILE:HG23	1.86	0.57
1:R:307:LEU:CD1	1:Q:173:LEU:HD11	2.25	0.57
1:P:35:LEU:O	1:P:36:THR:HG22	2.04	0.56
1:R:279:VAL:HG22	1:Q:200:ARG:NH1	2.21	0.56
1:R:246:THR:HG21	1:Q:173:LEU:HD11	1.86	0.56
1:O:248:VAL:HG11	1:O:305:ARG:HD3	1.88	0.55
1:O:86:LYS:HB3	1:O:113:GLY:HA3	1.88	0.55
1:R:235:VAL:HG11	1:Q:235:VAL:HG11	1.89	0.54
1:R:3:VAL:HG21	1:R:332:ALA:HB1	1.90	0.54
1:O:75:PHE:CE2	1:O:84:PRO:HG3	2.43	0.54
3:R:355:HOH:O	1:Q:173:LEU:HD22	2.08	0.54
1:Q:197:ARG:HD3	1:Q:208:PRO:O	2.08	0.53
1:P:141:GLY:HA2	1:P:334:LEU:HB3	1.91	0.53
1:O:77:GLU:HB3	1:O:83:LEU:HD21	1.91	0.53
1:O:61:VAL:O	1:O:62:ASP:HB2	2.07	0.53
1:P:315:ASP:O	1:P:319:SER:HB2	2.09	0.53
1:R:173:LEU:HD13	1:Q:246:THR:CG2	2.30	0.52
1:R:281:SER:H	1:Q:205:ASN:ND2	2.07	0.52
1:Q:169:LEU:HD21	1:Q:228:LEU:HD21	1.90	0.52
1:P:251:LYS:O	1:P:254:VAL:HG23	2.10	0.52
1:Q:240:GLY:H	1:Q:316:ASN:ND2	2.08	0.52
1:P:35:LEU:C	1:P:36:THR:HG22	2.30	0.52
1:Q:150:SER:HG	1:Q:153:THR:HG1	1.57	0.51
1:P:3:VAL:CB	1:P:27:LEU:HD23	2.40	0.51
1:P:79:ASP:O	1:P:80:ALA:CB	2.59	0.51
1:O:46:LYS:HD3	1:O:58:VAL:HB	1.93	0.51
1:R:167:PHE:HB2	1:R:249:LEU:HG	1.93	0.51
1:R:167:PHE:CB	1:R:249:LEU:HG	2.41	0.50
1:Q:128:LYS:NZ	1:Q:143:GLU:OE2	2.43	0.50
1:P:1:MET:O	1:P:2:ALA:CB	2.59	0.50
1:P:207:ILE:HD13	3:P:338:HOH:O	2.12	0.50
1:Q:86:LYS:HG2	1:Q:87:ASP:N	2.27	0.50
1:R:305:ARG:HD2	1:Q:171:GLU:CD	2.32	0.50
1:Q:333:GLU:O	1:Q:333:GLU:HG2	2.12	0.50
1:R:173:LEU:HD11	1:Q:246:THR:HG21	1.93	0.50
1:Q:155:SER:HA	1:Q:290:SER:HB2	1.93	0.50
1:Q:178:HIS:HB3	1:Q:234:ARG:HD3	1.94	0.50
1:Q:283:VAL:HG11	1:Q:313:TRP:HB3	1.93	0.49
1:P:93:VAL:HG23	1:P:114:ALA:CB	2.43	0.49

Continued on next page...

Continued from previous page...

Atom-1	Atom-2	Interatomic distance (Å)	Clash overlap (Å)
1:R:303:GLY:O	1:R:304:ASP:OD1	2.30	0.49
1:O:171:GLU:HG2	1:O:248:VAL:HB	1.94	0.49
1:P:32:VAL:O	1:P:74:SER:HA	2.13	0.49
1:Q:214:ALA:HB3	3:Q:349:HOH:O	2.11	0.49
1:P:116:LYS:HD3	1:P:331:LEU:HG	1.94	0.49
1:Q:24:VAL:HG12	1:Q:25:GLU:O	2.13	0.49
1:R:215:LYS:HE2	3:R:367:HOH:O	2.13	0.49
1:O:173:LEU:CD1	1:P:246:THR:HG23	2.43	0.48
1:Q:21:ILE:HG21	1:Q:29:VAL:HG23	1.96	0.48
1:Q:263:MET:HG3	1:Q:292:PHE:CZ	2.48	0.48
1:O:263:MET:HG3	1:O:292:PHE:CZ	2.49	0.48
1:R:21:ILE:HG21	1:R:29:VAL:HG23	1.95	0.48
1:P:92:VAL:HG11	1:P:328:LEU:HD12	1.95	0.48
1:O:173:LEU:HD12	1:P:246:THR:CG2	2.44	0.48
1:Q:85:TRP:NE1	1:Q:93:VAL:HG21	2.29	0.48
1:R:178:HIS:HB3	1:R:234:ARG:HD3	1.95	0.48
1:Q:83:LEU:O	1:Q:112:ALA:HB1	2.14	0.47
1:O:305:ARG:O	1:P:171:GLU:OE2	2.33	0.47
1:R:205:ASN:ND2	1:Q:281:SER:H	2.12	0.47
1:O:193:LYS:O	1:O:195:ASP:N	2.45	0.47
1:O:180:TYR:CD1	1:R:186:THR:HG22	2.49	0.47
1:P:178:HIS:HB3	1:P:234:ARG:HD3	1.97	0.47
1:O:205:ASN:ND2	1:P:279:VAL:HG23	2.29	0.47
1:O:246:THR:CG2	1:P:173:LEU:HD12	2.45	0.47
1:R:12:ARG:O	1:R:16:LEU:HG	2.15	0.47
1:R:303:GLY:O	1:R:304:ASP:CB	2.62	0.47
1:Q:12:ARG:N	2:Q:337:GOL:H31	2.30	0.47
1:Q:240:GLY:H	1:Q:316:ASN:HD21	1.62	0.47
1:R:301:SER:HA	1:R:305:ARG:O	2.15	0.47
1:O:280:SER:O	1:O:283:VAL:HG22	2.15	0.47
1:P:16:LEU:CD1	1:P:317:GLU:HB3	2.45	0.47
1:P:64:GLY:HA2	1:P:74:SER:OG	2.15	0.47
1:P:242:LEU:HD11	1:P:311:ALA:HB1	1.95	0.47
1:Q:46:LYS:HD3	1:Q:58:VAL:HB	1.97	0.46
1:O:16:LEU:CD1	1:O:317:GLU:HB3	2.45	0.46
1:Q:12:ARG:H	2:Q:337:GOL:H31	1.80	0.46
1:P:214:ALA:O	1:P:216:ALA:N	2.48	0.46
1:O:215:LYS:HE3	1:O:215:LYS:HB2	1.75	0.46
1:R:242:LEU:HD11	1:R:311:ALA:HB1	1.98	0.46
1:O:77:GLU:HB3	1:O:83:LEU:CD2	2.46	0.46
1:R:137:GLN:HG2	3:R:372:HOH:O	2.16	0.46

Continued on next page...

Continued from previous page...

Atom-1	Atom-2	Interatomic distance (Å)	Clash overlap (Å)
1:P:245:LEU:O	1:P:309:LYS:HA	2.16	0.46
1:R:86:LYS:HG3	1:R:87:ASP:N	2.31	0.46
1:P:64:GLY:HA3	1:P:72:VAL:O	2.15	0.46
1:O:39:ASP:OD2	1:R:196:LYS:NZ	2.39	0.45
1:O:79:ASP:O	1:O:80:ALA:C	2.55	0.45
1:Q:12:ARG:O	1:Q:16:LEU:HG	2.17	0.45
1:O:90:ILE:O	1:O:115:LYS:HD3	2.17	0.45
1:P:141:GLY:CA	1:P:334:LEU:HB3	2.47	0.45
1:O:32:VAL:O	1:O:74:SER:HA	2.16	0.45
1:Q:140:ASP:O	1:Q:334:LEU:HD13	2.17	0.45
1:R:205:ASN:HD22	1:Q:281:SER:H	1.63	0.45
1:O:304:ASP:HB3	1:O:305:ARG:H	1.41	0.45
1:P:211:THR:HG22	1:P:231:GLY:HA2	1.99	0.45
1:P:63:GLY:O	1:P:73:LYS:HA	2.16	0.45
1:Q:176:THR:HA	1:Q:242:LEU:O	2.17	0.44
1:O:27:LEU:HD11	1:O:329:ALA:HB2	1.98	0.44
1:R:217:ILE:HG21	1:R:228:LEU:HD12	1.99	0.44
1:Q:267:SER:HA	1:Q:271:PHE:O	2.17	0.44
1:P:217:ILE:HG21	1:P:228:LEU:HD12	2.00	0.44
1:R:185:ASN:HB3	1:R:187:GLN:O	2.18	0.44
1:O:267:SER:HB2	1:O:271:PHE:O	2.17	0.44
1:Q:215:LYS:HE3	1:Q:215:LYS:HB2	1.87	0.44
1:O:183:ASP:O	1:O:191:HIS:CE1	2.71	0.44
1:P:241:SER:OG	1:P:316:ASN:ND2	2.51	0.44
1:R:171:GLU:HB2	1:Q:302:VAL:HG11	1.96	0.43
1:P:103:LYS:HB3	1:P:125:GLY:HA3	2.00	0.43
1:P:283:VAL:HG11	1:P:313:TRP:HB3	2.00	0.43
1:R:16:LEU:CD1	1:R:317:GLU:HB3	2.48	0.43
1:Q:6:ALA:HB2	1:Q:90:ILE:HD12	1.98	0.43
1:Q:20:ARG:HA	1:Q:20:ARG:HD2	1.76	0.43
1:R:246:THR:CG2	1:Q:173:LEU:HD11	2.48	0.43
1:R:200:ARG:NH1	1:Q:279:VAL:HG22	2.34	0.43
1:P:38:ASP:HB3	1:P:60:VAL:HG13	2.00	0.43
1:R:252:GLN:HG2	1:R:253:ASP:N	2.30	0.43
1:R:305:ARG:CD	1:Q:171:GLU:OE1	2.62	0.43
1:R:240:GLY:H	1:R:316:ASN:ND2	2.16	0.43
1:R:281:SER:CB	1:Q:205:ASN:HD21	2.31	0.43
1:R:292:PHE:CE1	1:R:310:VAL:HB	2.54	0.43
1:O:211:THR:HG22	1:O:231:GLY:HA2	2.00	0.42
1:Q:16:LEU:CD1	1:Q:317:GLU:HB3	2.48	0.42
1:O:83:LEU:HD13	1:O:85:TRP:CZ2	2.54	0.42

Continued on next page...

Continued from previous page...

Atom-1	Atom-2	Interatomic distance (Å)	Clash overlap (Å)
1:Q:269:GLU:H	1:Q:269:GLU:HG3	1.53	0.42
1:P:33:ASN:OD1	1:P:76:SER:N	2.53	0.42
1:P:178:HIS:HA	1:P:241:SER:HB3	2.01	0.42
1:O:178:HIS:HB3	1:O:234:ARG:HD3	2.02	0.42
1:R:173:LEU:CD1	1:Q:246:THR:CG2	2.89	0.42
1:R:77:GLU:OE2	1:R:78:PRO:CD	2.65	0.42
1:R:174:MET:HA	1:R:244:GLU:O	2.20	0.42
1:O:251:LYS:O	1:O:253:ASP:N	2.53	0.42
1:Q:18:PHE:O	1:Q:22:GLN:HG2	2.20	0.42
1:O:315:ASP:O	1:O:319:SER:HB2	2.20	0.41
1:Q:11:GLY:HA3	2:Q:337:GOL:O1	2.20	0.41
1:O:263:MET:HG3	1:O:292:PHE:CE1	2.55	0.41
1:R:86:LYS:HG2	3:R:348:HOH:O	2.21	0.41
1:R:282:ASP:OD1	1:Q:200:ARG:NH2	2.38	0.41
1:P:85:TRP:HH2	1:P:109:HIS:HD1	1.68	0.41
1:O:217:ILE:HG21	1:O:228:LEU:HD12	2.01	0.41
1:R:236:PRO:HB2	1:Q:236:PRO:HB2	2.01	0.41
1:R:108:ALA:O	1:R:111:GLU:HB2	2.21	0.41
1:P:77:GLU:HA	1:P:78:PRO:HD2	1.80	0.41
1:P:243:THR:O	1:P:311:ALA:HA	2.21	0.41
1:O:196:LYS:HE2	1:P:277:GLU:HG3	2.02	0.41
1:O:233:GLN:HE22	1:P:296:GLN:HE22	1.69	0.41
1:O:280:SER:HB3	1:P:206:ILE:HB	2.03	0.41
1:Q:86:LYS:HG2	1:Q:87:ASP:H	1.87	0.40
1:Q:125:GLY:O	1:Q:127:LEU:N	2.51	0.40
1:P:39:ASP:HA	1:P:60:VAL:HG21	2.03	0.40
1:O:246:THR:HG21	1:P:173:LEU:HD12	2.03	0.40
1:P:3:VAL:HG11	1:P:27:LEU:CD2	2.51	0.40
1:R:304:ASP:OD1	1:R:304:ASP:C	2.60	0.40
1:R:86:LYS:HG3	1:R:87:ASP:H	1.86	0.40
1:P:197:ARG:HB3	1:P:207:ILE:HG23	2.02	0.40

All (6) symmetry-related close contacts are listed below. The label for Atom-2 includes the symmetry operator and encoded unit-cell translations to be applied.

Atom-1	Atom-2	Interatomic distance (Å)	Clash overlap (Å)
1:O:251:LYS:NZ	1:R:304:ASP:OD1[1_554]	1.42	0.78
1:O:62:ASP:CB	1:Q:215:LYS:NZ[2_656]	2.01	0.19
1:Q:89:ASN:ND2	1:P:57:GLU:OE2[1_655]	2.05	0.15
1:O:251:LYS:NZ	1:R:304:ASP:CG[1_554]	2.11	0.09

Continued on next page...

Continued from previous page...

Atom-1	Atom-2	Interatomic distance (Å)	Clash overlap (Å)
1:P:142:SER:OG	1:P:277:GLU:OE1[2_545]	2.16	0.04
1:O:62:ASP:O	1:Q:215:LYS:CE[2_656]	2.18	0.02

5.3 Torsion angles (i)

5.3.1 Protein backbone (i)

In the following table, the Percentiles column shows the percent Ramachandran outliers of the chain as a percentile score with respect to all X-ray entries followed by that with respect to entries of similar resolution.

The Analysed column shows the number of residues for which the backbone conformation was analysed, and the total number of residues.

Mol	Chain	Analysed	Favoured	Allowed	Outliers	Percentiles
1	O	332/339 (98%)	306 (92%)	18 (5%)	8 (2%)	6 9
1	P	317/339 (94%)	299 (94%)	14 (4%)	4 (1%)	12 21
1	Q	332/339 (98%)	309 (93%)	21 (6%)	2 (1%)	25 43
1	R	332/339 (98%)	312 (94%)	20 (6%)	0	100 100
All	All	1313/1356 (97%)	1226 (93%)	73 (6%)	14 (1%)	14 26

All (14) Ramachandran outliers are listed below:

Mol	Chain	Res	Type
1	O	80	ALA
1	O	88	LEU
1	O	193	LYS
1	O	194	GLY
1	O	252	GLN
1	P	78	PRO
1	Q	333	GLU
1	P	2	ALA
1	P	80	ALA
1	Q	62	ASP
1	P	86	LYS
1	O	87	ASP
1	O	168	GLY
1	O	60	VAL

5.3.2 Protein sidechains (i)

In the following table, the Percentiles column shows the percent sidechain outliers of the chain as a percentile score with respect to all X-ray entries followed by that with respect to entries of similar resolution.

The Analysed column shows the number of residues for which the sidechain conformation was analysed, and the total number of residues.

Mol	Chain	Analysed	Rotameric	Outliers	Percentiles	
1	O	272/276 (99%)	260 (96%)	12 (4%)	28	52
1	P	265/276 (96%)	251 (95%)	14 (5%)	22	43
1	Q	273/276 (99%)	257 (94%)	16 (6%)	19	37
1	R	272/276 (99%)	258 (95%)	14 (5%)	24	45
All	All	1082/1104 (98%)	1026 (95%)	56 (5%)	23	44

All (56) residues with a non-rotameric sidechain are listed below:

Mol	Chain	Res	Type
1	O	20	ARG
1	O	35	LEU
1	O	36	THR
1	O	82	LYS
1	O	94	LEU
1	O	115	LYS
1	O	127	LEU
1	O	137	GLN
1	O	269	GLU
1	O	300	MET
1	O	304	ASP
1	O	314	TYR
1	R	76	SER
1	R	82	LYS
1	R	85	TRP
1	R	127	LEU
1	R	137	GLN
1	R	192	ARG
1	R	249	LEU
1	R	252	GLN
1	R	265	ASN
1	R	267	SER
1	R	269	GLU
1	R	298	ARG

Continued on next page...

Continued from previous page...

Mol	Chain	Res	Type
1	R	300	MET
1	R	301	SER
1	Q	1	MET
1	Q	4	LYS
1	Q	20	ARG
1	Q	27	LEU
1	Q	82	LYS
1	Q	85	TRP
1	Q	86	LYS
1	Q	94	LEU
1	Q	104	ASP
1	Q	127	LEU
1	Q	137	GLN
1	Q	253	ASP
1	Q	254	VAL
1	Q	269	GLU
1	Q	298	ARG
1	Q	333	GLU
1	P	20	ARG
1	P	35	LEU
1	P	36	THR
1	P	57	GLU
1	P	79	ASP
1	P	81	SER
1	P	91	ASP
1	P	127	LEU
1	P	137	GLN
1	P	192	ARG
1	P	269	GLU
1	P	277	GLU
1	P	300	MET
1	P	301	SER

Sometimes sidechains can be flipped to improve hydrogen bonding and reduce clashes. All (25) such sidechains are listed below:

Mol	Chain	Res	Type
1	O	68	ASN
1	O	133	ASN
1	O	191	HIS
1	O	205	ASN
1	O	258	GLN
1	O	265	ASN

Continued on next page...

Continued from previous page...

Mol	Chain	Res	Type
1	O	296	GLN
1	O	316	ASN
1	R	68	ASN
1	R	205	ASN
1	R	265	ASN
1	R	296	GLN
1	R	316	ASN
1	Q	-2	HIS
1	Q	68	ASN
1	Q	133	ASN
1	Q	137	GLN
1	Q	205	ASN
1	Q	316	ASN
1	P	68	ASN
1	P	133	ASN
1	P	205	ASN
1	P	265	ASN
1	P	296	GLN
1	P	316	ASN

5.3.3 RNA (i)

There are no RNA molecules in this entry.

5.4 Non-standard residues in protein, DNA, RNA chains (i)

There are no non-standard protein/DNA/RNA residues in this entry.

5.5 Carbohydrates (i)

There are no monosaccharides in this entry.

5.6 Ligand geometry (i)

2 ligands are modelled in this entry.

In the following table, the Counts columns list the number of bonds (or angles) for which Mogul statistics could be retrieved, the number of bonds (or angles) that are observed in the model and the number of bonds (or angles) that are defined in the Chemical Component Dictionary. The Link column lists molecule types, if any, to which the group is linked. The Z score for a bond length (or angle) is the number of standard deviations the observed value is removed from the

expected value. A bond length (or angle) with $|Z| > 2$ is considered an outlier worth inspection. RMSZ is the root-mean-square of all Z scores of the bond lengths (or angles).

Mol	Type	Chain	Res	Link	Bond lengths			Bond angles		
					Counts	RMSZ	$\#\|Z\| > 2$	Counts	RMSZ	$\#\|Z\| > 2$
2	GOL	O	337	-	5,5,5	0.47	0	5,5,5	0.91	0
2	GOL	Q	337	-	5,5,5	0.55	0	5,5,5	0.52	0

In the following table, the Chirals column lists the number of chiral outliers, the number of chiral centers analysed, the number of these observed in the model and the number defined in the Chemical Component Dictionary. Similar counts are reported in the Torsion and Rings columns. '-' means no outliers of that kind were identified.

Mol	Type	Chain	Res	Link	Chirals	Torsions	Rings
2	GOL	O	337	-	-	4/4/4/4	-
2	GOL	Q	337	-	-	2/4/4/4	-

There are no bond length outliers.

There are no bond angle outliers.

There are no chirality outliers.

All (6) torsion outliers are listed below:

Mol	Chain	Res	Type	Atoms
2	O	337	GOL	O1-C1-C2-C3
2	O	337	GOL	C1-C2-C3-O3
2	Q	337	GOL	C1-C2-C3-O3
2	O	337	GOL	O1-C1-C2-O2
2	O	337	GOL	O2-C2-C3-O3
2	Q	337	GOL	O2-C2-C3-O3

There are no ring outliers.

1 monomer is involved in 3 short contacts:

Mol	Chain	Res	Type	Clashes	Symm-Clashes
2	Q	337	GOL	3	0

5.7 Other polymers (i)

There are no such residues in this entry.

5.8 Polymer linkage issues (i)

There are no chain breaks in this entry.

6 Fit of model and data (i)

6.1 Protein, DNA and RNA chains (i)

In the following table, the column labelled '#RSRZ> 2' contains the number (and percentage) of RSRZ outliers, followed by percent RSRZ outliers for the chain as percentile scores relative to all X-ray entries and entries of similar resolution. The OWAB column contains the minimum, median, 95th percentile and maximum values of the occupancy-weighted average B-factor per residue. The column labelled 'Q< 0.9' lists the number of (and percentage) of residues with an average occupancy less than 0.9.

Mol	Chain	Analysed	<RSRZ>	#RSRZ>2			OWAB(Å^2)	Q<0.9
1	O	334/339 (98%)	0.77	34 (10%)	6	6	23, 50, 76, 92	0
1	P	327/339 (96%)	0.80	57 (17%)	1	1	14, 25, 58, 95	0
1	Q	336/339 (99%)	0.42	15 (4%)	33	36	21, 45, 68, 84	0
1	R	334/339 (98%)	0.16	11 (3%)	46	50	17, 35, 56, 73	0
All	All	1331/1356 (98%)	0.53	117 (8%)	10	10	14, 38, 69, 95	0

All (117) RSRZ outliers are listed below:

Mol	Chain	Res	Type	RSRZ
1	O	35	LEU	7.1
1	P	84	PRO	7.0
1	P	81	SER	7.0
1	P	86	LYS	6.9
1	P	99	PHE	6.7
1	P	1	MET	6.5
1	P	87	ASP	6.2
1	R	1	MET	6.0
1	P	80	ALA	5.7
1	R	62	ASP	5.6
1	P	103	LYS	5.5
1	P	85	TRP	4.7
1	P	212	GLY	4.7
1	P	104	ASP	4.7
1	O	194	GLY	4.6
1	P	75	PHE	4.6
1	P	303	GLY	4.4
1	O	61	VAL	4.4
1	P	76	SER	4.4
1	O	334	LEU	4.3
1	Q	137	GLN	4.1

Continued on next page...

Continued from previous page...

Mol	Chain	Res	Type	RSRZ
1	Q	334	LEU	4.0
1	P	79	ASP	3.9
1	R	55	THR	3.9
1	P	114	ALA	3.8
1	P	35	LEU	3.8
1	O	93	VAL	3.8
1	P	105	LYS	3.7
1	P	110	ILE	3.7
1	P	25	GLU	3.7
1	P	334	LEU	3.6
1	O	192	ARG	3.5
1	P	252	GLN	3.5
1	Q	141	GLY	3.5
1	O	248	VAL	3.5
1	P	126	ASP	3.4
1	P	2	ALA	3.4
1	P	124	THR	3.4
1	P	101	THR	3.3
1	Q	-1	SER	3.3
1	P	211	THR	3.3
1	P	141	GLY	3.2
1	O	253	ASP	3.2
1	R	57	GLU	3.2
1	P	192	ARG	3.2
1	P	102	ASP	3.1
1	P	106	ALA	3.1
1	P	112	ALA	3.1
1	O	1	MET	3.0
1	P	302	VAL	3.0
1	P	125	GLY	3.0
1	P	253	ASP	2.9
1	R	142	SER	2.9
1	P	111	GLU	2.9
1	Q	192	ARG	2.8
1	O	157	ALA	2.8
1	P	142	SER	2.8
1	P	193	LYS	2.8
1	Q	62	ASP	2.8
1	P	122	PRO	2.8
1	O	78	PRO	2.8
1	P	144	THR	2.7
1	O	159	VAL	2.7

Continued on next page...

Continued from previous page...

Mol	Chain	Res	Type	RSRZ
1	P	210	SER	2.7
1	P	55	THR	2.7
1	O	100	TYR	2.7
1	P	98	GLY	2.7
1	O	247	VAL	2.6
1	O	99	PHE	2.6
1	O	249	LEU	2.6
1	Q	99	PHE	2.6
1	P	63	GLY	2.5
1	Q	0	GLY	2.5
1	P	28	GLU	2.5
1	P	127	LEU	2.5
1	O	55	THR	2.5
1	P	123	ALA	2.5
1	P	109	HIS	2.5
1	P	74	SER	2.5
1	Q	253	ASP	2.4
1	O	254	VAL	2.4
1	Q	55	THR	2.4
1	O	307	LEU	2.4
1	Q	302	VAL	2.4
1	R	61	VAL	2.4
1	P	214	ALA	2.4
1	O	251	LYS	2.3
1	R	25	GLU	2.3
1	O	156	LEU	2.3
1	O	131	VAL	2.3
1	O	160	ALA	2.3
1	Q	104	ASP	2.3
1	O	168	GLY	2.3
1	O	259	VAL	2.3
1	Q	66	ARG	2.3
1	R	99	PHE	2.3
1	O	82	LYS	2.2
1	P	73	LYS	2.2
1	P	137	GLN	2.2
1	P	251	LYS	2.2
1	O	101	THR	2.2
1	Q	332	ALA	2.2
1	O	66	ARG	2.1
1	P	182	GLY	2.1
1	P	77	GLU	2.1

Continued on next page...

Continued from previous page...

Mol	Chain	Res	Type	RSRZ
1	O	7	ILE	2.1
1	O	290	SER	2.1
1	O	57	GLU	2.1
1	R	63	GLY	2.1
1	R	192	ARG	2.1
1	P	36	THR	2.0
1	R	56	GLY	2.0
1	P	216	ALA	2.0
1	O	115	LYS	2.0
1	Q	110	ILE	2.0
1	O	126	ASP	2.0
1	O	86	LYS	2.0

6.2 Non-standard residues in protein, DNA, RNA chains (i)

There are no non-standard protein/DNA/RNA residues in this entry.

6.3 Carbohydrates (i)

There are no monosaccharides in this entry.

6.4 Ligands (i)

In the following table, the Atoms column lists the number of modelled atoms in the group and the number defined in the chemical component dictionary. The B-factors column lists the minimum, median, 95th percentile and maximum values of B factors of atoms in the group. The column labelled 'Q< 0.9' lists the number of atoms with occupancy less than 0.9.

Mol	Type	Chain	Res	Atoms	RSCC	RSR	B-factors(Å^2)	Q<0.9
2	GOL	Q	337	6/6	0.90	0.17	32,36,46,47	0
2	GOL	O	337	6/6	0.92	0.18	29,36,44,45	0

6.5 Other polymers (i)

There are no such residues in this entry.