wwPDB X-ray Structure Validation Summary Report (i)

Jun 13, 2024 – 01:31 AM EDT

PDB ID	:	3KHD
Title	:	Crystal Structure of PFF1300w.
Authors	:	Wernimont, A.K.; Hutchinson, A.; Hassanali, A.; Mackenzie, F.; Cossar, D.; Bochkarev, A.; Arrowsmith, C.H.; Bountra, C.; Weigelt, J.; Edwards, A.M.; Hui, R.; Pizarro, J.C.; Bakszt, R.; Hills, T.; Structural Genomics Consortium (SGC)
Deposited on	:	2009-10-30
Resolution	:	2.70 Å(reported)

This is a wwPDB X-ray Structure Validation Summary Report for a publicly released PDB entry.

We welcome your comments at *validation@mail.wwpdb.org*
A user guide is available at
https://www.wwpdb.org/validation/2017/XrayValidationReportHelp
with specific help available everywhere you see the (i) symbol.

The types of validation reports are described at
http://www.wwpdb.org/validation/2017/FAQs#types.

The following versions of software and data (see references (1)) were used in the production of this report:

MolProbity	:	4.02b-467
Xtriage (Phenix)	:	1.20.1
EDS	:	2.36.2
Percentile statistics	:	20191225.v01 (using entries in the PDB archive December 25th 2019)
Refmac	:	5.8.0158
CCP4	:	7.0.044 (Gargrove)
Ideal geometry (proteins)	:	Engh & Huber (2001)
Ideal geometry (DNA, RNA)	:	Parkinson et al. (1996)
Validation Pipeline (wwPDB-VP)	:	2.36.2

1 Overall quality at a glance (i)

The following experimental techniques were used to determine the structure:
X-RAY DIFFRACTION

The reported resolution of this entry is 2.70 Å.

Percentile scores (ranging between 0-100) for global validation metrics of the entry are shown in the following graphic. The table shows the number of entries on which the scores are based.

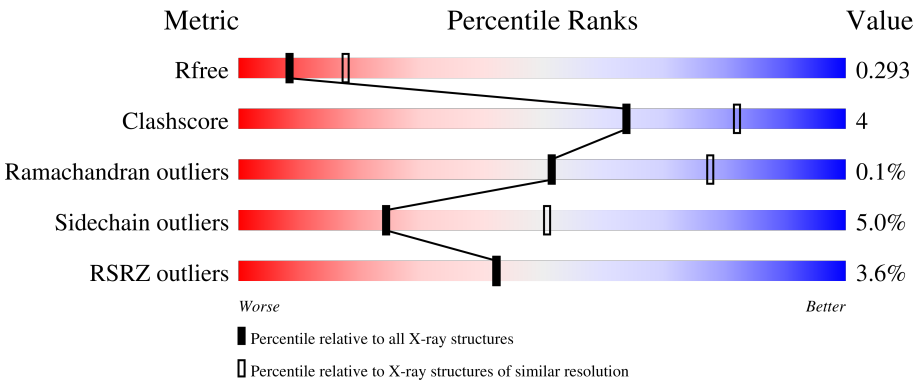

Metric	Whole archive (#Entries)	Similar resolution (#Entries, resolution range(Å))
R_{free}	130704	2808 (2.70-2.70)
Clashscore	141614	3122 (2.70-2.70)
Ramachandran outliers	138981	3069 (2.70-2.70)
Sidechain outliers	138945	3069 (2.70-2.70)
RSRZ outliers	127900	2737 (2.70-2.70)

The table below summarises the geometric issues observed across the polymeric chains and their fit to the electron density. The red, orange, yellow and green segments of the lower bar indicate the fraction of residues that contain outliers for >=3, 2, 1 and 0 types of geometric quality criteria respectively. A grey segment represents the fraction of residues that are not modelled. The numeric value for each fraction is indicated below the corresponding segment, with a dot representing fractions <=5% The upper red bar (where present) indicates the fraction of residues that have poor fit to the electron density. The numeric value is given above the bar.

Mol	Chain	Length	Quality of chain
1	A	520	4% 84% 9% 6%
1	B	520	84% 11% • •
1	C	520	5% 66% 8% 26%
1	D	520	3% 63% 11% 26%

2 Entry composition (i)

There are 2 unique types of molecules in this entry. The entry contains 12368 atoms, of which 0 are hydrogens and 0 are deuteriums.

In the tables below, the ZeroOcc column contains the number of atoms modelled with zero occupancy, the AltConf column contains the number of residues with at least one atom in alternate conformation and the Trace column contains the number of residues modelled with at most 2 atoms.

- Molecule 1 is a protein called Pyruvate kinase.

Mol	Chain	Residues	Atoms					ZeroOcc	AltConf	Trace
			Total	C	N	O	S			
1	A	487	3456	2169	589	669	29	0	0	0
1	B	500	3678	2317	630	701	30	0	0	0
1	C	384	2551	1584	439	505	23	0	0	0
1	D	386	2682	1686	460	512	24	0	0	0

There are 72 discrepancies between the modelled and reference sequences:

Chain	Residue	Modelled	Actual	Comment	Reference
A	1	MET	-	expression tag	UNP C6KTA4
A	2	HIS	-	expression tag	UNP C6KTA4
A	3	HIS	-	expression tag	UNP C6KTA4
A	4	HIS	-	expression tag	UNP C6KTA4
A	5	HIS	-	expression tag	UNP C6KTA4
A	6	HIS	-	expression tag	UNP C6KTA4
A	7	HIS	-	expression tag	UNP C6KTA4
A	8	SER	-	expression tag	UNP C6KTA4
A	9	SER	-	expression tag	UNP C6KTA4
A	10	GLY	-	expression tag	UNP C6KTA4
A	11	ARG	-	expression tag	UNP C6KTA4
A	12	GLU	-	expression tag	UNP C6KTA4
A	13	ASN	-	expression tag	UNP C6KTA4
A	14	LEU	-	expression tag	UNP C6KTA4
A	15	TYR	-	expression tag	UNP C6KTA4
A	16	PHE	-	expression tag	UNP C6KTA4
A	17	GLN	-	expression tag	UNP C6KTA4
A	18	GLY	-	expression tag	UNP C6KTA4
B	1	MET	-	expression tag	UNP C6KTA4
B	2	HIS	-	expression tag	UNP C6KTA4
B	3	HIS	-	expression tag	UNP C6KTA4

Continued on next page...

Continued from previous page...

Chain	Residue	Modelled	Actual	Comment	Reference
B	4	HIS	-	expression tag	UNP C6KTA4
B	5	HIS	-	expression tag	UNP C6KTA4
B	6	HIS	-	expression tag	UNP C6KTA4
B	7	HIS	-	expression tag	UNP C6KTA4
B	8	SER	-	expression tag	UNP C6KTA4
B	9	SER	-	expression tag	UNP C6KTA4
B	10	GLY	-	expression tag	UNP C6KTA4
B	11	ARG	-	expression tag	UNP C6KTA4
B	12	GLU	-	expression tag	UNP C6KTA4
B	13	ASN	-	expression tag	UNP C6KTA4
B	14	LEU	-	expression tag	UNP C6KTA4
B	15	TYR	-	expression tag	UNP C6KTA4
B	16	PHE	-	expression tag	UNP C6KTA4
B	17	GLN	-	expression tag	UNP C6KTA4
B	18	GLY	-	expression tag	UNP C6KTA4
C	1	MET	-	expression tag	UNP C6KTA4
C	2	HIS	-	expression tag	UNP C6KTA4
C	3	HIS	-	expression tag	UNP C6KTA4
C	4	HIS	-	expression tag	UNP C6KTA4
C	5	HIS	-	expression tag	UNP C6KTA4
C	6	HIS	-	expression tag	UNP C6KTA4
C	7	HIS	-	expression tag	UNP C6KTA4
C	8	SER	-	expression tag	UNP C6KTA4
C	9	SER	-	expression tag	UNP C6KTA4
C	10	GLY	-	expression tag	UNP C6KTA4
C	11	ARG	-	expression tag	UNP C6KTA4
C	12	GLU	-	expression tag	UNP C6KTA4
C	13	ASN	-	expression tag	UNP C6KTA4
C	14	LEU	-	expression tag	UNP C6KTA4
C	15	TYR	-	expression tag	UNP C6KTA4
C	16	PHE	-	expression tag	UNP C6KTA4
C	17	GLN	-	expression tag	UNP C6KTA4
C	18	GLY	-	expression tag	UNP C6KTA4
D	1	MET	-	expression tag	UNP C6KTA4
D	2	HIS	-	expression tag	UNP C6KTA4
D	3	HIS	-	expression tag	UNP C6KTA4
D	4	HIS	-	expression tag	UNP C6KTA4
D	5	HIS	-	expression tag	UNP C6KTA4
D	6	HIS	-	expression tag	UNP C6KTA4
D	7	HIS	-	expression tag	UNP C6KTA4
D	8	SER	-	expression tag	UNP C6KTA4
D	9	SER	-	expression tag	UNP C6KTA4

Continued on next page...

Continued from previous page...

Chain	Residue	Modelled	Actual	Comment	Reference
D	10	GLY	-	expression tag	UNP C6KTA4
D	11	ARG	-	expression tag	UNP C6KTA4
D	12	GLU	-	expression tag	UNP C6KTA4
D	13	ASN	-	expression tag	UNP C6KTA4
D	14	LEU	-	expression tag	UNP C6KTA4
D	15	TYR	-	expression tag	UNP C6KTA4
D	16	PHE	-	expression tag	UNP C6KTA4
D	17	GLN	-	expression tag	UNP C6KTA4
D	18	GLY	-	expression tag	UNP C6KTA4

- Molecule 2 is water.

Mol	Chain	Residues	Atoms		ZeroOcc	AltConf
			Total	O		
2	C	1	1	1	0	0

3 Residue-property plots (i)

These plots are drawn for all protein, RNA, DNA and oligosaccharide chains in the entry. The first graphic for a chain summarises the proportions of the various outlier classes displayed in the second graphic. The second graphic shows the sequence view annotated by issues in geometry and electron density. Residues are color-coded according to the number of geometric quality criteria for which they contain at least one outlier: green = 0, yellow = 1, orange = 2 and red = 3 or more. A red dot above a residue indicates a poor fit to the electron density (RSRZ > 2). Stretches of 2 or more consecutive residues without any outlier are shown as a green connector. Residues present in the sample, but not in the model, are shown in grey.

• Molecule 1: Pyruvate kinase

Chain A:

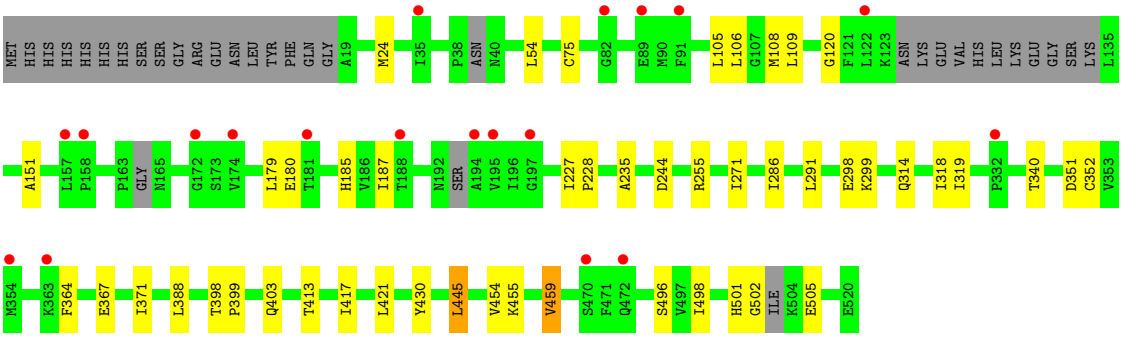

• Molecule 1: Pyruvate kinase

Chain B:

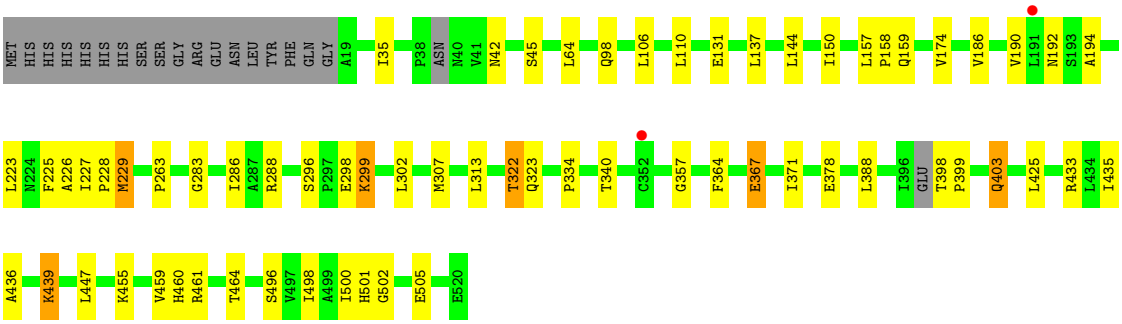

• Molecule 1: Pyruvate kinase

Chain C:

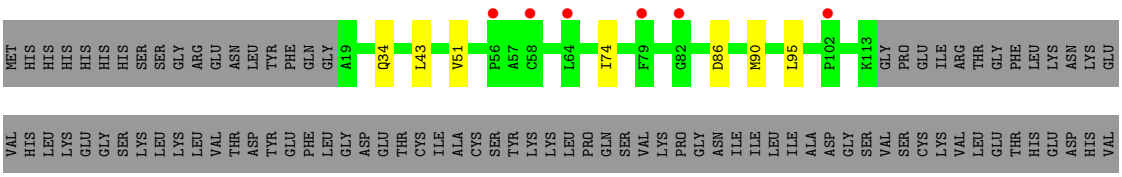

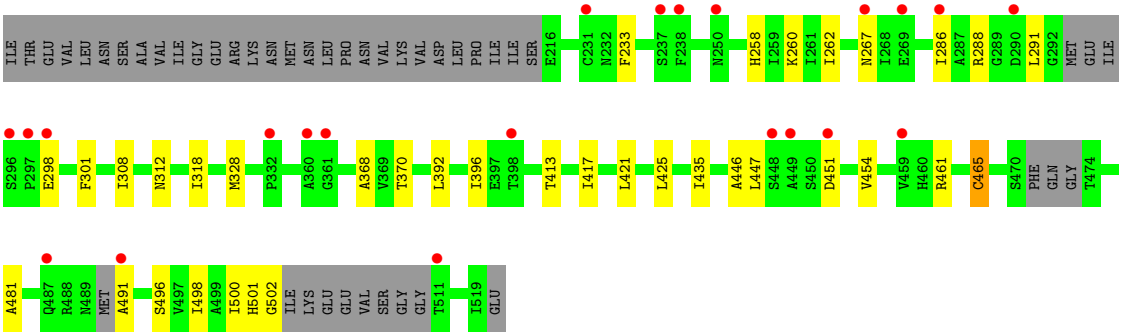

- Molecule 1: Pyruvate kinase

Chain D:

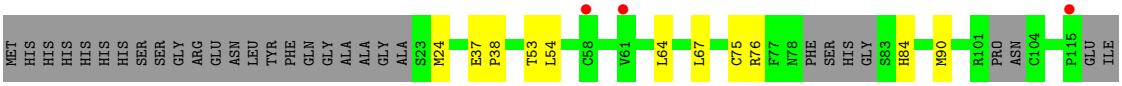

4 Data and refinement statistics (i)

Property	Value	Source
Space group	P 1 21 1	Depositor
Cell constants a, b, c, α, β, γ	108.75Å 94.28Å 125.16Å 90.00° 94.60° 90.00°	Depositor
Resolution (Å)	35.00 – 2.70 35.01 – 2.70	Depositor EDS
% Data completeness (in resolution range)	98.7 (35.00-2.70) 98.7 (35.01-2.70)	Depositor EDS
R_{merge}	0.10	Depositor
R_{sym}	0.07	Depositor
$< I/\sigma(I) >$ [1]	2.19 (at 2.68Å)	Xtriage
Refinement program	REFMAC	Depositor
R, R_{free}	0.262 , 0.297 0.259 , 0.293	Depositor DCC
R_{free} test set	3463 reflections (5.05%)	wwPDB-VP
Wilson B-factor (Å^2)	61.8	Xtriage
Anisotropy	0.081	Xtriage
Bulk solvent k_{sol}(e/Å^3), B_{sol}(Å^2)	0.29 , 42.2	EDS
L-test for twinning[2]	$< \|L\| > = 0.50$, $< L^2 > = 0.33$	Xtriage
Estimated twinning fraction	No twinning to report.	Xtriage
F_o,F_c correlation	0.91	EDS
Total number of atoms	12368	wwPDB-VP
Average B, all atoms (Å^2)	29.0	wwPDB-VP

Xtriage's analysis on translational NCS is as follows: *The largest off-origin peak in the Patterson function is 3.24% of the height of the origin peak. No significant pseudotranslation is detected.*

[1]Intensities estimated from amplitudes.

[2]Theoretical values of $< |L| >$, $< L^2 >$ for acentric reflections are 0.5, 0.333 respectively for untwinned datasets, and 0.375, 0.2 for perfectly twinned datasets.

5 Model quality (i)

5.1 Standard geometry (i)

The Z score for a bond length (or angle) is the number of standard deviations the observed value is removed from the expected value. A bond length (or angle) with $|Z| > 5$ is considered an outlier worth inspection. RMSZ is the root-mean-square of all Z scores of the bond lengths (or angles).

Mol	Chain	Bond lengths		Bond angles	
		RMSZ	$\#\|Z\| >5$	RMSZ	$\#\|Z\| >5$
1	A	0.30	0/3493	0.46	0/4743
1	B	0.33	0/3721	0.48	0/5043
1	C	0.30	0/2573	0.47	0/3516
1	D	0.30	0/2705	0.45	0/3675
All	All	0.31	0/12492	0.47	0/16977

There are no bond length outliers.

There are no bond angle outliers.

There are no chirality outliers.

There are no planarity outliers.

5.2 Too-close contacts (i)

In the following table, the Non-H and H(model) columns list the number of non-hydrogen atoms and hydrogen atoms in the chain respectively. The H(added) column lists the number of hydrogen atoms added and optimized by MolProbity. The Clashes column lists the number of clashes within the asymmetric unit, whereas Symm-Clashes lists symmetry-related clashes.

Mol	Chain	Non-H	H(model)	H(added)	Clashes	Symm-Clashes
1	A	3456	0	3322	23	0
1	B	3678	0	3696	36	0
1	C	2551	0	2272	19	0
1	D	2682	0	2546	32	0
2	C	1	0	0	0	0
All	All	12368	0	11836	102	0

The all-atom clashscore is defined as the number of clashes found per 1000 atoms (including hydrogen atoms). The all-atom clashscore for this structure is 4.

The worst 5 of 102 close contacts within the same asymmetric unit are listed below, sorted by their clash magnitude.

Atom-1	Atom-2	Interatomic distance (Å)	Clash overlap (Å)
1:D:53:THR:HG22	1:D:76:ARG:HE	1.44	0.81
1:B:398:THR:HB	1:B:399:PRO:HD3	1.64	0.79
1:B:364:PHE:HB3	1:B:367:GLU:HG3	1.65	0.77
1:B:435:ILE:HD11	1:B:500:ILE:HG21	1.68	0.76
1:A:298:GLU:HG2	1:A:299:LYS:HG3	1.71	0.71

There are no symmetry-related clashes.

5.3 Torsion angles (i)

5.3.1 Protein backbone (i)

In the following table, the Percentiles column shows the percent Ramachandran outliers of the chain as a percentile score with respect to all X-ray entries followed by that with respect to entries of similar resolution.

The Analysed column shows the number of residues for which the backbone conformation was analysed, and the total number of residues.

Mol	Chain	Analysed	Favoured	Allowed	Outliers	Percentiles	
1	A	475/520 (91%)	459 (97%)	16 (3%)	0	100	100
1	B	494/520 (95%)	482 (98%)	11 (2%)	1 (0%)	47	73
1	C	372/520 (72%)	363 (98%)	9 (2%)	0	100	100
1	D	370/520 (71%)	360 (97%)	10 (3%)	0	100	100
All	All	1711/2080 (82%)	1664 (97%)	46 (3%)	1 (0%)	51	78

All (1) Ramachandran outliers are listed below:

Mol	Chain	Res	Type
1	B	505	GLU

5.3.2 Protein sidechains (i)

In the following table, the Percentiles column shows the percent sidechain outliers of the chain as a percentile score with respect to all X-ray entries followed by that with respect to entries of similar resolution.

The Analysed column shows the number of residues for which the sidechain conformation was analysed, and the total number of residues.

Mol	Chain	Analysed	Rotameric	Outliers	Percentiles	
1	A	346/445 (78%)	334 (96%)	12 (4%)	36	65
1	B	391/445 (88%)	374 (96%)	17 (4%)	29	57
1	C	226/445 (51%)	212 (94%)	14 (6%)	18	40
1	D	258/445 (58%)	240 (93%)	18 (7%)	15	35
All	All	1221/1780 (69%)	1160 (95%)	61 (5%)	24	51

5 of 61 residues with a non-rotameric sidechain are listed below:

Mol	Chain	Res	Type
1	B	498	ILE
1	D	371	ILE
1	C	288	ARG
1	D	342	VAL
1	D	496	SER

Sometimes sidechains can be flipped to improve hydrogen bonding and reduce clashes. 5 of 21 such sidechains are listed below:

Mol	Chain	Res	Type
1	C	98	GLN
1	C	518	GLN
1	D	501	HIS
1	D	312	ASN
1	C	501	HIS

5.3.3 RNA (i)

There are no RNA molecules in this entry.

5.4 Non-standard residues in protein, DNA, RNA chains (i)

There are no non-standard protein/DNA/RNA residues in this entry.

5.5 Carbohydrates (i)

There are no monosaccharides in this entry.

5.6 Ligand geometry (i)

There are no ligands in this entry.

5.7 Other polymers (i)

There are no such residues in this entry.

5.8 Polymer linkage issues (i)

There are no chain breaks in this entry.

6 Fit of model and data (i)

6.1 Protein, DNA and RNA chains (i)

In the following table, the column labelled '#RSRZ> 2' contains the number (and percentage) of RSRZ outliers, followed by percent RSRZ outliers for the chain as percentile scores relative to all X-ray entries and entries of similar resolution. The OWAB column contains the minimum, median, 95th percentile and maximum values of the occupancy-weighted average B-factor per residue. The column labelled 'Q< 0.9' lists the number of (and percentage) of residues with an average occupancy less than 0.9.

Mol	Chain	Analysed	<RSRZ>	#RSRZ>2			OWAB(Å^2)	Q<0.9
1	A	487/520 (93%)	0.15	19 (3%)	39	38	26, 31, 34, 35	0
1	B	500/520 (96%)	-0.08	2 (0%)	92	93	20, 27, 31, 34	0
1	C	384/520 (73%)	0.32	28 (7%)	15	13	28, 31, 34, 35	0
1	D	386/520 (74%)	0.08	15 (3%)	39	38	26, 31, 33, 34	0
All	All	1757/2080 (84%)	0.11	64 (3%)	42	42	20, 30, 33, 35	0

The worst 5 of 64 RSRZ outliers are listed below:

Mol	Chain	Res	Type	RSRZ
1	C	296	SER	5.0
1	A	363	LYS	4.1
1	C	231	CYS	4.0
1	C	267	ASN	3.6
1	A	158	PRO	3.2

6.2 Non-standard residues in protein, DNA, RNA chains (i)

There are no non-standard protein/DNA/RNA residues in this entry.

6.3 Carbohydrates (i)

There are no monosaccharides in this entry.

6.4 Ligands (i)

There are no ligands in this entry.

6.5 Other polymers (i)

There are no such residues in this entry.