wwPDB X-ray Structure Validation Summary Report (i)

Nov 15, 2023 – 06:31 PM JST

PDB ID	:	6JZ5
Title	:	b-glucuronidase from Ruminococcus gnavus in complex with D-glucuronic acid
Authors	:	Dashnyam, P.; Lin, H.Y.
Deposited on	:	2019-04-30
Resolution	:	1.58 Å(reported)

This is a wwPDB X-ray Structure Validation Summary Report for a publicly released PDB entry.

We welcome your comments at *validation@mail.wwpdb.org*
A user guide is available at
https://www.wwpdb.org/validation/2017/XrayValidationReportHelp
with specific help available everywhere you see the (i) symbol.

The types of validation reports are described at
http://www.wwpdb.org/validation/2017/FAQs#types.

The following versions of software and data (see references (i)) were used in the production of this report:

MolProbity	:	4.02b-467
Mogul	:	1.8.5 (274361), CSD as541be (2020)
Xtriage (Phenix)	:	1.13
EDS	:	2.36
buster-report	:	1.1.7 (2018)
Percentile statistics	:	20191225.v01 (using entries in the PDB archive December 25th 2019)
Refmac	:	5.8.0158
CCP4	:	7.0.044 (Gargrove)
Ideal geometry (proteins)	:	Engh & Huber (2001)
Ideal geometry (DNA, RNA)	:	Parkinson et al. (1996)
Validation Pipeline (wwPDB-VP)	:	2.36

1 Overall quality at a glance (i)

The following experimental techniques were used to determine the structure:
X-RAY DIFFRACTION

The reported resolution of this entry is 1.58 Å.

Percentile scores (ranging between 0-100) for global validation metrics of the entry are shown in the following graphic. The table shows the number of entries on which the scores are based.

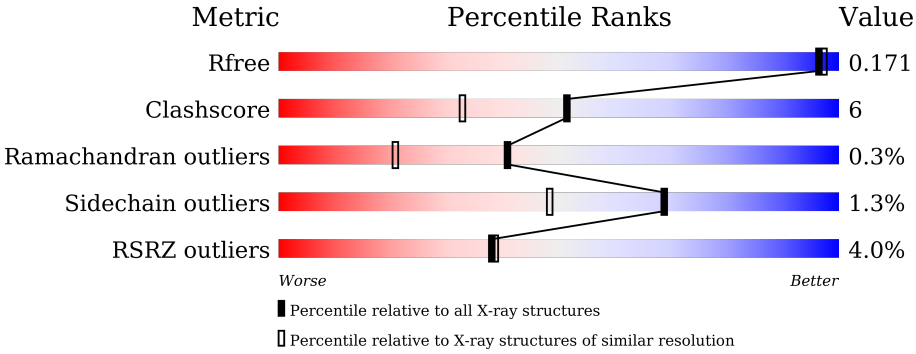

Metric	Whole archive (#Entries)	Similar resolution (#Entries, resolution range(Å))
R_{free}	130704	5534 (1.60-1.56)
Clashscore	141614	5861 (1.60-1.56)
Ramachandran outliers	138981	5708 (1.60-1.56)
Sidechain outliers	138945	5703 (1.60-1.56)
RSRZ outliers	127900	5431 (1.60-1.56)

The table below summarises the geometric issues observed across the polymeric chains and their fit to the electron density. The red, orange, yellow and green segments of the lower bar indicate the fraction of residues that contain outliers for >=3, 2, 1 and 0 types of geometric quality criteria respectively. A grey segment represents the fraction of residues that are not modelled. The numeric value for each fraction is indicated below the corresponding segment, with a dot representing fractions <=5% The upper red bar (where present) indicates the fraction of residues that have poor fit to the electron density. The numeric value is given above the bar.

Mol	Chain	Length	Quality of chain
1	A	603	3% 85% 9% 5%
1	B	603	5% 86% 9% • •

2 Entry composition (i)

There are 3 unique types of molecules in this entry. The entry contains 10503 atoms, of which 18 are hydrogens and 0 are deuteriums.

In the tables below, the ZeroOcc column contains the number of atoms modelled with zero occupancy, the AltConf column contains the number of residues with at least one atom in alternate conformation and the Trace column contains the number of residues modelled with at most 2 atoms.

- Molecule 1 is a protein called Beta-glucuronidase.

Mol	Chain	Residues	Atoms					ZeroOcc	AltConf	Trace
			Total	C	N	O	S			
1	A	572	4689	3024	763	879	23	0	0	0
1	B	576	4720	3044	767	885	24	0	0	0

- Molecule 2 is beta-D-glucopyranuronic acid (three-letter code: BDP) (formula: $C_6H_{10}O_7$) (labeled as "Ligand of Interest" by depositor).

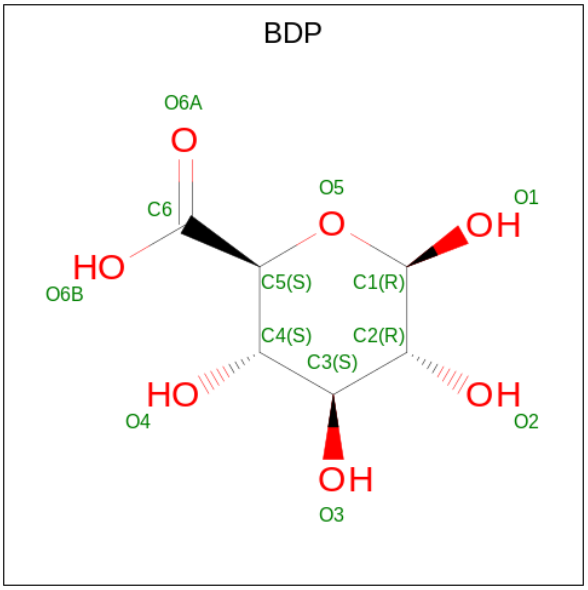

Mol	Chain	Residues	Atoms				ZeroOcc	AltConf
			Total	C	H	O		
2	A	1	22	6	9	7	0	0
2	B	1	22	6	9	7	0	0

- Molecule 3 is water.

Mol	Chain	Residues	Atoms		ZeroOcc	AltConf
			Total	O		
3	A	545	545	545	0	0
			Total	O		
3	B	505	505	505	0	0

3 Residue-property plots (i)

These plots are drawn for all protein, RNA, DNA and oligosaccharide chains in the entry. The first graphic for a chain summarises the proportions of the various outlier classes displayed in the second graphic. The second graphic shows the sequence view annotated by issues in geometry and electron density. Residues are color-coded according to the number of geometric quality criteria for which they contain at least one outlier: green = 0, yellow = 1, orange = 2 and red = 3 or more. A red dot above a residue indicates a poor fit to the electron density (RSRZ > 2). Stretches of 2 or more consecutive residues without any outlier are shown as a green connector. Residues present in the sample, but not in the model, are shown in grey.

• Molecule 1: Beta-glucuronidase

Chain A:

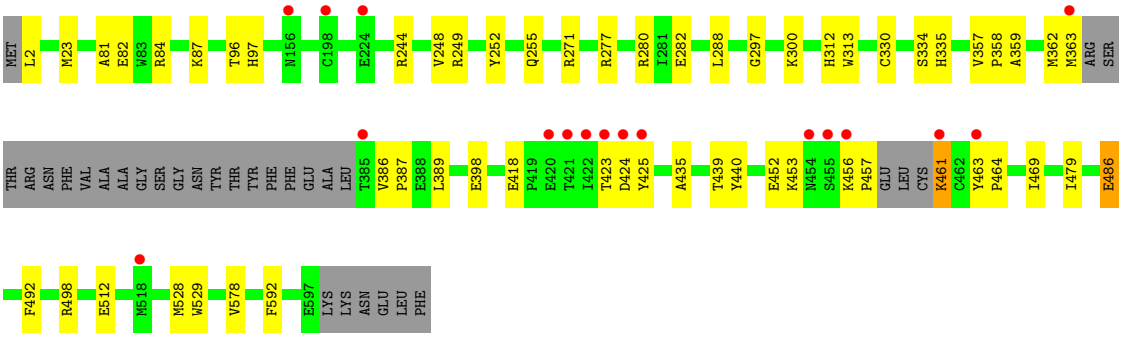

• Molecule 1: Beta-glucuronidase

Chain B:

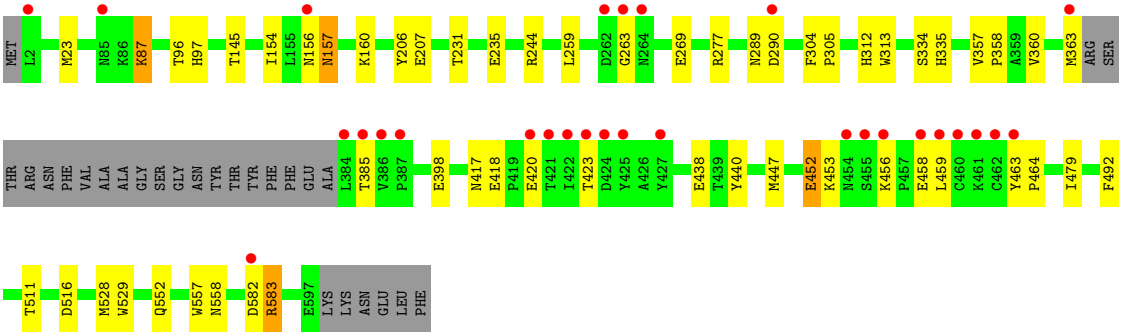

4 Data and refinement statistics (i)

Property	Value	Source
Space group	C 1 2 1	Depositor
Cell constants a, b, c, α, β, γ	162.55Å 103.18Å 112.46Å 90.00° 130.99° 90.00°	Depositor
Resolution (Å)	29.69 – 1.58 29.69 – 1.58	Depositor EDS
% Data completeness (in resolution range)	82.8 (29.69-1.58) 96.0 (29.69-1.58)	Depositor EDS
R_{merge}	0.07	Depositor
R_{sym}	(Not available)	Depositor
$< I/\sigma(I) >$ [1]	2.78 (at 1.58Å)	Xtriage
Refinement program	PHENIX 1.9_1692	Depositor
R, R_{free}	0.154 , 0.170 0.158 , 0.171	Depositor DCC
R_{free} test set	2004 reflections (1.06%)	wwPDB-VP
Wilson B-factor (Å^2)	12.4	Xtriage
Anisotropy	0.018	Xtriage
Bulk solvent k_{sol}(e/Å^3), B_{sol}(Å^2)	0.41 , 57.5	EDS
L-test for twinning[2]	$< \|L\| > = 0.47$, $< L^2 > = 0.30$	Xtriage
Estimated twinning fraction	0.021 for -h-2*l,-k,l	Xtriage
F_o,F_c correlation	0.96	EDS
Total number of atoms	10503	wwPDB-VP
Average B, all atoms (Å^2)	18.0	wwPDB-VP

Xtriage's analysis on translational NCS is as follows: *The largest off-origin peak in the Patterson function is 4.39% of the height of the origin peak. No significant pseudotranslation is detected.*

[1]Intensities estimated from amplitudes.

[2]Theoretical values of $< |L| >$, $< L^2 >$ for acentric reflections are 0.5, 0.333 respectively for untwinned datasets, and 0.375, 0.2 for perfectly twinned datasets.

5 Model quality (i)

5.1 Standard geometry (i)

Bond lengths and bond angles in the following residue types are not validated in this section: BDP

The Z score for a bond length (or angle) is the number of standard deviations the observed value is removed from the expected value. A bond length (or angle) with $|Z| > 5$ is considered an outlier worth inspection. RMSZ is the root-mean-square of all Z scores of the bond lengths (or angles).

Mol	Chain	Bond lengths		Bond angles	
		RMSZ	$\#\|Z\|>5$	RMSZ	$\#\|Z\|>5$
1	A	0.39	0/4822	0.54	0/6537
1	B	0.37	0/4854	0.54	0/6582
All	All	0.38	0/9676	0.54	0/13119

There are no bond length outliers.

There are no bond angle outliers.

There are no chirality outliers.

There are no planarity outliers.

5.2 Too-close contacts (i)

In the following table, the Non-H and H(model) columns list the number of non-hydrogen atoms and hydrogen atoms in the chain respectively. The H(added) column lists the number of hydrogen atoms added and optimized by MolProbity. The Clashes column lists the number of clashes within the asymmetric unit, whereas Symm-Clashes lists symmetry-related clashes.

Mol	Chain	Non-H	H(model)	H(added)	Clashes	Symm-Clashes
1	A	4689	0	4476	62	0
1	B	4720	0	4510	46	0
2	A	13	9	9	1	0
2	B	13	9	9	0	0
3	A	545	0	0	6	0
3	B	505	0	0	2	0
All	All	10485	18	9004	103	0

The all-atom clashscore is defined as the number of clashes found per 1000 atoms (including hydrogen atoms). The all-atom clashscore for this structure is 6.

The worst 5 of 103 close contacts within the same asymmetric unit are listed below, sorted by

their clash magnitude.

Atom-1	Atom-2	Interatomic distance (Å)	Clash overlap (Å)
1:A:423:THR:HB	1:A:425:TYR:CE2	1.91	1.06
1:A:359:ALA:HB1	1:A:362:MET:HE1	1.42	1.00
1:A:423:THR:CB	1:A:425:TYR:CE2	2.52	0.93
1:A:248:VAL:HG23	1:A:288:LEU:HD23	1.52	0.90
1:A:248:VAL:HG23	1:A:288:LEU:CD2	2.03	0.87

There are no symmetry-related clashes.

5.3 Torsion angles (i)

5.3.1 Protein backbone (i)

In the following table, the Percentiles column shows the percent Ramachandran outliers of the chain as a percentile score with respect to all X-ray entries followed by that with respect to entries of similar resolution.

The Analysed column shows the number of residues for which the backbone conformation was analysed, and the total number of residues.

Mol	Chain	Analysed	Favoured	Allowed	Outliers	Percentiles	
1	A	566/603 (94%)	549 (97%)	17 (3%)	0	100	100
1	B	572/603 (95%)	552 (96%)	17 (3%)	3 (0%)	29	10
All	All	1138/1206 (94%)	1101 (97%)	34 (3%)	3 (0%)	41	21

All (3) Ramachandran outliers are listed below:

Mol	Chain	Res	Type
1	B	157	ASN
1	B	583	ARG
1	B	263	GLY

5.3.2 Protein sidechains (i)

In the following table, the Percentiles column shows the percent sidechain outliers of the chain as a percentile score with respect to all X-ray entries followed by that with respect to entries of similar resolution.

The Analysed column shows the number of residues for which the sidechain conformation was analysed, and the total number of residues.

Mol	Chain	Analysed	Rotameric	Outliers	Percentiles	
1	A	499/525 (95%)	493 (99%)	6 (1%)	71	52
1	B	503/525 (96%)	496 (99%)	7 (1%)	67	45
All	All	1002/1050 (95%)	989 (99%)	13 (1%)	69	48

5 of 13 residues with a non-rotameric sidechain are listed below:

Mol	Chain	Res	Type
1	B	244	ARG
1	B	277	ARG
1	B	511	THR
1	B	458	GLU
1	B	492	PHE

Sometimes sidechains can be flipped to improve hydrogen bonding and reduce clashes. There are no such sidechains identified.

5.3.3 RNA (i)

There are no RNA molecules in this entry.

5.4 Non-standard residues in protein, DNA, RNA chains (i)

There are no non-standard protein/DNA/RNA residues in this entry.

5.5 Carbohydrates (i)

There are no monosaccharides in this entry.

5.6 Ligand geometry (i)

2 ligands are modelled in this entry.

In the following table, the Counts columns list the number of bonds (or angles) for which Mogul statistics could be retrieved, the number of bonds (or angles) that are observed in the model and the number of bonds (or angles) that are defined in the Chemical Component Dictionary. The Link column lists molecule types, if any, to which the group is linked. The Z score for a bond length (or angle) is the number of standard deviations the observed value is removed from the expected value. A bond length (or angle) with $|Z| > 2$ is considered an outlier worth inspection. RMSZ is the root-mean-square of all Z scores of the bond lengths (or angles).

Mol	Type	Chain	Res	Link	Bond lengths			Bond angles		
					Counts	RMSZ	$\#\|Z\| > 2$	Counts	RMSZ	$\#\|Z\| > 2$
2	BDP	A	701	-	13,13,13	1.39	3 (23%)	18,19,19	1.34	1 (5%)
2	BDP	B	701	-	13,13,13	1.33	0	18,19,19	1.00	0

In the following table, the Chirals column lists the number of chiral outliers, the number of chiral centers analysed, the number of these observed in the model and the number defined in the Chemical Component Dictionary. Similar counts are reported in the Torsion and Rings columns. '-' means no outliers of that kind were identified.

Mol	Type	Chain	Res	Link	Chirals	Torsions	Rings
2	BDP	A	701	-	-	0/4/24/24	0/1/1/1
2	BDP	B	701	-	-	0/4/24/24	0/1/1/1

All (3) bond length outliers are listed below:

Mol	Chain	Res	Type	Atoms	Z	Observed(Å)	Ideal(Å)
2	A	701	BDP	C5-C6	-2.19	1.48	1.53
2	A	701	BDP	C4-C3	-2.15	1.46	1.52
2	A	701	BDP	O6B-C6	-2.05	1.23	1.30

All (1) bond angle outliers are listed below:

Mol	Chain	Res	Type	Atoms	Z	Observed(^{o})	Ideal(^{o})
2	A	701	BDP	O4-C4-C3	4.01	119.62	110.35

There are no chirality outliers.

There are no torsion outliers.

There are no ring outliers.

1 monomer is involved in 1 short contact:

Mol	Chain	Res	Type	Clashes	Symm-Clashes
2	A	701	BDP	1	0

The following is a two-dimensional graphical depiction of Mogul quality analysis of bond lengths, bond angles, torsion angles, and ring geometry for all instances of the Ligand of Interest. In addition, ligands with molecular weight > 250 and outliers as shown on the validation Tables will also be included. For torsion angles, if less then 5% of the Mogul distribution of torsion angles is within 10 degrees of the torsion angle in question, then that torsion angle is considered an outlier. Any bond that is central to one or more torsion angles identified as an outlier by Mogul will be highlighted in the graph. For rings, the root-mean-square deviation (RMSD) between the ring in question and similar rings identified by Mogul is calculated over all ring torsion angles. If the average RMSD is greater than 60 degrees and the minimal RMSD between the ring in question and

any Mogul-identified rings is also greater than 60 degrees, then that ring is considered an outlier. The outliers are highlighted in purple. The color gray indicates Mogul did not find sufficient equivalents in the CSD to analyse the geometry.

Ligand BDP A 701

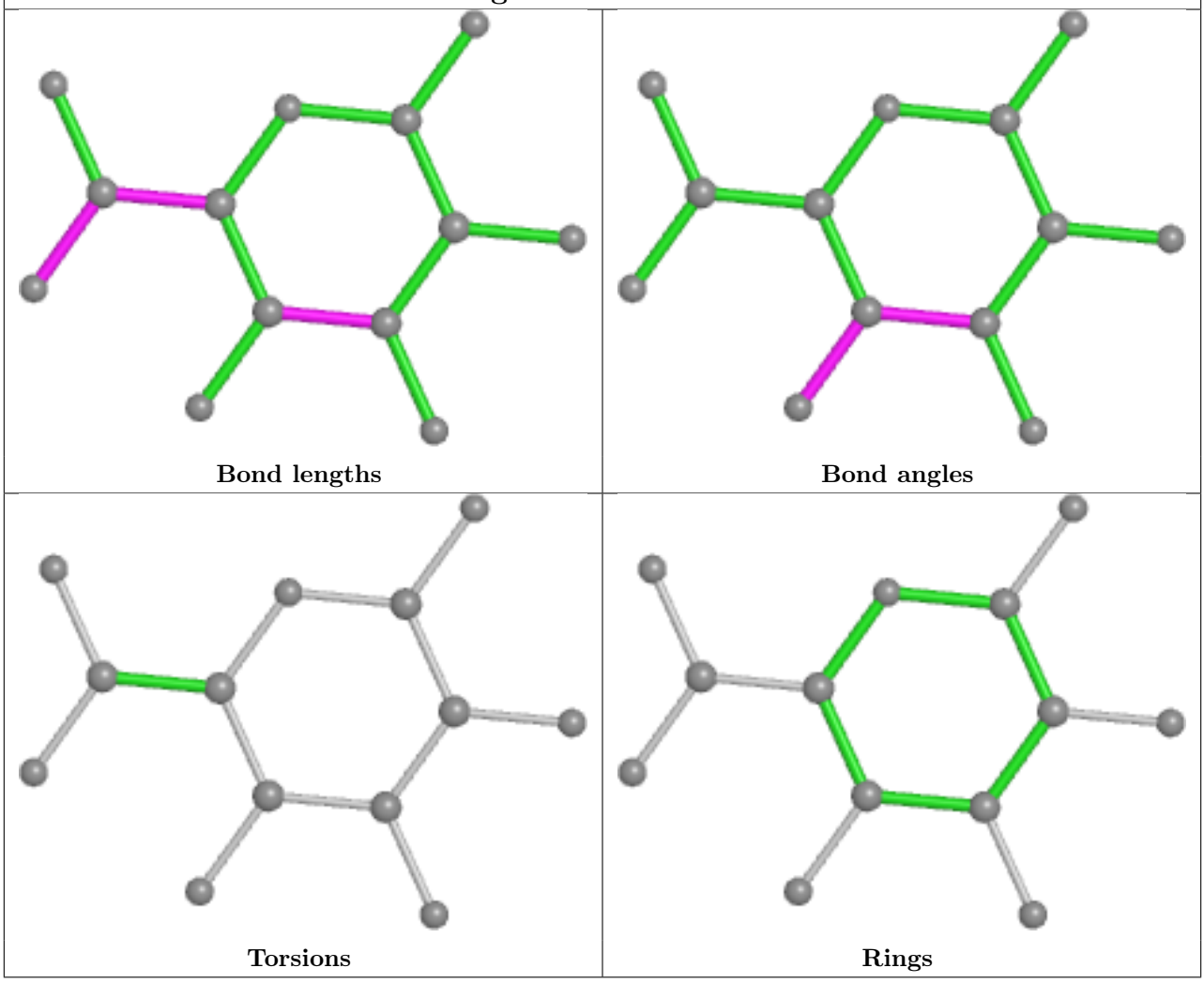

Ligand BDP B 701

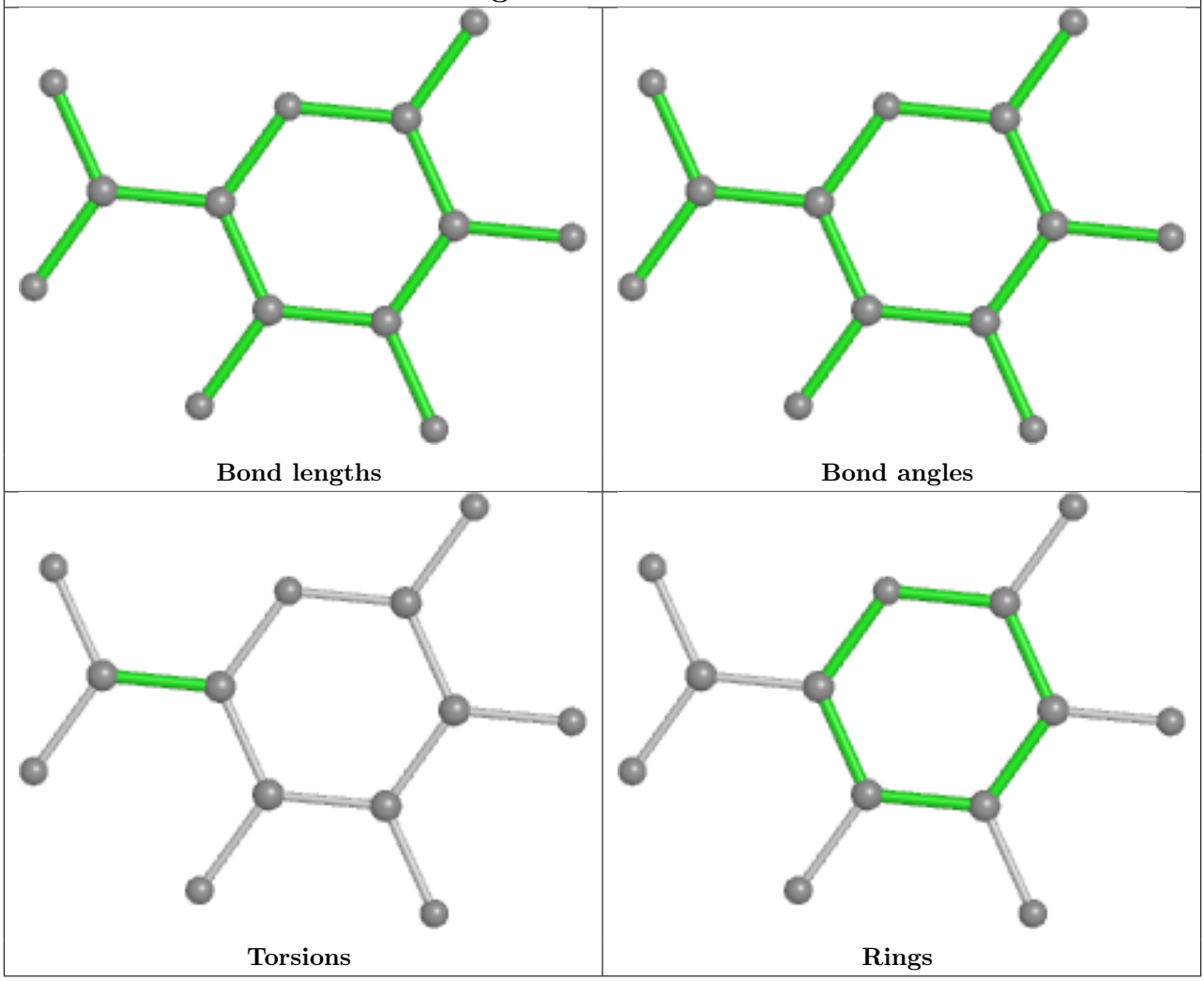

5.7 Other polymers (i)

There are no such residues in this entry.

5.8 Polymer linkage issues (i)

There are no chain breaks in this entry.

6 Fit of model and data (i)

6.1 Protein, DNA and RNA chains (i)

In the following table, the column labelled '#RSRZ> 2' contains the number (and percentage) of RSRZ outliers, followed by percent RSRZ outliers for the chain as percentile scores relative to all X-ray entries and entries of similar resolution. The OWAB column contains the minimum, median, 95th percentile and maximum values of the occupancy-weighted average B-factor per residue. The column labelled 'Q< 0.9' lists the number of (and percentage) of residues with an average occupancy less than 0.9.

Mol	Chain	Analysed	<RSRZ>	#RSRZ>2			OWAB(Å^2)	Q<0.9
1	A	572/603 (94%)	-0.12	17 (2%)	50	51	7, 13, 33, 75	0
1	B	576/603 (95%)	0.00	29 (5%)	28	29	8, 14, 41, 88	0
All	All	1148/1206 (95%)	-0.06	46 (4%)	38	39	7, 14, 37, 88	0

The worst 5 of 46 RSRZ outliers are listed below:

Mol	Chain	Res	Type	RSRZ
1	A	422	ILE	11.9
1	B	459	LEU	11.4
1	B	425	TYR	11.2
1	B	422	ILE	11.0
1	A	425	TYR	10.2

6.2 Non-standard residues in protein, DNA, RNA chains (i)

There are no non-standard protein/DNA/RNA residues in this entry.

6.3 Carbohydrates (i)

There are no monosaccharides in this entry.

6.4 Ligands (i)

In the following table, the Atoms column lists the number of modelled atoms in the group and the number defined in the chemical component dictionary. The B-factors column lists the minimum, median, 95th percentile and maximum values of B factors of atoms in the group. The column labelled 'Q< 0.9' lists the number of atoms with occupancy less than 0.9.

Mol	Type	Chain	Res	Atoms	RSCC	RSR	B-factors(Å^2)	Q<0.9
2	BDP	A	701	13/13	0.98	0.06	8,12,17,20	0
2	BDP	B	701	13/13	0.98	0.05	9,11,19,23	0

The following is a graphical depiction of the model fit to experimental electron density of all instances of the Ligand of Interest. In addition, ligands with molecular weight > 250 and outliers as shown on the geometry validation Tables will also be included. Each fit is shown from different orientation to approximate a three-dimensional view.

Electron density around BDP A 701:

2mF$_o$-DF$_c$ (at 0.7 rmsd) in gray
mF$_o$-DF$_c$ (at 3 rmsd) in purple (negative) and green (positive)

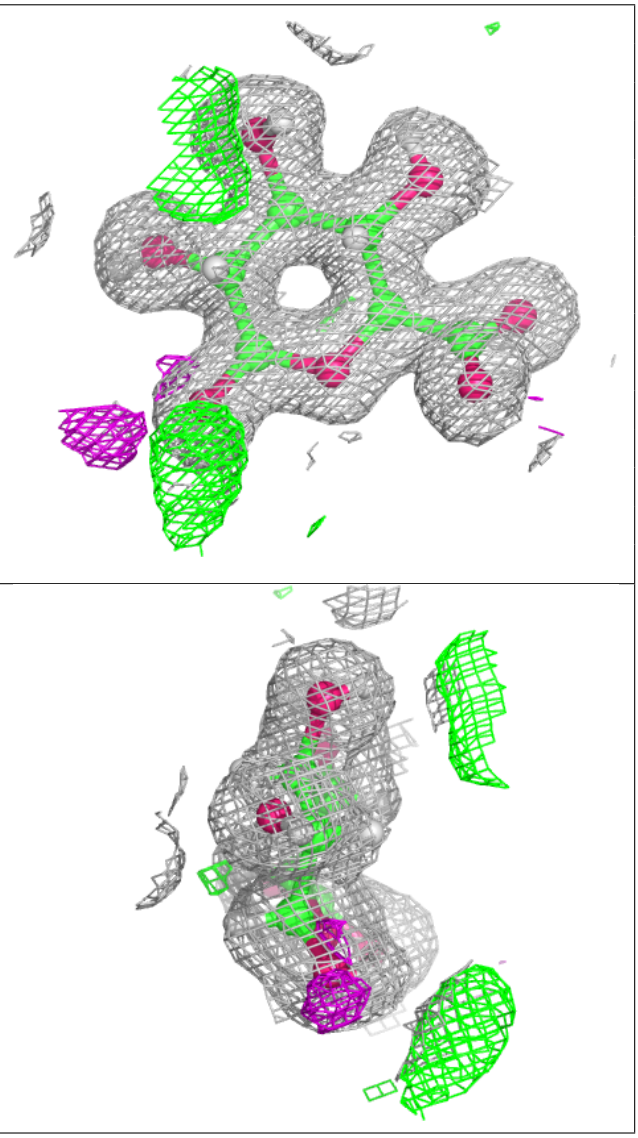

Electron density around BDP B 701:

$2mF_o$-DF_c (at 0.7 rmsd) in gray
mF_o-DF_c (at 3 rmsd) in purple (negative)
and green (positive)

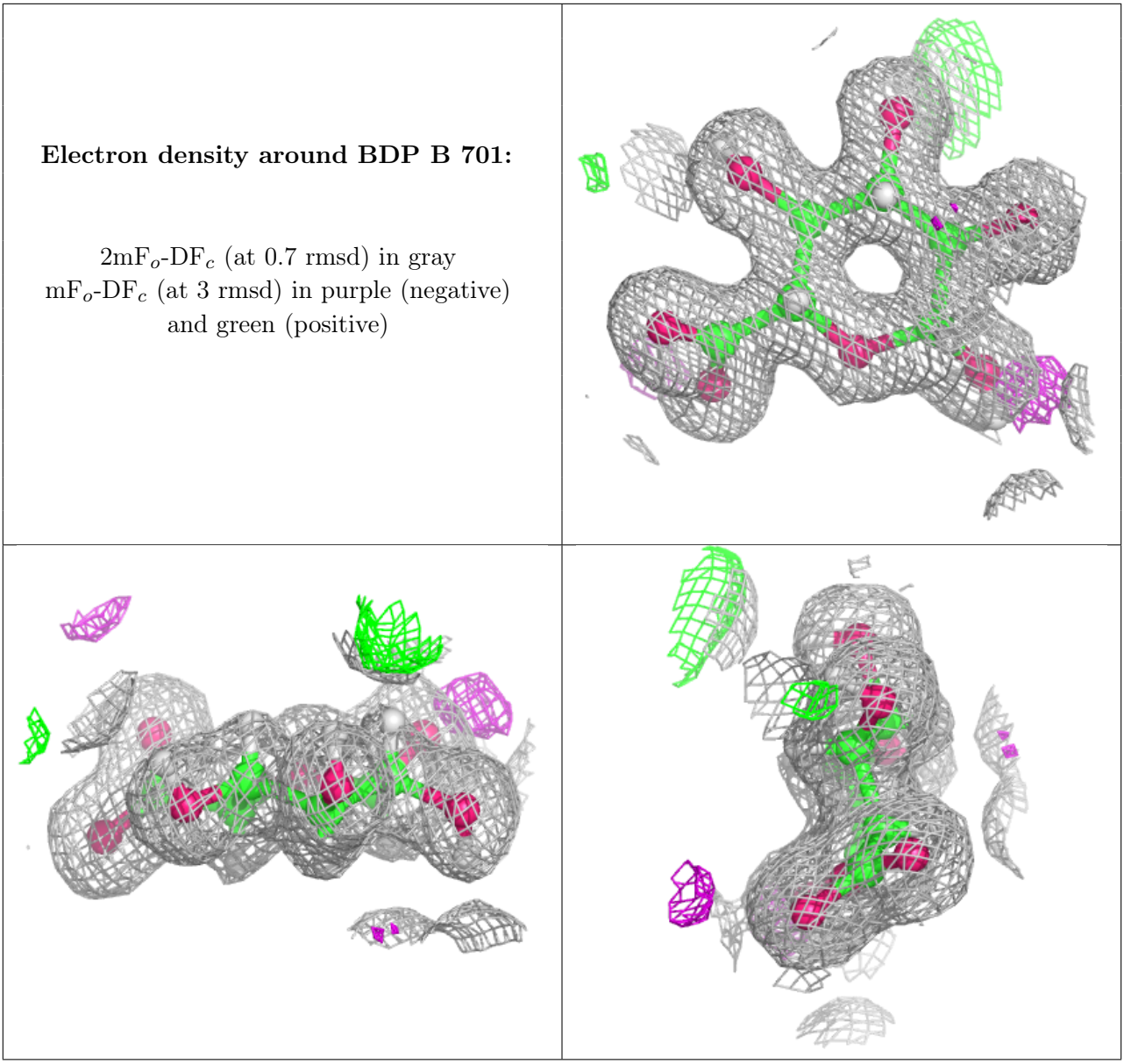

6.5 Other polymers (i)

There are no such residues in this entry.