Full wwPDB X-ray Structure Validation Report (i)

Jun 18, 2024 – 11:24 PM EDT

PDB ID	:	4J0T
Title	:	CRYSTAL STRUCTURE OF BACE-1 IN COMPLEX WITH 5-Ethoxy-pyridine-2-carboxylic acid [3-((R)-2-amino-5,5-difluoro-4-methyl-5,6-dihydro-4H-[1,3]oxazin-4-yl)-4-fluoro-phenyl]-amide
Authors	:	Kuglstatter, A.; Stihle, M.
Deposited on	:	2013-01-31
Resolution	:	2.05 Å(reported)

This is a Full wwPDB X-ray Structure Validation Report for a publicly released PDB entry.

We welcome your comments at *validation@mail.wwpdb.org*
A user guide is available at
https://www.wwpdb.org/validation/2017/XrayValidationReportHelp
with specific help available everywhere you see the (i) symbol.

The types of validation reports are described at
http://www.wwpdb.org/validation/2017/FAQs#types.

The following versions of software and data (see references (1)) were used in the production of this report:

MolProbity	:	4.02b-467
Mogul	:	2022.3.0, CSD as543be (2022)
Xtriage (Phenix)	:	1.20.1
EDS	:	2.37.1
buster-report	:	1.1.7 (2018)
Percentile statistics	:	20191225.v01 (using entries in the PDB archive December 25th 2019)
Refmac	:	5.8.0158
CCP4	:	7.0.044 (Gargrove)
Ideal geometry (proteins)	:	Engh & Huber (2001)
Ideal geometry (DNA, RNA)	:	Parkinson et al. (1996)
Validation Pipeline (wwPDB-VP)	:	2.37.1

1 Overall quality at a glance (i)

The following experimental techniques were used to determine the structure:
X-RAY DIFFRACTION

The reported resolution of this entry is 2.05 Å.

Percentile scores (ranging between 0-100) for global validation metrics of the entry are shown in the following graphic. The table shows the number of entries on which the scores are based.

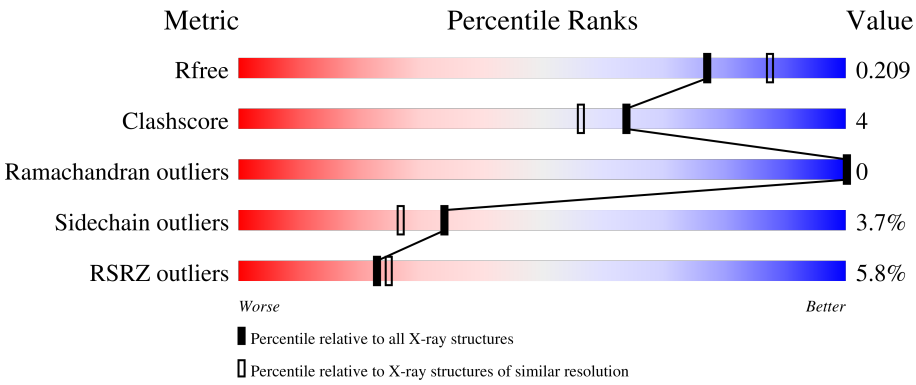

Metric	Whole archive (#Entries)	Similar resolution (#Entries, resolution range(Å))
R_{free}	130704	1692 (2.04-2.04)
Clashscore	141614	1773 (2.04-2.04)
Ramachandran outliers	138981	1752 (2.04-2.04)
Sidechain outliers	138945	1752 (2.04-2.04)
RSRZ outliers	127900	1672 (2.04-2.04)

The table below summarises the geometric issues observed across the polymeric chains and their fit to the electron density. The red, orange, yellow and green segments of the lower bar indicate the fraction of residues that contain outliers for >=3, 2, 1 and 0 types of geometric quality criteria respectively. A grey segment represents the fraction of residues that are not modelled. The numeric value for each fraction is indicated below the corresponding segment, with a dot representing fractions <=5% The upper red bar (where present) indicates the fraction of residues that have poor fit to the electron density. The numeric value is given above the bar.

Mol	Chain	Length	Quality of chain
1	A	409	5% 81% 11% • 7%

2 Entry composition (i)

There are 5 unique types of molecules in this entry. The entry contains 3288 atoms, of which 0 are hydrogens and 0 are deuteriums.

In the tables below, the ZeroOcc column contains the number of atoms modelled with zero occupancy, the AltConf column contains the number of residues with at least one atom in alternate conformation and the Trace column contains the number of residues modelled with at most 2 atoms.

- Molecule 1 is a protein called Beta-secretase 1.

Mol	Chain	Residues	Atoms					ZeroOcc	AltConf	Trace
			Total	C	N	O	S			
1	A	381	2997	1917	499	567	14	0	2	0

There is a discrepancy between the modelled and reference sequences:

Chain	Residue	Modelled	Actual	Comment	Reference
A	307	ALA	LYS	ENGINEERED MUTATION	UNP P56817

- Molecule 2 is SODIUM ION (three-letter code: NA) (formula: Na).

Mol	Chain	Residues	Atoms		ZeroOcc	AltConf
			Total	Na		
2	A	2	2	2	0	0

- Molecule 3 is DIMETHYL SULFOXIDE (three-letter code: DMS) (formula: C_2H_6OS).

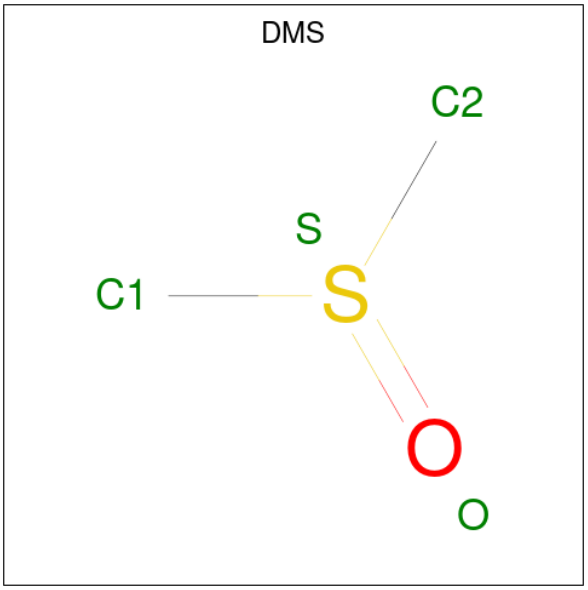

Mol	Chain	Residues	Atoms				ZeroOcc	AltConf
			Total	C	O	S		
3	A	1	4	2	1	1	0	0

- Molecule 4 is 5-Ethoxy-pyridine-2-carboxylic acid [3-((R)-2-amino-5,5-difluoro-4-methyl-5,6-dihydro-4H-[1,3]oxazin-4-yl)-4-fluoro-phenyl]-amide (three-letter code: 6T9) (formula: $C_{19}H_{19}F_3N_4O_3$).

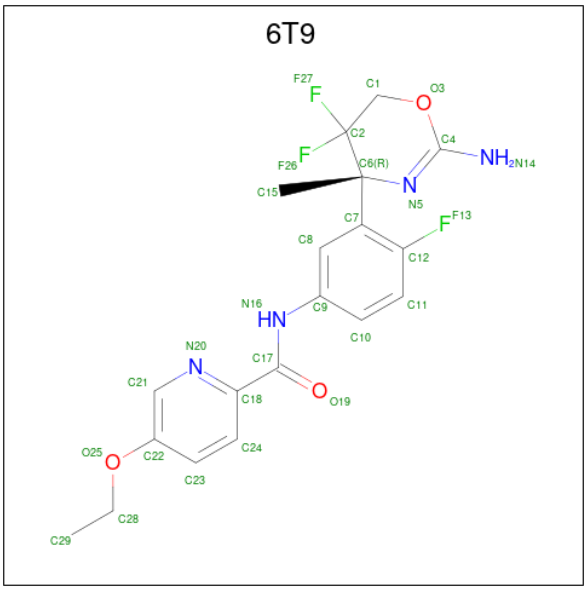

Mol	Chain	Residues	Atoms					ZeroOcc	AltConf
			Total	C	F	N	O		
4	A	1	29	19	3	4	3	0	0

- Molecule 5 is water.

Mol	Chain	Residues	Atoms		ZeroOcc	AltConf
			Total	O		
5	A	256	256	256	0	0

3 Residue-property plots (i)

These plots are drawn for all protein, RNA, DNA and oligosaccharide chains in the entry. The first graphic for a chain summarises the proportions of the various outlier classes displayed in the second graphic. The second graphic shows the sequence view annotated by issues in geometry and electron density. Residues are color-coded according to the number of geometric quality criteria for which they contain at least one outlier: green = 0, yellow = 1, orange = 2 and red = 3 or more. A red dot above a residue indicates a poor fit to the electron density (RSRZ > 2). Stretches of 2 or more consecutive residues without any outlier are shown as a green connector. Residues present in the sample, but not in the model, are shown in grey.

- Molecule 1: Beta-secretase 1

Chain A:

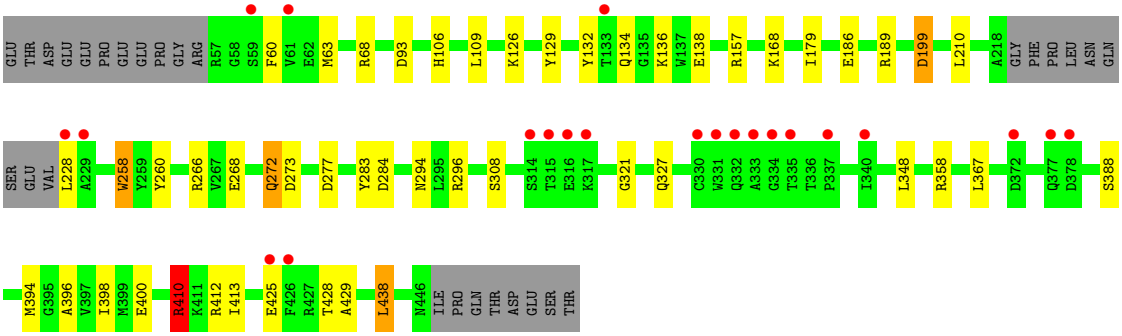

4 Data and refinement statistics (i)

Property	Value	Source
Space group	P 61 2 2	Depositor
Cell constants a, b, c, α, β, γ	102.22Å 102.22Å 170.66Å 90.00° 90.00° 120.00°	Depositor
Resolution (Å)	47.86 – 2.05 47.86 – 2.05	Depositor EDS
% Data completeness (in resolution range)	100.0 (47.86-2.05) 100.0 (47.86-2.05)	Depositor EDS
R_{merge}	(Not available)	Depositor
R_{sym}	0.15	Depositor
$< I/\sigma(I) >$ [1]	1.20 (at 2.05Å)	Xtriage
Refinement program	REFMAC	Depositor
R, R_{free}	0.165 , 0.210 0.164 , 0.209	Depositor DCC
R_{free} test set	1708 reflections (5.06%)	wwPDB-VP
Wilson B-factor (Å^2)	35.8	Xtriage
Anisotropy	0.002	Xtriage
Bulk solvent k_{sol}(e/Å^3), B_{sol}(Å^2)	0.36 , 44.4	EDS
L-test for twinning[2]	$< \|L\| > = 0.48$, $< L^2 > = 0.31$	Xtriage
Estimated twinning fraction	No twinning to report.	Xtriage
F_o,F_c correlation	0.97	EDS
Total number of atoms	3288	wwPDB-VP
Average B, all atoms (Å^2)	38.0	wwPDB-VP

Xtriage's analysis on translational NCS is as follows: *The largest off-origin peak in the Patterson function is 3.58% of the height of the origin peak. No significant pseudotranslation is detected.*

[1]Intensities estimated from amplitudes.

[2]Theoretical values of $< |L| >$, $< L^2 >$ for acentric reflections are 0.5, 0.333 respectively for untwinned datasets, and 0.375, 0.2 for perfectly twinned datasets.

5 Model quality (i)

5.1 Standard geometry (i)

Bond lengths and bond angles in the following residue types are not validated in this section: NA, 6T9, DMS

The Z score for a bond length (or angle) is the number of standard deviations the observed value is removed from the expected value. A bond length (or angle) with $|Z| > 5$ is considered an outlier worth inspection. RMSZ is the root-mean-square of all Z scores of the bond lengths (or angles).

Mol	Chain	Bond lengths		Bond angles	
		RMSZ	$\#\|Z\|>5$	RMSZ	$\#\|Z\|>5$
1	A	1.03	1/3078 (0.0%)	1.05	13/4184 (0.3%)

Chiral center outliers are detected by calculating the chiral volume of a chiral center and verifying if the center is modelled as a planar moiety or with the opposite hand.A planarity outlier is detected by checking planarity of atoms in a peptide group, atoms in a mainchain group or atoms of a sidechain that are expected to be planar.

Mol	Chain	#Chirality outliers	#Planarity outliers
1	A	0	2

All (1) bond length outliers are listed below:

Mol	Chain	Res	Type	Atoms	Z	Observed(Å)	Ideal(Å)
1	A	308	SER	CB-OG	-6.85	1.33	1.42

All (13) bond angle outliers are listed below:

Mol	Chain	Res	Type	Atoms	Z	Observed(^{o})	Ideal(^{o})
1	A	410	ARG	NE-CZ-NH2	-6.76	116.92	120.30
1	A	132	TYR	CB-CG-CD1	-6.68	116.99	121.00
1	A	210	LEU	CB-CG-CD2	-6.66	99.67	111.00
1	A	438	LEU	CB-CG-CD1	6.59	122.20	111.00
1	A	277	ASP	CB-CG-OD1	6.57	124.22	118.30
1	A	157	ARG	NE-CZ-NH2	-5.94	117.33	120.30
1	A	412	ARG	NE-CZ-NH2	-5.86	117.37	120.30
1	A	157	ARG	NE-CZ-NH1	5.63	123.11	120.30
1	A	410	ARG	NE-CZ-NH1	5.50	123.05	120.30
1	A	273	ASP	CB-CG-OD1	5.35	123.12	118.30
1	A	348	LEU	CB-CG-CD2	-5.29	102.01	111.00
1	A	358	ARG	NE-CZ-NH2	-5.28	117.66	120.30

Continued on next page...

Continued from previous page...

Mol	Chain	Res	Type	Atoms	Z	Observed(°)	Ideal(°)
1	A	199	ASP	CB-CG-OD2	5.11	122.90	118.30

There are no chirality outliers.

All (2) planarity outliers are listed below:

Mol	Chain	Res	Type	Group
1	A	258	TRP	Peptide
1	A	294	ASN	Peptide

5.2 Too-close contacts (i)

In the following table, the Non-H and H(model) columns list the number of non-hydrogen atoms and hydrogen atoms in the chain respectively. The H(added) column lists the number of hydrogen atoms added and optimized by MolProbity. The Clashes column lists the number of clashes within the asymmetric unit, whereas Symm-Clashes lists symmetry-related clashes.

Mol	Chain	Non-H	H(model)	H(added)	Clashes	Symm-Clashes
1	A	2997	0	2911	22	0
2	A	2	0	0	0	0
3	A	4	0	6	0	0
4	A	29	0	19	3	0
5	A	256	0	0	3	3
All	All	3288	0	2936	25	3

The all-atom clashscore is defined as the number of clashes found per 1000 atoms (including hydrogen atoms). The all-atom clashscore for this structure is 4.

All (25) close contacts within the same asymmetric unit are listed below, sorted by their clash magnitude.

Atom-1	Atom-2	Interatomic distance (Å)	Clash overlap (Å)
1:A:410:ARG:HH11	1:A:410:ARG:HG3	1.38	0.86
1:A:410:ARG:NH2	5:A:686:HOH:O	2.21	0.72
1:A:428[B]:THR:HG22	1:A:429:ALA:O	1.89	0.72
1:A:168:LYS:NZ	5:A:815:HOH:O	2.22	0.64
1:A:410:ARG:HG3	1:A:410:ARG:NH1	2.08	0.64
1:A:394:MET:CE	1:A:398:ILE:HG21	2.32	0.59
4:A:504:6T9:O19	4:A:504:6T9:H10	2.04	0.56
1:A:396:ALA:O	1:A:400:GLU:HG3	2.05	0.56
1:A:296:ARG:HD2	5:A:794:HOH:O	2.09	0.52

Continued on next page...

Continued from previous page...

Atom-1	Atom-2	Interatomic distance (Å)	Clash overlap (Å)
1:A:260:TYR:HB3	1:A:413:ILE:HD11	1.91	0.52
1:A:394:MET:HE2	1:A:398:ILE:HG21	1.94	0.50
1:A:186:GLU:O	1:A:186:GLU:HG3	2.12	0.49
1:A:272:GLN:HA	1:A:272:GLN:HE21	1.81	0.45
4:A:504:6T9:H152	4:A:504:6T9:F13	2.06	0.45
1:A:60:PHE:CD2	1:A:63:MET:HE3	2.53	0.44
1:A:93:ASP:OD2	1:A:179:ILE:HD11	2.18	0.44
1:A:394:MET:HE3	1:A:398:ILE:HG21	1.99	0.43
1:A:266:ARG:NH2	1:A:268:GLU:OE2	2.45	0.43
1:A:296:ARG:HB3	1:A:388:SER:HB2	2.00	0.43
1:A:321:GLY:HA3	1:A:327:GLN:HE21	1.84	0.43
4:A:504:6T9:O19	4:A:504:6T9:C10	2.65	0.43
1:A:129:TYR:CD1	1:A:138:GLU:HG3	2.54	0.42
1:A:68:ARG:HD3	1:A:68:ARG:HA	1.87	0.41
1:A:283:TYR:HA	1:A:284:ASP:HA	1.84	0.41
1:A:106:HIS:HB3	1:A:109:LEU:HG	2.04	0.40

All (3) symmetry-related close contacts are listed below. The label for Atom-2 includes the symmetry operator and encoded unit-cell translations to be applied.

Atom-1	Atom-2	Interatomic distance (Å)	Clash overlap (Å)
5:A:796:HOH:O	5:A:796:HOH:O[10_444]	1.71	0.49
5:A:702:HOH:O	5:A:741:HOH:O[8_545]	2.00	0.20
5:A:685:HOH:O	5:A:715:HOH:O[6_555]	2.16	0.04

5.3 Torsion angles (i)

5.3.1 Protein backbone (i)

In the following table, the Percentiles column shows the percent Ramachandran outliers of the chain as a percentile score with respect to all X-ray entries followed by that with respect to entries of similar resolution.

The Analysed column shows the number of residues for which the backbone conformation was analysed, and the total number of residues.

Mol	Chain	Analysed	Favoured	Allowed	Outliers	Percentiles
1	A	379/409 (93%)	368 (97%)	11 (3%)	0	100 100

There are no Ramachandran outliers to report.

5.3.2 Protein sidechains (i)

In the following table, the Percentiles column shows the percent sidechain outliers of the chain as a percentile score with respect to all X-ray entries followed by that with respect to entries of similar resolution.

The Analysed column shows the number of residues for which the sidechain conformation was analysed, and the total number of residues.

Mol	Chain	Analysed	Rotameric	Outliers	Percentiles
1	A	325/349 (93%)	313 (96%)	12 (4%)	34 27

All (12) residues with a non-rotameric sidechain are listed below:

Mol	Chain	Res	Type
1	A	126	LYS
1	A	134	GLN
1	A	136	LYS
1	A	189	ARG
1	A	199	ASP
1	A	228	LEU
1	A	258	TRP
1	A	272	GLN
1	A	367	LEU
1	A	410	ARG
1	A	425	GLU
1	A	438	LEU

Sometimes sidechains can be flipped to improve hydrogen bonding and reduce clashes. All (3) such sidechains are listed below:

Mol	Chain	Res	Type
1	A	153	ASN
1	A	272	GLN
1	A	327	GLN

5.3.3 RNA (i)

There are no RNA molecules in this entry.

5.4 Non-standard residues in protein, DNA, RNA chains (i)

There are no non-standard protein/DNA/RNA residues in this entry.

5.5 Carbohydrates (i)

There are no monosaccharides in this entry.

5.6 Ligand geometry (i)

Of 4 ligands modelled in this entry, 2 are monoatomic - leaving 2 for Mogul analysis.

In the following table, the Counts columns list the number of bonds (or angles) for which Mogul statistics could be retrieved, the number of bonds (or angles) that are observed in the model and the number of bonds (or angles) that are defined in the Chemical Component Dictionary. The Link column lists molecule types, if any, to which the group is linked. The Z score for a bond length (or angle) is the number of standard deviations the observed value is removed from the expected value. A bond length (or angle) with $|Z| > 2$ is considered an outlier worth inspection. RMSZ is the root-mean-square of all Z scores of the bond lengths (or angles).

Mol	Type	Chain	Res	Link	Bond lengths			Bond angles		
					Counts	RMSZ	$\#\|Z\| > 2$	Counts	RMSZ	$\#\|Z\| > 2$
3	DMS	A	503	-	3,3,3	0.48	0	3,3,3	0.65	0
4	6T9	A	504	-	27,31,31	1.20	1 (3%)	36,46,46	1.74	7 (19%)

In the following table, the Chirals column lists the number of chiral outliers, the number of chiral centers analysed, the number of these observed in the model and the number defined in the Chemical Component Dictionary. Similar counts are reported in the Torsion and Rings columns. '-' means no outliers of that kind were identified.

Mol	Type	Chain	Res	Link	Chirals	Torsions	Rings
4	6T9	A	504	-	-	1/16/37/37	0/3/3/3

All (1) bond length outliers are listed below:

Mol	Chain	Res	Type	Atoms	Z	Observed(Å)	Ideal(Å)
4	A	504	6T9	C7-C12	3.15	1.43	1.39

All (7) bond angle outliers are listed below:

Mol	Chain	Res	Type	Atoms	Z	Observed(^{o})	Ideal(^{o})
4	A	504	6T9	C24-C18-C17	4.43	126.76	119.57
4	A	504	6T9	C21-N20-C18	4.27	124.15	117.46
4	A	504	6T9	C17-C18-N20	-3.84	112.93	117.42
4	A	504	6T9	O3-C4-N14	3.15	116.37	111.61
4	A	504	6T9	C28-O25-C22	-2.61	111.81	117.90
4	A	504	6T9	O19-C17-C18	2.33	126.22	121.08
4	A	504	6T9	C15-C6-N5	-2.24	106.59	108.81

There are no chirality outliers.

All (1) torsion outliers are listed below:

Mol	Chain	Res	Type	Atoms
4	A	504	6T9	C15-C6-C7-C12

There are no ring outliers.

1 monomer is involved in 3 short contacts:

Mol	Chain	Res	Type	Clashes	Symm-Clashes
4	A	504	6T9	3	0

The following is a two-dimensional graphical depiction of Mogul quality analysis of bond lengths, bond angles, torsion angles, and ring geometry for all instances of the Ligand of Interest. In addition, ligands with molecular weight > 250 and outliers as shown on the validation Tables will also be included. For torsion angles, if less then 5% of the Mogul distribution of torsion angles is within 10 degrees of the torsion angle in question, then that torsion angle is considered an outlier. Any bond that is central to one or more torsion angles identified as an outlier by Mogul will be highlighted in the graph. For rings, the root-mean-square deviation (RMSD) between the ring in question and similar rings identified by Mogul is calculated over all ring torsion angles. If the average RMSD is greater than 60 degrees and the minimal RMSD between the ring in question and any Mogul-identified rings is also greater than 60 degrees, then that ring is considered an outlier. The outliers are highlighted in purple. The color gray indicates Mogul did not find sufficient equivalents in the CSD to analyse the geometry.

Ligand 6T9 A 504

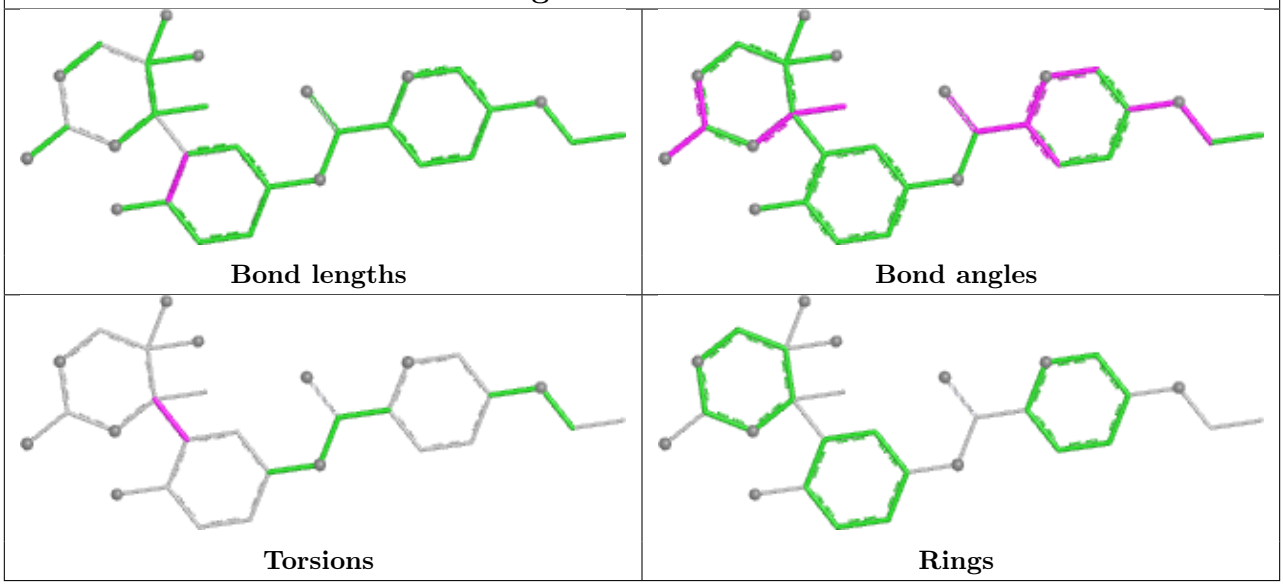

5.7 Other polymers (i)

There are no such residues in this entry.

5.8 Polymer linkage issues (i)

There are no chain breaks in this entry.

6 Fit of model and data (i)

6.1 Protein, DNA and RNA chains (i)

In the following table, the column labelled '#RSRZ> 2' contains the number (and percentage) of RSRZ outliers, followed by percent RSRZ outliers for the chain as percentile scores relative to all X-ray entries and entries of similar resolution. The OWAB column contains the minimum, median, 95th percentile and maximum values of the occupancy-weighted average B-factor per residue. The column labelled 'Q< 0.9' lists the number of (and percentage) of residues with an average occupancy less than 0.9.

Mol	Chain	Analysed	<RSRZ>	#RSRZ>2	OWAB(Å^2)	Q<0.9
1	A	381/409 (93%)	-0.02	22 (5%) 23 25	20, 33, 71, 114	0

All (22) RSRZ outliers are listed below:

Mol	Chain	Res	Type	RSRZ
1	A	315	THR	5.2
1	A	335	THR	4.9
1	A	332	GLN	4.6
1	A	228	LEU	4.1
1	A	334	GLY	4.0
1	A	316	GLU	3.7
1	A	61	VAL	3.4
1	A	337	PRO	3.4
1	A	377	GLN	3.3
1	A	331	TRP	3.3
1	A	317	LYS	3.1
1	A	340	ILE	3.1
1	A	59	SER	3.0
1	A	314	SER	3.0
1	A	425	GLU	2.9
1	A	378	ASP	2.7
1	A	426	PHE	2.7
1	A	372	ASP	2.5
1	A	333	ALA	2.4
1	A	133	THR	2.2
1	A	229	ALA	2.2
1	A	330	CYS	2.0

6.2 Non-standard residues in protein, DNA, RNA chains (i)

There are no non-standard protein/DNA/RNA residues in this entry.

6.3 Carbohydrates (i)

There are no monosaccharides in this entry.

6.4 Ligands (i)

In the following table, the Atoms column lists the number of modelled atoms in the group and the number defined in the chemical component dictionary. The B-factors column lists the minimum, median, 95th percentile and maximum values of B factors of atoms in the group. The column labelled 'Q< 0.9' lists the number of atoms with occupancy less than 0.9.

Mol	Type	Chain	Res	Atoms	RSCC	RSR	B-factors(Å^2)	Q<0.9
2	NA	A	502	1/1	0.87	0.23	69,69,69,69	0
2	NA	A	501	1/1	0.96	0.08	38,38,38,38	0
3	DMS	A	503	4/4	0.97	0.13	64,65,65,66	0
4	6T9	A	504	29/29	0.98	0.15	22,29,33,35	0

The following is a graphical depiction of the model fit to experimental electron density of all instances of the Ligand of Interest. In addition, ligands with molecular weight > 250 and outliers as shown on the geometry validation Tables will also be included. Each fit is shown from different orientation to approximate a three-dimensional view.

Electron density around 6T9 A 504:

2mF$_o$-DF$_c$ (at 0.7 rmsd) in gray
mF$_o$-DF$_c$ (at 3 rmsd) in purple (negative) and green (positive)

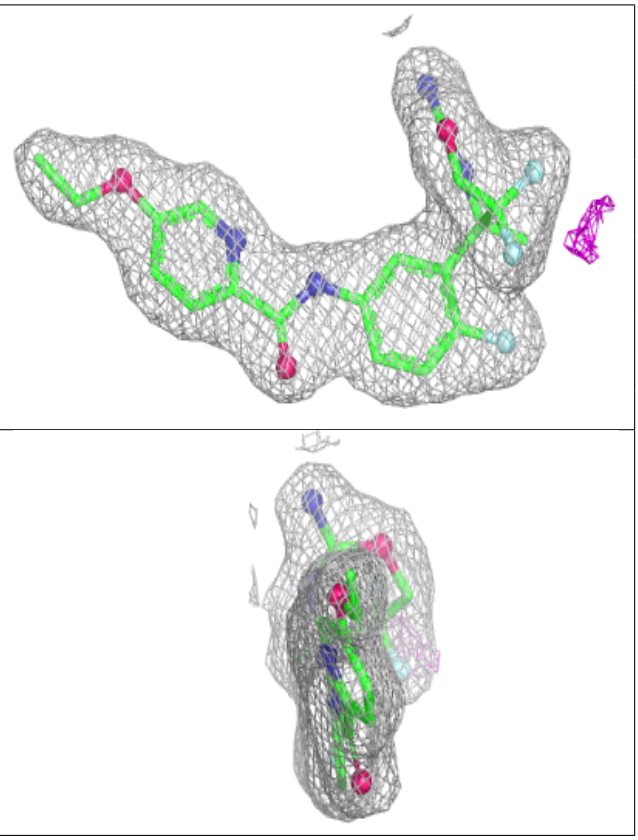

6.5 Other polymers (i)

There are no such residues in this entry.