wwPDB X-ray Structure Validation Summary Report (i)

Aug 20, 2023 – 08:42 AM EDT

PDB ID	:	2I87
Title	:	Allosteric inhibition of Staphylococcus aureus D-alanine:D-alanine ligase revealed by crystallographic studies
Authors	:	Liu, S.; Chang, J.S.; Herberg, J.T.; Horng, M.; Tomich, P.K.; Lin, A.H.; Marotti, K.R.
Deposited on	:	2006-09-01
Resolution	:	2.00 Å(reported)

This is a wwPDB X-ray Structure Validation Summary Report for a publicly released PDB entry.

We welcome your comments at *validation@mail.wwpdb.org*
A user guide is available at
https://www.wwpdb.org/validation/2017/XrayValidationReportHelp
with specific help available everywhere you see the (i) symbol.

The types of validation reports are described at
http://www.wwpdb.org/validation/2017/FAQs#types.

The following versions of software and data (see references (1)) were used in the production of this report:

MolProbity	:	4.02b-467
Mogul	:	1.8.5 (274361), CSD as541be (2020)
Xtriage (Phenix)	:	1.13
EDS	:	2.35
Percentile statistics	:	20191225.v01 (using entries in the PDB archive December 25th 2019)
Refmac	:	5.8.0158
CCP4	:	7.0.044 (Gargrove)
Ideal geometry (proteins)	:	Engh & Huber (2001)
Ideal geometry (DNA, RNA)	:	Parkinson et al. (1996)
Validation Pipeline (wwPDB-VP)	:	2.35

1 Overall quality at a glance (i)

The following experimental techniques were used to determine the structure:
X-RAY DIFFRACTION

The reported resolution of this entry is 2.00 Å.

Percentile scores (ranging between 0-100) for global validation metrics of the entry are shown in the following graphic. The table shows the number of entries on which the scores are based.

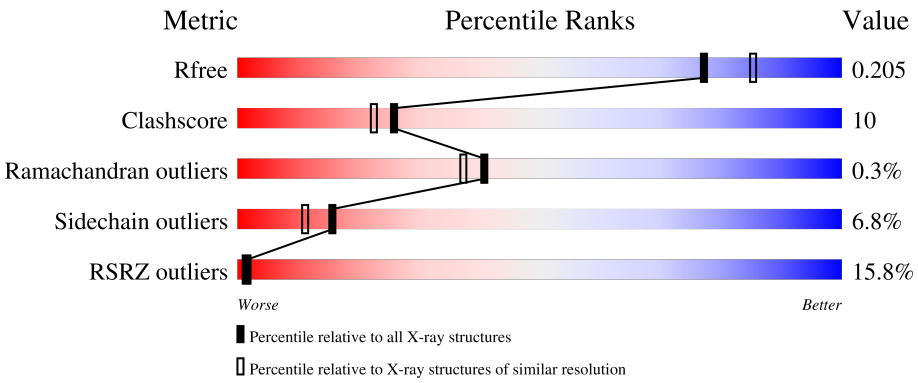

Metric	Whole archive (#Entries)	Similar resolution (#Entries, resolution range(Å))
R_{free}	130704	8085 (2.00-2.00)
Clashscore	141614	9178 (2.00-2.00)
Ramachandran outliers	138981	9054 (2.00-2.00)
Sidechain outliers	138945	9053 (2.00-2.00)
RSRZ outliers	127900	7900 (2.00-2.00)

The table below summarises the geometric issues observed across the polymeric chains and their fit to the electron density. The red, orange, yellow and green segments of the lower bar indicate the fraction of residues that contain outliers for >=3, 2, 1 and 0 types of geometric quality criteria respectively. A grey segment represents the fraction of residues that are not modelled. The numeric value for each fraction is indicated below the corresponding segment, with a dot representing fractions <=5% The upper red bar (where present) indicates the fraction of residues that have poor fit to the electron density. The numeric value is given above the bar.

Mol	Chain	Length	Quality of chain
1	A	364	13% 75% 15% 5% 5%
1	B	364	17% 70% 21% • 5%

2 Entry composition (i)

There are 3 unique types of molecules in this entry. The entry contains 5580 atoms, of which 0 are hydrogens and 0 are deuteriums.

In the tables below, the ZeroOcc column contains the number of atoms modelled with zero occupancy, the AltConf column contains the number of residues with at least one atom in alternate conformation and the Trace column contains the number of residues modelled with at most 2 atoms.

- Molecule 1 is a protein called D-alanine-D-alanine ligase.

Mol	Chain	Residues	Atoms					ZeroOcc	AltConf	Trace
			Total	C	N	O	S			
1	A	345	2738	1741	453	535	9	0	0	0
1	B	344	2741	1744	455	533	9	0	0	0

There are 16 discrepancies between the modelled and reference sequences:

Chain	Residue	Modelled	Actual	Comment	Reference
A	357	ARG	-	cloning artifact	UNP Q5HEB7
A	358	SER	-	cloning artifact	UNP Q5HEB7
A	359	HIS	-	expression tag	UNP Q5HEB7
A	360	HIS	-	expression tag	UNP Q5HEB7
A	361	HIS	-	expression tag	UNP Q5HEB7
A	362	HIS	-	expression tag	UNP Q5HEB7
A	363	HIS	-	expression tag	UNP Q5HEB7
A	364	HIS	-	expression tag	UNP Q5HEB7
B	357	ARG	-	cloning artifact	UNP Q5HEB7
B	358	SER	-	cloning artifact	UNP Q5HEB7
B	359	HIS	-	expression tag	UNP Q5HEB7
B	360	HIS	-	expression tag	UNP Q5HEB7
B	361	HIS	-	expression tag	UNP Q5HEB7
B	362	HIS	-	expression tag	UNP Q5HEB7
B	363	HIS	-	expression tag	UNP Q5HEB7
B	364	HIS	-	expression tag	UNP Q5HEB7

- Molecule 2 is SULFATE ION (three-letter code: SO4) (formula: O_4S).

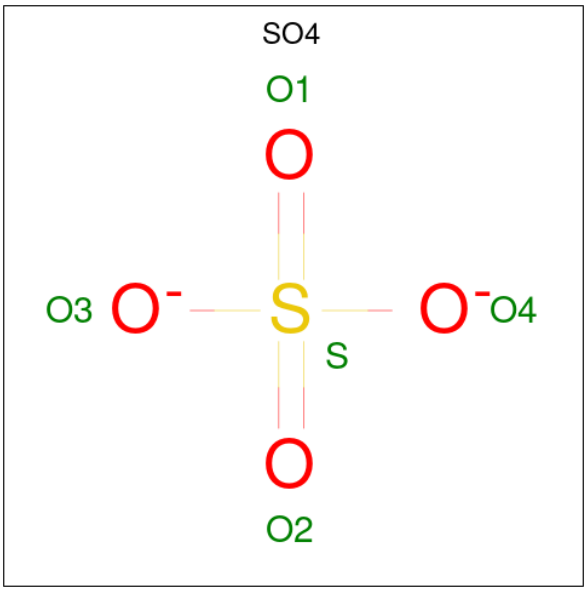

Mol	Chain	Residues	Atoms	ZeroOcc	AltConf
2	A	1	Total O S 5 4 1	0	0
2	B	1	Total O S 5 4 1	0	0

- Molecule 3 is water.

Mol	Chain	Residues	Atoms	ZeroOcc	AltConf
3	A	42	Total O 42 42	0	0
3	B	49	Total O 49 49	0	0

3 Residue-property plots (i)

These plots are drawn for all protein, RNA, DNA and oligosaccharide chains in the entry. The first graphic for a chain summarises the proportions of the various outlier classes displayed in the second graphic. The second graphic shows the sequence view annotated by issues in geometry and electron density. Residues are color-coded according to the number of geometric quality criteria for which they contain at least one outlier: green = 0, yellow = 1, orange = 2 and red = 3 or more. A red dot above a residue indicates a poor fit to the electron density (RSRZ > 2). Stretches of 2 or more consecutive residues without any outlier are shown as a green connector. Residues present in the sample, but not in the model, are shown in grey.

• Molecule 1: D-alanine-D-alanine ligase

Chain A:

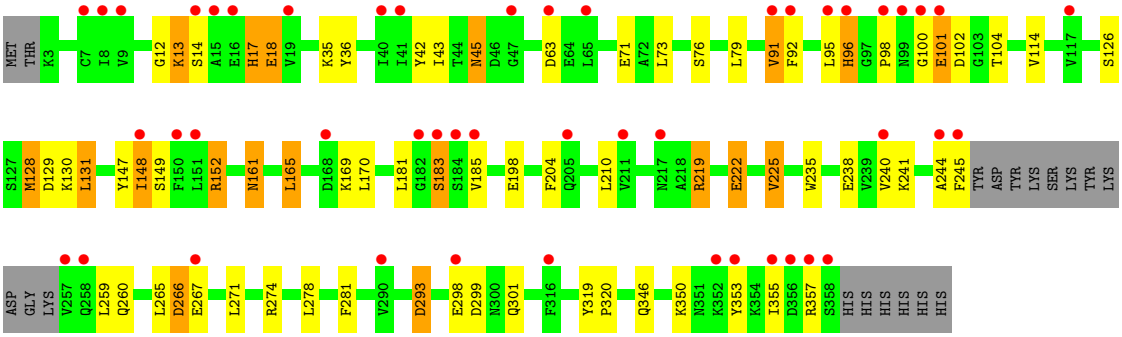

• Molecule 1: D-alanine-D-alanine ligase

Chain B:

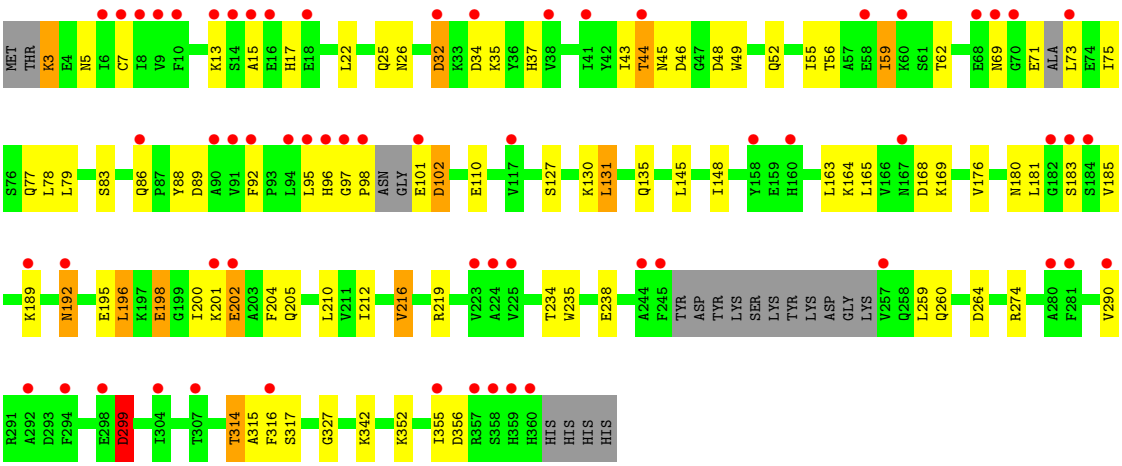

4 Data and refinement statistics (i)

Property	Value	Source
Space group	P 1 21 1	Depositor
Cell constants a, b, c, α, β, γ	67.66Å 66.41Å 78.59Å 90.00° 96.24° 90.00°	Depositor
Resolution (Å)	79.06 – 2.00 24.25 – 2.00	Depositor EDS
% Data completeness (in resolution range)	99.6 (79.06-2.00) 99.7 (24.25-2.00)	Depositor EDS
R_{merge}	(Not available)	Depositor
R_{sym}	0.04	Depositor
$< I/\sigma(I) >$ [1]	5.72 (at 1.99Å)	Xtriage
Refinement program	REFMAC 5.3.0008	Depositor
R, R_{free}	0.200 , 0.241 0.212 , 0.205	Depositor DCC
R_{free} test set	2370 reflections (5.06%)	wwPDB-VP
Wilson B-factor (Å^2)	30.6	Xtriage
Anisotropy	0.054	Xtriage
Bulk solvent k_{sol}(e/Å^3), B_{sol}(Å^2)	0.39 , 59.7	EDS
L-test for twinning[2]	$< \|L\| > = 0.49$, $< L^2 > = 0.32$	Xtriage
Estimated twinning fraction	No twinning to report.	Xtriage
F_o,F_c correlation	0.93	EDS
Total number of atoms	5580	wwPDB-VP
Average B, all atoms (Å^2)	45.0	wwPDB-VP

Xtriage's analysis on translational NCS is as follows: *The largest off-origin peak in the Patterson function is 5.30% of the height of the origin peak. No significant pseudotranslation is detected.*

[1] Intensities estimated from amplitudes.

[2] Theoretical values of $< |L| >$, $< L^2 >$ for acentric reflections are 0.5, 0.333 respectively for untwinned datasets, and 0.375, 0.2 for perfectly twinned datasets.

5 Model quality (i)

5.1 Standard geometry (i)

Bond lengths and bond angles in the following residue types are not validated in this section: SO4

The Z score for a bond length (or angle) is the number of standard deviations the observed value is removed from the expected value. A bond length (or angle) with $|Z| > 5$ is considered an outlier worth inspection. RMSZ is the root-mean-square of all Z scores of the bond lengths (or angles).

Mol	Chain	Bond lengths		Bond angles	
		RMSZ	$\#\|Z\|>5$	RMSZ	$\#\|Z\|>5$
1	A	1.18	7/2790 (0.3%)	1.02	9/3775 (0.2%)
1	B	1.10	2/2793 (0.1%)	0.99	4/3776 (0.1%)
All	All	1.14	9/5583 (0.2%)	1.01	13/7551 (0.2%)

Chiral center outliers are detected by calculating the chiral volume of a chiral center and verifying if the center is modelled as a planar moiety or with the opposite hand.A planarity outlier is detected by checking planarity of atoms in a peptide group, atoms in a mainchain group or atoms of a sidechain that are expected to be planar.

Mol	Chain	#Chirality outliers	#Planarity outliers
1	B	0	2

The worst 5 of 9 bond length outliers are listed below:

Mol	Chain	Res	Type	Atoms	Z	Observed(Å)	Ideal(Å)
1	A	222	GLU	CG-CD	-12.21	1.33	1.51
1	A	101	GLU	CD-OE1	7.06	1.33	1.25
1	A	101	GLU	CB-CG	7.04	1.65	1.52
1	B	192	ASN	CG-ND2	6.75	1.49	1.32
1	A	18	GLU	CB-CG	6.30	1.64	1.52

The worst 5 of 13 bond angle outliers are listed below:

Mol	Chain	Res	Type	Atoms	Z	Observed(^{o})	Ideal(^{o})
1	A	152	ARG	NE-CZ-NH1	9.57	125.09	120.30
1	A	152	ARG	NE-CZ-NH2	-6.67	116.97	120.30
1	B	219	ARG	NE-CZ-NH2	-6.32	117.14	120.30
1	A	222	GLU	OE1-CD-OE2	6.13	130.66	123.30
1	A	219	ARG	NE-CZ-NH2	-6.12	117.24	120.30

There are no chirality outliers.

All (2) planarity outliers are listed below:

Mol	Chain	Res	Type	Group
1	B	15	ALA	Peptide
1	B	97	GLY	Peptide

5.2 Too-close contacts (i)

In the following table, the Non-H and H(model) columns list the number of non-hydrogen atoms and hydrogen atoms in the chain respectively. The H(added) column lists the number of hydrogen atoms added and optimized by MolProbity. The Clashes column lists the number of clashes within the asymmetric unit, whereas Symm-Clashes lists symmetry-related clashes.

Mol	Chain	Non-H	H(model)	H(added)	Clashes	Symm-Clashes
1	A	2738	0	2700	59	0
1	B	2741	0	2698	58	1
2	A	5	0	0	0	0
2	B	5	0	0	0	0
3	A	42	0	0	0	0
3	B	49	0	0	0	0
All	All	5580	0	5398	114	1

The all-atom clashscore is defined as the number of clashes found per 1000 atoms (including hydrogen atoms). The all-atom clashscore for this structure is 10.

The worst 5 of 114 close contacts within the same asymmetric unit are listed below, sorted by their clash magnitude.

Atom-1	Atom-2	Interatomic distance (Å)	Clash overlap (Å)
1:B:299:ASP:OD2	1:B:299:ASP:O	2.00	0.77
1:A:161:ASN:HD22	1:A:161:ASN:H	1.33	0.76
1:A:244:ALA:O	1:A:245:PHE:O	2.02	0.76
1:B:44:THR:HG22	1:B:48:ASP:H	1.50	0.75
1:A:165:LEU:HD22	1:A:169:LYS:CG	2.16	0.75

All (1) symmetry-related close contacts are listed below. The label for Atom-2 includes the symmetry operator and encoded unit-cell translations to be applied.

Atom-1	Atom-2	Interatomic distance (Å)	Clash overlap (Å)
1:B:189:LYS:NZ	1:B:327:GLY:O[2_656]	2.08	0.12

5.3 Torsion angles (i)

5.3.1 Protein backbone (i)

In the following table, the Percentiles column shows the percent Ramachandran outliers of the chain as a percentile score with respect to all X-ray entries followed by that with respect to entries of similar resolution.

The Analysed column shows the number of residues for which the backbone conformation was analysed, and the total number of residues.

Mol	Chain	Analysed	Favoured	Allowed	Outliers	Percentiles	
1	A	341/364 (94%)	327 (96%)	13 (4%)	1 (0%)	41	37
1	B	336/364 (92%)	326 (97%)	9 (3%)	1 (0%)	41	37
All	All	677/728 (93%)	653 (96%)	22 (3%)	2 (0%)	41	37

All (2) Ramachandran outliers are listed below:

Mol	Chain	Res	Type
1	A	13	LYS
1	B	75	ILE

5.3.2 Protein sidechains (i)

In the following table, the Percentiles column shows the percent sidechain outliers of the chain as a percentile score with respect to all X-ray entries followed by that with respect to entries of similar resolution.

The Analysed column shows the number of residues for which the sidechain conformation was analysed, and the total number of residues.

Mol	Chain	Analysed	Rotameric	Outliers	Percentiles	
1	A	301/319 (94%)	283 (94%)	18 (6%)	19	14
1	B	302/319 (95%)	279 (92%)	23 (8%)	13	8
All	All	603/638 (94%)	562 (93%)	41 (7%)	16	11

5 of 41 residues with a non-rotameric sidechain are listed below:

Mol	Chain	Res	Type
1	B	102	ASP
1	B	202	GLU
1	B	127	SER
1	B	196	LEU

Continued on next page...

Continued from previous page...

Mol	Chain	Res	Type
1	B	259	LEU

Sometimes sidechains can be flipped to improve hydrogen bonding and reduce clashes. 5 of 7 such sidechains are listed below:

Mol	Chain	Res	Type
1	B	52	GLN
1	B	53	ASN
1	B	260	GLN
1	B	86	GLN
1	B	26	ASN

5.3.3 RNA (i)

There are no RNA molecules in this entry.

5.4 Non-standard residues in protein, DNA, RNA chains (i)

There are no non-standard protein/DNA/RNA residues in this entry.

5.5 Carbohydrates (i)

There are no monosaccharides in this entry.

5.6 Ligand geometry (i)

2 ligands are modelled in this entry.

In the following table, the Counts columns list the number of bonds (or angles) for which Mogul statistics could be retrieved, the number of bonds (or angles) that are observed in the model and the number of bonds (or angles) that are defined in the Chemical Component Dictionary. The Link column lists molecule types, if any, to which the group is linked. The Z score for a bond length (or angle) is the number of standard deviations the observed value is removed from the expected value. A bond length (or angle) with $|Z| > 2$ is considered an outlier worth inspection. RMSZ is the root-mean-square of all Z scores of the bond lengths (or angles).

Mol	Type	Chain	Res	Link	Bond lengths			Bond angles		
					Counts	RMSZ	$\#\|Z\| > 2$	Counts	RMSZ	$\#\|Z\| > 2$
2	SO4	A	401	-	4,4,4	0.41	0	6,6,6	0.84	0
2	SO4	B	402	-	4,4,4	0.60	0	6,6,6	0.56	0

There are no bond length outliers.

There are no bond angle outliers.

There are no chirality outliers.

There are no torsion outliers.

There are no ring outliers.

No monomer is involved in short contacts.

5.7 Other polymers (i)

There are no such residues in this entry.

5.8 Polymer linkage issues (i)

There are no chain breaks in this entry.

6 Fit of model and data (i)

6.1 Protein, DNA and RNA chains (i)

In the following table, the column labelled '#RSRZ> 2' contains the number (and percentage) of RSRZ outliers, followed by percent RSRZ outliers for the chain as percentile scores relative to all X-ray entries and entries of similar resolution. The OWAB column contains the minimum, median, 95th percentile and maximum values of the occupancy-weighted average B-factor per residue. The column labelled 'Q< 0.9' lists the number of (and percentage) of residues with an average occupancy less than 0.9.

Mol	Chain	Analysed	<RSRZ>	#RSRZ>2			OWAB(Å^2)	Q<0.9
1	A	345/364 (94%)	0.91	47 (13%)	3	2	34, 44, 58, 74	0
1	B	344/364 (94%)	1.05	62 (18%)	1	1	31, 44, 59, 70	0
All	All	689/728 (94%)	0.98	109 (15%)	2	1	31, 44, 59, 74	0

The worst 5 of 109 RSRZ outliers are listed below:

Mol	Chain	Res	Type	RSRZ
1	A	100	GLY	13.3
1	A	99	ASN	7.7
1	A	183	SER	6.7
1	B	101	GLU	6.6
1	A	98	PRO	6.0

6.2 Non-standard residues in protein, DNA, RNA chains (i)

There are no non-standard protein/DNA/RNA residues in this entry.

6.3 Carbohydrates (i)

There are no monosaccharides in this entry.

6.4 Ligands (i)

In the following table, the Atoms column lists the number of modelled atoms in the group and the number defined in the chemical component dictionary. The B-factors column lists the minimum, median, 95th percentile and maximum values of B factors of atoms in the group. The column labelled 'Q< 0.9' lists the number of atoms with occupancy less than 0.9.

Mol	Type	Chain	Res	Atoms	RSCC	RSR	B-factors(Å^2)	Q<0.9
2	SO4	A	401	5/5	0.89	0.24	61,72,74,75	0
2	SO4	B	402	5/5	0.92	0.14	63,66,69,70	0

6.5 Other polymers (i)

There are no such residues in this entry.