wwPDB X-ray Structure Validation Summary Report (i)

May 16, 2020 – 10:14 pm BST

PDB ID	:	3I3W
Title	:	Structure of a phosphoglucosamine mutase from Francisella tularensis
Authors	:	Brunzelle, J.S.; Wawrzak, Z.; Skarina, T.; Onopriyenko, O.; Savchenko, A.; Anderson, W.F.; Center for Structural Genomics of Infectious Diseases (CSGID)
Deposited on	:	2009-07-01
Resolution	:	2.30 Å(reported)

This is a wwPDB X-ray Structure Validation Summary Report for a publicly released PDB entry.

We welcome your comments at *validation@mail.wwpdb.org*
A user guide is available at
https://www.wwpdb.org/validation/2017/XrayValidationReportHelp
with specific help available everywhere you see the (i) symbol.

The following versions of software and data (see references (1)) were used in the production of this report:

MolProbity	:	4.02b-467
Mogul	:	1.8.5 (274361), CSD as541be (2020)
Xtriage (Phenix)	:	1.13
EDS	:	2.11
Percentile statistics	:	20191225.v01 (using entries in the PDB archive December 25th 2019)
Refmac	:	5.8.0158
CCP4	:	7.0.044 (Gargrove)
Ideal geometry (proteins)	:	Engh & Huber (2001)
Ideal geometry (DNA, RNA)	:	Parkinson et al. (1996)
Validation Pipeline (wwPDB-VP)	:	2.11

1 Overall quality at a glance (i)

The following experimental techniques were used to determine the structure:
X-RAY DIFFRACTION

The reported resolution of this entry is 2.30 Å.

Percentile scores (ranging between 0-100) for global validation metrics of the entry are shown in the following graphic. The table shows the number of entries on which the scores are based.

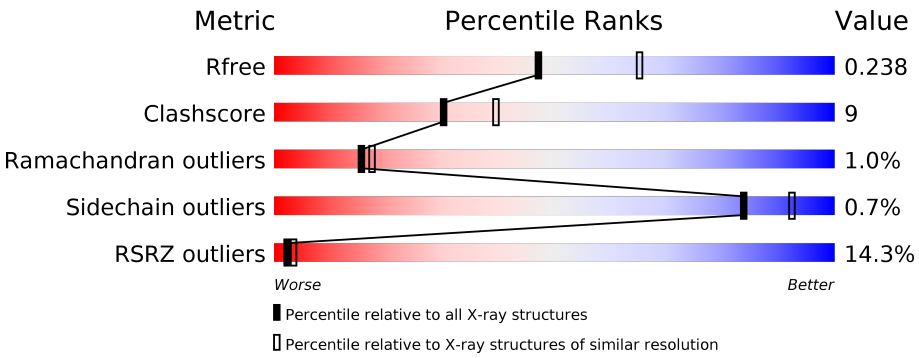

Metric	Whole archive (#Entries)	Similar resolution (#Entries, resolution range(Å))
R_{free}	130704	5042 (2.30-2.30)
Clashscore	141614	5643 (2.30-2.30)
Ramachandran outliers	138981	5575 (2.30-2.30)
Sidechain outliers	138945	5575 (2.30-2.30)
RSRZ outliers	127900	4938 (2.30-2.30)

The table below summarises the geometric issues observed across the polymeric chains and their fit to the electron density. The red, orange, yellow and green segments on the lower bar indicate the fraction of residues that contain outliers for >=3, 2, 1 and 0 types of geometric quality criteria respectively. A grey segment represents the fraction of residues that are not modelled. The numeric value for each fraction is indicated below the corresponding segment, with a dot representing fractions <=5% The upper red bar (where present) indicates the fraction of residues that have poor fit to the electron density. The numeric value is given above the bar.

Mol	Chain	Length	Quality of chain
1	A	443	15% 80% 19%
1	B	443	13% 82% 16% ••

2 Entry composition (i)

There are 3 unique types of molecules in this entry. The entry contains 7026 atoms, of which 0 are hydrogens and 0 are deuteriums.

In the tables below, the ZeroOcc column contains the number of atoms modelled with zero occupancy, the AltConf column contains the number of residues with at least one atom in alternate conformation and the Trace column contains the number of residues modelled with at most 2 atoms.

- Molecule 1 is a protein called Phosphoglucosamine mutase.

Mol	Chain	Residues	Atoms							ZeroOcc	AltConf	Trace
			Total	C	N	O	P	S	Se			
1	A	441	3383	2141	572	659	1	4	6	0	0	0
1	B	440	3376	2136	571	658	1	4	6	0	0	0

- Molecule 2 is ZINC ION (three-letter code: ZN) (formula: Zn).

Mol	Chain	Residues	Atoms		ZeroOcc	AltConf
			Total	Zn		
2	B	1	1	1	0	0
2	A	1	1	1	0	0

- Molecule 3 is water.

Mol	Chain	Residues	Atoms		ZeroOcc	AltConf
			Total	O		
3	A	132	132	132	0	0
3	B	133	133	133	0	0

3 Residue-property plots (i)

These plots are drawn for all protein, RNA and DNA chains in the entry. The first graphic for a chain summarises the proportions of the various outlier classes displayed in the second graphic. The second graphic shows the sequence view annotated by issues in geometry and electron density. Residues are color-coded according to the number of geometric quality criteria for which they contain at least one outlier: green = 0, yellow = 1, orange = 2 and red = 3 or more. A red dot above a residue indicates a poor fit to the electron density (RSRZ > 2). Stretches of 2 or more consecutive residues without any outlier are shown as a green connector. Residues present in the sample, but not in the model, are shown in grey.

- Molecule 1: Phosphoglucosamine mutase

Chain A:

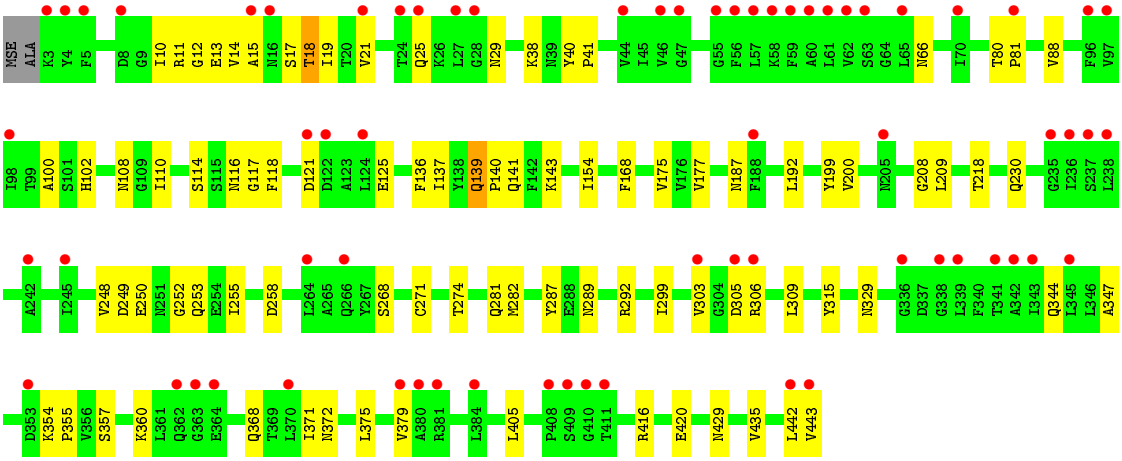

- Molecule 1: Phosphoglucosamine mutase

Chain B:

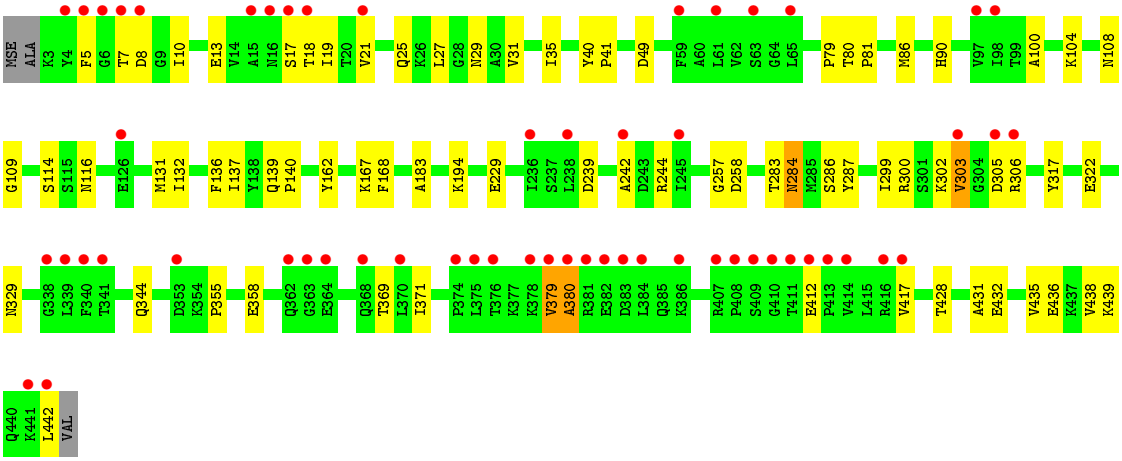

4 Data and refinement statistics (i)

Property	Value	Source
Space group	P 21 21 2	Depositor
Cell constants a, b, c, α, β, γ	104.43Å 206.68Å 44.76Å 90.00° 90.00° 90.00°	Depositor
Resolution (Å)	29.16 – 2.30 29.16 – 2.30	Depositor EDS
% Data completeness (in resolution range)	99.3 (29.16-2.30) 99.3 (29.16-2.30)	Depositor EDS
R_{merge}	0.07	Depositor
R_{sym}	(Not available)	Depositor
$< I/\sigma(I) >$ [1]	4.34 (at 2.31Å)	Xtriage
Refinement program	REFMAC 5.2.0019	Depositor
R, R_{free}	0.194 , 0.236 0.197 , 0.238	Depositor DCC
R_{free} test set	2216 reflections (5.05%)	wwPDB-VP
Wilson B-factor (Å^2)	36.9	Xtriage
Anisotropy	1.016	Xtriage
Bulk solvent k_{sol}(e/Å^3), B_{sol}(Å^2)	0.33 , 42.1	EDS
L-test for twinning[2]	$< \|L\| > = 0.46$, $< L^2 > = 0.29$	Xtriage
Estimated twinning fraction	No twinning to report.	Xtriage
F_o,F_c correlation	0.96	EDS
Total number of atoms	7026	wwPDB-VP
Average B, all atoms (Å^2)	41.0	wwPDB-VP

Xtriage's analysis on translational NCS is as follows: *The analyses of the Patterson function reveals a significant off-origin peak that is 35.66 % of the origin peak, indicating pseudo-translational symmetry. The chance of finding a peak of this or larger height randomly in a structure without pseudo-translational symmetry is equal to 5.6332e-04. The detected translational NCS is most likely also responsible for the elevated intensity ratio.*

[1] Intensities estimated from amplitudes.

[2] Theoretical values of $< |L| >$, $< L^2 >$ for acentric reflections are 0.5, 0.333 respectively for untwinned datasets, and 0.375, 0.2 for perfectly twinned datasets.

5 Model quality (i)

5.1 Standard geometry (i)

Bond lengths and bond angles in the following residue types are not validated in this section: ZN, SEP

The Z score for a bond length (or angle) is the number of standard deviations the observed value is removed from the expected value. A bond length (or angle) with $|Z| > 5$ is considered an outlier worth inspection. RMSZ is the root-mean-square of all Z scores of the bond lengths (or angles).

Mol	Chain	Bond lengths		Bond angles	
		RMSZ	$\#\|Z\| >5$	RMSZ	$\#\|Z\| >5$
1	A	0.34	0/3418	0.51	0/4603
1	B	0.36	1/3411 (0.0%)	0.50	0/4593
All	All	0.35	1/6829 (0.0%)	0.50	0/9196

All (1) bond length outliers are listed below:

Mol	Chain	Res	Type	Atoms	Z	Observed(Å)	Ideal(Å)
1	B	412	GLU	CD-OE2	7.97	1.34	1.25

There are no bond angle outliers.

There are no chirality outliers.

There are no planarity outliers.

5.2 Too-close contacts (i)

In the following table, the Non-H and H(model) columns list the number of non-hydrogen atoms and hydrogen atoms in the chain respectively. The H(added) column lists the number of hydrogen atoms added and optimized by MolProbity. The Clashes column lists the number of clashes within the asymmetric unit, whereas Symm-Clashes lists symmetry related clashes.

Mol	Chain	Non-H	H(model)	H(added)	Clashes	Symm-Clashes
1	A	3383	0	3383	73	0
1	B	3376	0	3374	56	0
2	A	1	0	0	0	0
2	B	1	0	0	0	0
3	A	132	0	0	3	0
3	B	133	0	0	4	0
All	All	7026	0	6757	125	0

The all-atom clashscore is defined as the number of clashes found per 1000 atoms (including hydrogen atoms). The all-atom clashscore for this structure is 9.

The worst 5 of 125 close contacts within the same asymmetric unit are listed below, sorted by their clash magnitude.

Atom-1	Atom-2	Interatomic distance (Å)	Clash overlap (Å)
1:A:329:ASN:HD22	1:A:344:GLN:HE22	1.19	0.87
1:A:329:ASN:ND2	1:A:344:GLN:HE22	1.74	0.85
1:B:29:ASN:HD21	1:B:137:ILE:H	1.25	0.83
1:A:282:MSE:HA	1:A:282:MSE:HE2	1.62	0.80
1:A:306:ARG:HG2	1:A:306:ARG:O	1.87	0.75

There are no symmetry-related clashes.

5.3 Torsion angles (i)

5.3.1 Protein backbone (i)

In the following table, the Percentiles column shows the percent Ramachandran outliers of the chain as a percentile score with respect to all X-ray entries followed by that with respect to entries of similar resolution.

The Analysed column shows the number of residues for which the backbone conformation was analysed, and the total number of residues.

Mol	Chain	Analysed	Favoured	Allowed	Outliers	Percentiles
1	A	438/443 (99%)	416 (95%)	19 (4%)	3 (1%)	22 26
1	B	437/443 (99%)	410 (94%)	21 (5%)	6 (1%)	11 11
All	All	875/886 (99%)	826 (94%)	40 (5%)	9 (1%)	15 17

5 of 9 Ramachandran outliers are listed below:

Mol	Chain	Res	Type
1	A	305	ASP
1	B	380	ALA
1	B	10	ILE
1	B	305	ASP
1	B	5	PHE

5.3.2 Protein sidechains (i)

In the following table, the Percentiles column shows the percent sidechain outliers of the chain as a percentile score with respect to all X-ray entries followed by that with respect to entries of similar resolution.

The Analysed column shows the number of residues for which the sidechain conformation was analysed, and the total number of residues.

Mol	Chain	Analysed	Rotameric	Outliers	Percentiles
1	A	364/358 (102%)	360 (99%)	4 (1%)	73 86
1	B	363/358 (101%)	362 (100%)	1 (0%)	92 97
All	All	727/716 (102%)	722 (99%)	5 (1%)	84 92

All (5) residues with a non-rotameric sidechain are listed below:

Mol	Chain	Res	Type
1	A	18	THR
1	A	110	ILE
1	A	139	GLN
1	A	379	VAL
1	B	284	ASN

Some sidechains can be flipped to improve hydrogen bonding and reduce clashes. 5 of 25 such sidechains are listed below:

Mol	Chain	Res	Type
1	A	344	GLN
1	A	372	ASN
1	B	331	ASN
1	A	362	GLN
1	B	29	ASN

5.3.3 RNA (i)

There are no RNA molecules in this entry.

5.4 Non-standard residues in protein, DNA, RNA chains (i)

2 non-standard protein/DNA/RNA residues are modelled in this entry.

In the following table, the Counts columns list the number of bonds (or angles) for which Mogul statistics could be retrieved, the number of bonds (or angles) that are observed in the model and

the number of bonds (or angles) that are defined in the Chemical Component Dictionary. The Link column lists molecule types, if any, to which the group is linked. The Z score for a bond length (or angle) is the number of standard deviations the observed value is removed from the expected value. A bond length (or angle) with $|Z| > 2$ is considered an outlier worth inspection. RMSZ is the root-mean-square of all Z scores of the bond lengths (or angles).

Mol	Type	Chain	Res	Link	Bond lengths			Bond angles		
					Counts	RMSZ	$\#\|Z\| > 2$	Counts	RMSZ	$\#\|Z\| > 2$
1	SEP	B	101	1,2	8,9,10	1.67	1 (12%)	8,12,14	2.05	2 (25%)
1	SEP	A	101	1,2	8,9,10	1.58	1 (12%)	8,12,14	2.00	2 (25%)

In the following table, the Chirals column lists the number of chiral outliers, the number of chiral centers analysed, the number of these observed in the model and the number defined in the Chemical Component Dictionary. Similar counts are reported in the Torsion and Rings columns. '-' means no outliers of that kind were identified.

Mol	Type	Chain	Res	Link	Chirals	Torsions	Rings
1	SEP	B	101	1,2	-	1/5/8/10	-
1	SEP	A	101	1,2	-	1/5/8/10	-

All (2) bond length outliers are listed below:

Mol	Chain	Res	Type	Atoms	Z	Observed(Å)	Ideal(Å)
1	B	101	SEP	P-O1P	3.64	1.62	1.50
1	A	101	SEP	P-O1P	3.37	1.61	1.50

All (4) bond angle outliers are listed below:

Mol	Chain	Res	Type	Atoms	Z	Observed(^{o})	Ideal(^{o})
1	A	101	SEP	OG-CB-CA	4.43	112.45	108.14
1	B	101	SEP	OG-CB-CA	4.34	112.37	108.14
1	B	101	SEP	P-OG-CB	-2.95	110.18	118.30
1	A	101	SEP	P-OG-CB	-2.82	110.52	118.30

There are no chirality outliers.

All (2) torsion outliers are listed below:

Mol	Chain	Res	Type	Atoms
1	B	101	SEP	N-CA-CB-OG
1	A	101	SEP	N-CA-CB-OG

There are no ring outliers.

No monomer is involved in short contacts.

5.5 Carbohydrates (i)

There are no carbohydrates in this entry.

5.6 Ligand geometry (i)

Of 2 ligands modelled in this entry, 2 are monoatomic - leaving 0 for Mogul analysis.

There are no bond length outliers.

There are no bond angle outliers.

There are no chirality outliers.

There are no torsion outliers.

There are no ring outliers.

No monomer is involved in short contacts.

5.7 Other polymers (i)

There are no such residues in this entry.

5.8 Polymer linkage issues (i)

There are no chain breaks in this entry.

6 Fit of model and data (i)

6.1 Protein, DNA and RNA chains (i)

In the following table, the column labelled '#RSRZ> 2' contains the number (and percentage) of RSRZ outliers, followed by percent RSRZ outliers for the chain as percentile scores relative to all X-ray entries and entries of similar resolution. The OWAB column contains the minimum, median, 95th percentile and maximum values of the occupancy-weighted average B-factor per residue. The column labelled 'Q< 0.9' lists the number of (and percentage) of residues with an average occupancy less than 0.9.

Mol	Chain	Analysed	<RSRZ>	#RSRZ>2			OWAB(Å^2)	Q<0.9
1	A	434/443 (97%)	0.70	67 (15%)	2	3	30, 40, 45, 69	0
1	B	433/443 (97%)	0.63	57 (13%)	3	4	32, 41, 46, 78	0
All	All	867/886 (97%)	0.66	124 (14%)	2	3	30, 40, 46, 78	0

The worst 5 of 124 RSRZ outliers are listed below:

Mol	Chain	Res	Type	RSRZ
1	B	413	PRO	8.3
1	A	443	VAL	7.8
1	B	381	ARG	7.0
1	B	7	THR	6.7
1	A	411	THR	6.3

6.2 Non-standard residues in protein, DNA, RNA chains (i)

In the following table, the Atoms column lists the number of modelled atoms in the group and the number defined in the chemical component dictionary. The B-factors column lists the minimum, median, 95th percentile and maximum values of B factors of atoms in the group. The column labelled 'Q< 0.9' lists the number of atoms with occupancy less than 0.9.

Mol	Type	Chain	Res	Atoms	RSCC	RSR	B-factors(Å^2)	Q<0.9
1	SEP	B	101	10/11	0.93	0.12	37,41,42,42	0
1	SEP	A	101	10/11	0.93	0.11	40,42,44,45	0

6.3 Carbohydrates (i)

There are no carbohydrates in this entry.

6.4 Ligands (i)

In the following table, the Atoms column lists the number of modelled atoms in the group and the number defined in the chemical component dictionary. The B-factors column lists the minimum, median, 95th percentile and maximum values of B factors of atoms in the group. The column labelled 'Q< 0.9' lists the number of atoms with occupancy less than 0.9.

Mol	Type	Chain	Res	Atoms	RSCC	RSR	B-factors(Å^2)	Q<0.9
2	ZN	B	900	1/1	0.93	0.24	57,57,57,57	1
2	ZN	A	900	1/1	0.96	0.26	68,68,68,68	1

6.5 Other polymers (i)

There are no such residues in this entry.