Full wwPDB X-ray Structure Validation Report (i)

Feb 18, 2024 – 10:42 AM EST

PDB ID	:	4E5T
Title	:	Crystal structure of a putative Mandelate racemase/Muconate lactonizing enzyme (Target PSI-200750) from Labrenzia alexandrii DFL-11
Authors	:	Kumar, P.R.; Bonanno, J.; Chowdhury, S.; Foti, R.; Gizzi, A.; Glen, S.; Hammonds, J.; Hillerich, B.; Matikainen, B.; Seidel, R.; Toro, R.; Zencheck, W.; Almo, S.C.; New York Structural Genomics Research Consortium (NYSGRC)
Deposited on	:	2012-03-14
Resolution	:	2.90 Å(reported)

This is a Full wwPDB X-ray Structure Validation Report for a publicly released PDB entry.

We welcome your comments at *validation@mail.wwpdb.org*
A user guide is available at
https://www.wwpdb.org/validation/2017/XrayValidationReportHelp
with specific help available everywhere you see the (i) symbol.

The types of validation reports are described at
http://www.wwpdb.org/validation/2017/FAQs#types.

The following versions of software and data (see references (1)) were used in the production of this report:

MolProbity	:	4.02b-467
Xtriage (Phenix)	:	1.13
EDS	:	2.36
Percentile statistics	:	20191225.v01 (using entries in the PDB archive December 25th 2019)
Refmac	:	5.8.0158
CCP4	:	7.0.044 (Gargrove)
Ideal geometry (proteins)	:	Engh & Huber (2001)
Ideal geometry (DNA, RNA)	:	Parkinson et al. (1996)
Validation Pipeline (wwPDB-VP)	:	2.36

1 Overall quality at a glance (i)

The following experimental techniques were used to determine the structure:
X-RAY DIFFRACTION

The reported resolution of this entry is 2.90 Å.

Percentile scores (ranging between 0-100) for global validation metrics of the entry are shown in the following graphic. The table shows the number of entries on which the scores are based.

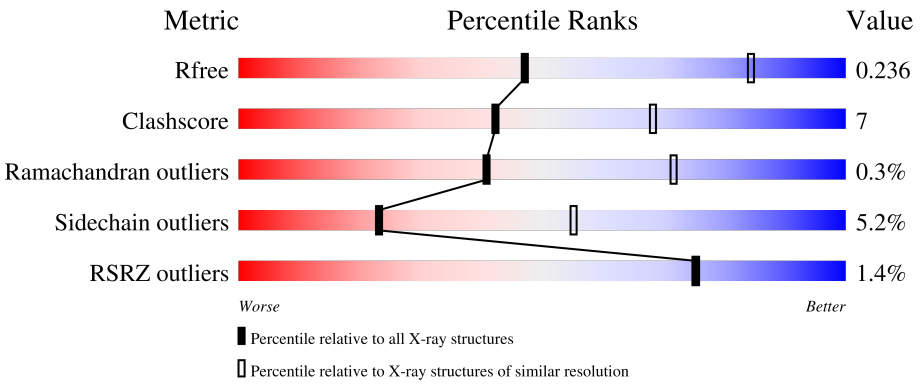

Metric	Whole archive (#Entries)	Similar resolution (#Entries, resolution range(Å))
R_{free}	130704	1957 (2.90-2.90)
Clashscore	141614	2172 (2.90-2.90)
Ramachandran outliers	138981	2115 (2.90-2.90)
Sidechain outliers	138945	2117 (2.90-2.90)
RSRZ outliers	127900	1906 (2.90-2.90)

The table below summarises the geometric issues observed across the polymeric chains and their fit to the electron density. The red, orange, yellow and green segments of the lower bar indicate the fraction of residues that contain outliers for >=3, 2, 1 and 0 types of geometric quality criteria respectively. A grey segment represents the fraction of residues that are not modelled. The numeric value for each fraction is indicated below the corresponding segment, with a dot representing fractions <=5% The upper red bar (where present) indicates the fraction of residues that have poor fit to the electron density. The numeric value is given above the bar.

Mol	Chain	Length	Quality of chain
1	A	404	76% 19% • •
1	B	404	78% 18% •
1	C	404	% 76% 18% • •
1	D	404	75% 19% • •
1	E	404	72% 18% • 8%

Continued on next page...

Continued from previous page...

Mol	Chain	Length	Quality of chain
1	F	404	% 76% 18%
1	G	404	3% 75% 16% 8%
1	H	404	4% 73% 18% 8%

2 Entry composition (i)

There are 3 unique types of molecules in this entry. The entry contains 23681 atoms, of which 0 are hydrogens and 0 are deuteriums.

In the tables below, the ZeroOcc column contains the number of atoms modelled with zero occupancy, the AltConf column contains the number of residues with at least one atom in alternate conformation and the Trace column contains the number of residues modelled with at most 2 atoms.

- Molecule 1 is a protein called Mandelate racemase / muconate lactonizing enzyme, C-terminal domain protein.

Mol	Chain	Residues	Atoms					ZeroOcc	AltConf	Trace
			Total	C	N	O	S			
1	A	392	3031	1939	513	564	15	0	0	0
1	B	387	3006	1920	511	560	15	0	1	0
1	C	386	2988	1910	506	557	15	0	0	0
1	D	388	3004	1920	509	560	15	0	0	0
1	E	371	2867	1834	485	533	15	0	0	0
1	F	386	2991	1911	507	558	15	0	0	0
1	G	370	2860	1830	484	531	15	0	0	0
1	H	371	2867	1834	485	533	15	0	0	0

There are 8 discrepancies between the modelled and reference sequences:

Chain	Residue	Modelled	Actual	Comment	Reference
A	0	SER	-	expression tag	UNP B9R417
B	0	SER	-	expression tag	UNP B9R417
C	0	SER	-	expression tag	UNP B9R417
D	0	SER	-	expression tag	UNP B9R417
E	0	SER	-	expression tag	UNP B9R417
F	0	SER	-	expression tag	UNP B9R417
G	0	SER	-	expression tag	UNP B9R417
H	0	SER	-	expression tag	UNP B9R417

- Molecule 2 is MAGNESIUM ION (three-letter code: MG) (formula: Mg).

Mol	Chain	Residues	Atoms	ZeroOcc	AltConf
2	A	1	Total Mg 1 1	0	0
2	B	1	Total Mg 1 1	0	0
2	C	1	Total Mg 1 1	0	0
2	D	1	Total Mg 1 1	0	0
2	E	1	Total Mg 1 1	0	0
2	F	1	Total Mg 1 1	0	0
2	G	1	Total Mg 1 1	0	0
2	H	1	Total Mg 1 1	0	0

- Molecule 3 is water.

Mol	Chain	Residues	Atoms	ZeroOcc	AltConf
3	A	8	Total O 8 8	0	0
3	B	9	Total O 9 9	0	0
3	C	8	Total O 8 8	0	0
3	D	10	Total O 10 10	0	0
3	E	9	Total O 9 9	0	0
3	F	5	Total O 5 5	0	0
3	G	6	Total O 6 6	0	0
3	H	4	Total O 4 4	0	0

3 Residue-property plots (i)

These plots are drawn for all protein, RNA, DNA and oligosaccharide chains in the entry. The first graphic for a chain summarises the proportions of the various outlier classes displayed in the second graphic. The second graphic shows the sequence view annotated by issues in geometry and electron density. Residues are color-coded according to the number of geometric quality criteria for which they contain at least one outlier: green = 0, yellow = 1, orange = 2 and red = 3 or more. A red dot above a residue indicates a poor fit to the electron density (RSRZ > 2). Stretches of 2 or more consecutive residues without any outlier are shown as a green connector. Residues present in the sample, but not in the model, are shown in grey.

• Molecule 1: Mandelate racemase / muconate lactonizing enzyme, C-terminal domain protein

Chain A:

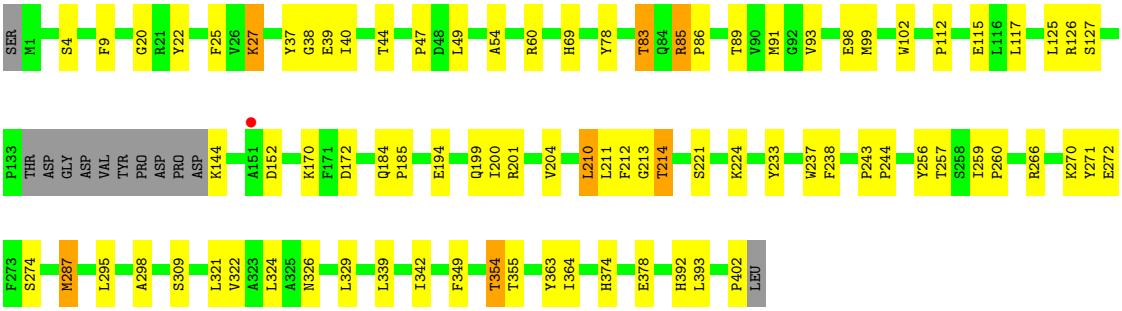

• Molecule 1: Mandelate racemase / muconate lactonizing enzyme, C-terminal domain protein

Chain B:

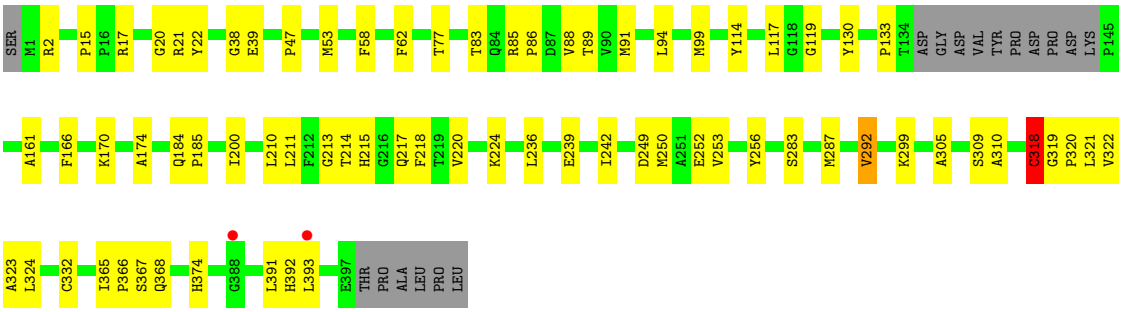

• Molecule 1: Mandelate racemase / muconate lactonizing enzyme, C-terminal domain protein

Chain C:

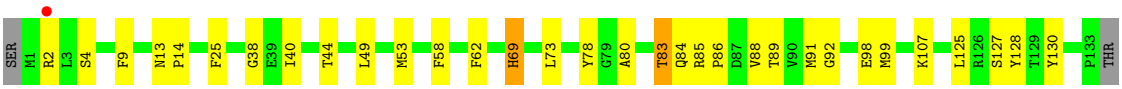

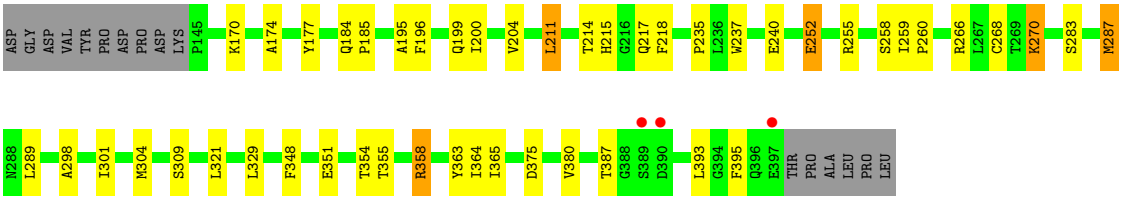

• Molecule 1: Mandelate racemase / muconate lactonizing enzyme, C-terminal domain protein

Chain D:

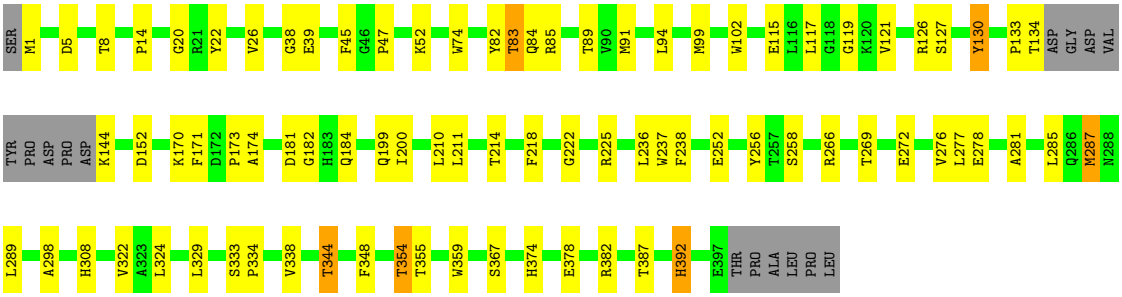

• Molecule 1: Mandelate racemase / muconate lactonizing enzyme, C-terminal domain protein

Chain E:

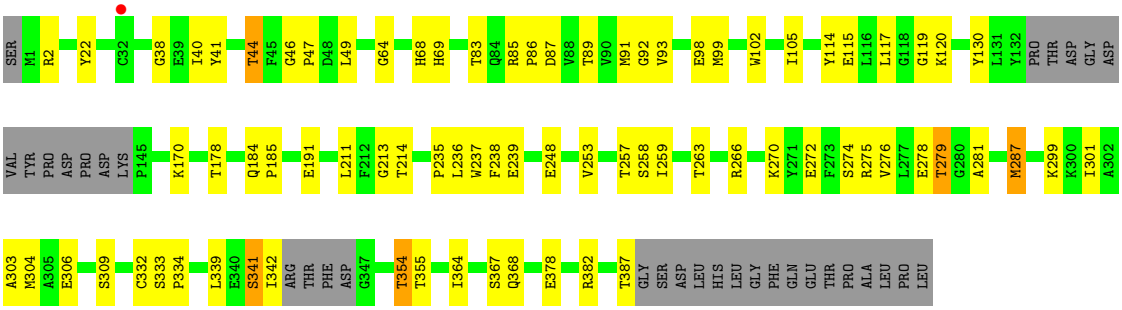

• Molecule 1: Mandelate racemase / muconate lactonizing enzyme, C-terminal domain protein

Chain F:

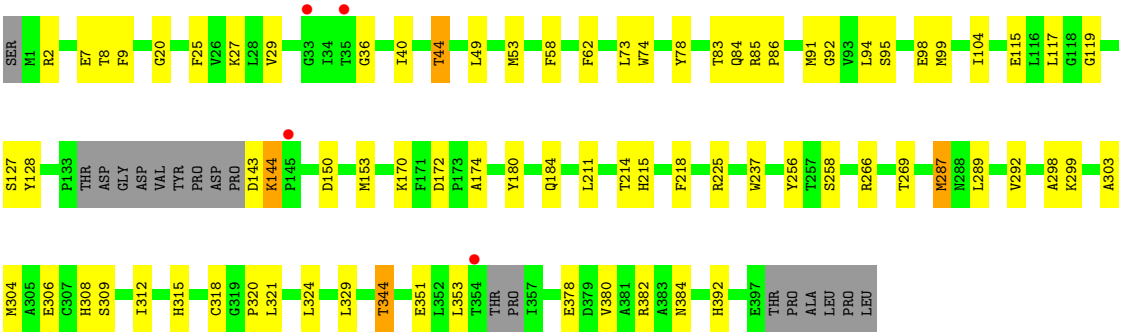

• Molecule 1: Mandelate racemase / muconate lactonizing enzyme, C-terminal domain protein

Chain G:

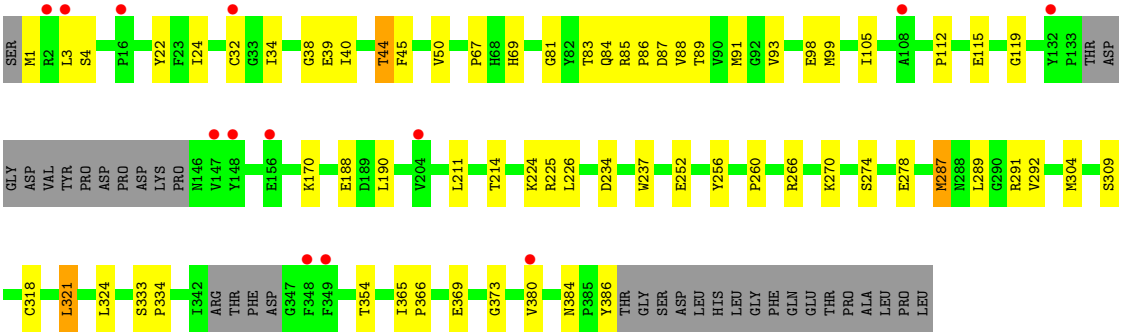

• Molecule 1: Mandelate racemase / muconate lactonizing enzyme, C-terminal domain protein

Chain H:

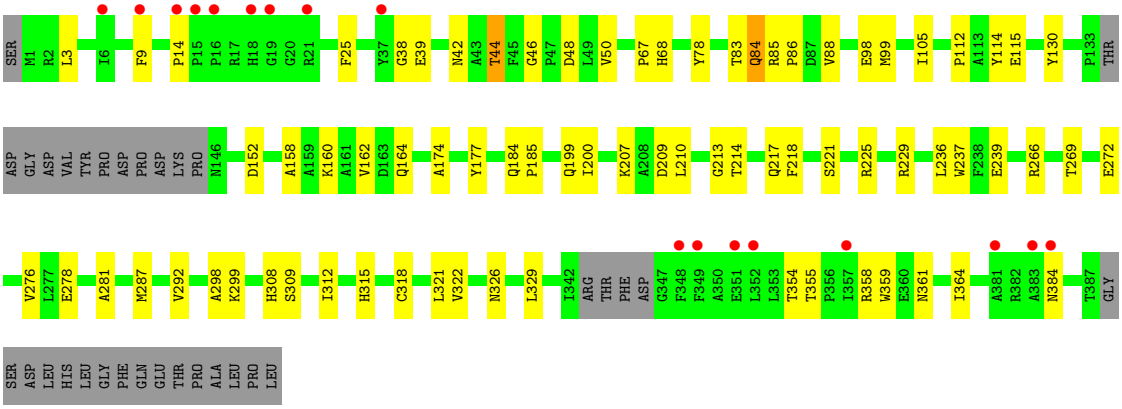

4 Data and refinement statistics (i)

Property	Value	Source
Space group	P 21 21 21	Depositor
Cell constants a, b, c, α, β, γ	98.90Å 156.88Å 218.24Å 90.00° 90.00° 90.00°	Depositor
Resolution (Å)	49.45 – 2.90 49.45 – 2.90	Depositor EDS
% Data completeness (in resolution range)	100.0 (49.45-2.90) 100.0 (49.45-2.90)	Depositor EDS
R_{merge}	0.14	Depositor
R_{sym}	(Not available)	Depositor
$< I/\sigma(I) >$ [1]	2.70 (at 2.91Å)	Xtriage
Refinement program	PHENIX 1.7.3_928	Depositor
R, R_{free}	0.164 , 0.242 0.157 , 0.236	Depositor DCC
R_{free} test set	3817 reflections (5.03%)	wwPDB-VP
Wilson B-factor (Å^2)	55.7	Xtriage
Anisotropy	0.354	Xtriage
Bulk solvent k_{sol}(e/Å^3), B_{sol}(Å^2)	0.32 , 50.7	EDS
L-test for twinning[2]	$< \|L\| > = 0.48$, $< L^2 > = 0.31$	Xtriage
Estimated twinning fraction	No twinning to report.	Xtriage
F_o,F_c correlation	0.95	EDS
Total number of atoms	23681	wwPDB-VP
Average B, all atoms (Å^2)	56.0	wwPDB-VP

Xtriage's analysis on translational NCS is as follows: *The largest off-origin peak in the Patterson function is 2.31% of the height of the origin peak. No significant pseudotranslation is detected.*

[1] Intensities estimated from amplitudes.

[2] Theoretical values of $< |L| >$, $< L^2 >$ for acentric reflections are 0.5, 0.333 respectively for untwinned datasets, and 0.375, 0.2 for perfectly twinned datasets.

5 Model quality (i)

5.1 Standard geometry (i)

Bond lengths and bond angles in the following residue types are not validated in this section: MG

The Z score for a bond length (or angle) is the number of standard deviations the observed value is removed from the expected value. A bond length (or angle) with $|Z| > 5$ is considered an outlier worth inspection. RMSZ is the root-mean-square of all Z scores of the bond lengths (or angles).

Mol	Chain	Bond lengths		Bond angles	
		RMSZ	$\#\|Z\| >5$	RMSZ	$\#\|Z\| >5$
1	A	0.45	0/3110	0.62	0/4227
1	B	0.42	0/3083	0.61	0/4187
1	C	0.41	0/3065	0.58	0/4163
1	D	0.41	0/3081	0.59	0/4185
1	E	0.44	0/2939	0.61	0/3991
1	F	0.37	0/3066	0.54	0/4161
1	G	0.38	0/2932	0.55	0/3982
1	H	0.36	0/2939	0.53	0/3992
All	All	0.41	0/24215	0.58	0/32888

There are no bond length outliers.

There are no bond angle outliers.

There are no chirality outliers.

There are no planarity outliers.

5.2 Too-close contacts (i)

In the following table, the Non-H and H(model) columns list the number of non-hydrogen atoms and hydrogen atoms in the chain respectively. The H(added) column lists the number of hydrogen atoms added and optimized by MolProbity. The Clashes column lists the number of clashes within the asymmetric unit, whereas Symm-Clashes lists symmetry-related clashes.

Mol	Chain	Non-H	H(model)	H(added)	Clashes	Symm-Clashes
1	A	3031	0	2966	50	0
1	B	3006	0	2936	49	0
1	C	2988	0	2917	48	0
1	D	3004	0	2936	47	0
1	E	2867	0	2809	48	0

Continued on next page...

Continued from previous page...

Mol	Chain	Non-H	H(model)	H(added)	Clashes	Symm-Clashes
1	F	2991	0	2918	48	0
1	G	2860	0	2801	41	0
1	H	2867	0	2808	43	0
2	A	1	0	0	0	0
2	B	1	0	0	0	0
2	C	1	0	0	0	0
2	D	1	0	0	0	0
2	E	1	0	0	0	0
2	F	1	0	0	0	0
2	G	1	0	0	0	0
2	H	1	0	0	0	0
3	A	8	0	0	0	0
3	B	9	0	0	0	0
3	C	8	0	0	0	0
3	D	10	0	0	0	0
3	E	9	0	0	0	0
3	F	5	0	0	0	0
3	G	6	0	0	0	0
3	H	4	0	0	0	0
All	All	23681	0	23091	321	0

The all-atom clashscore is defined as the number of clashes found per 1000 atoms (including hydrogen atoms). The all-atom clashscore for this structure is 7.

All (321) close contacts within the same asymmetric unit are listed below, sorted by their clash magnitude.

Atom-1	Atom-2	Interatomic distance (Å)	Clash overlap (Å)
1:B:287:MET:HG2	1:B:292:VAL:HG21	1.56	0.86
1:B:85:ARG:NH1	1:B:86:PRO:O	2.12	0.83
1:E:85:ARG:NH1	1:E:86:PRO:O	2.14	0.80
1:B:38:GLY:HA2	1:B:99:MET:HE2	1.65	0.78
1:H:213:GLY:HA2	1:H:239:GLU:HB3	1.71	0.71
1:C:85:ARG:NH1	1:C:86:PRO:O	2.26	0.69
1:A:37:TYR:HB3	1:A:321:LEU:HD21	1.75	0.69
1:H:85:ARG:NH1	1:H:86:PRO:O	2.26	0.69
1:C:85:ARG:NH2	1:D:272:GLU:OE2	2.27	0.68
1:H:14:PRO:HG3	1:H:384:ASN:HD21	1.59	0.66
1:G:38:GLY:HA2	1:G:99:MET:HE2	1.77	0.66
1:D:278:GLU:OE2	1:H:308:HIS:NE2	2.28	0.65
1:D:20:GLY:HA3	1:D:392:HIS:CE1	2.32	0.65
1:A:20:GLY:HA3	1:A:392:HIS:CE1	2.33	0.64

Continued on next page...

Continued from previous page...

Atom-1	Atom-2	Interatomic distance (Å)	Clash overlap (Å)
1:B:89:THR:HG21	1:G:89:THR:HG21	1.78	0.64
1:F:85:ARG:NH1	1:F:86:PRO:O	2.30	0.64
1:H:152:ASP:OD1	1:H:199:GLN:NE2	2.31	0.63
1:F:380:VAL:O	1:F:384:ASN:ND2	2.26	0.63
1:D:83:THR:OG1	1:D:84:GLN:N	2.32	0.63
1:F:344:THR:O	1:F:344:THR:OG1	2.17	0.63
1:H:177:TYR:HB3	1:H:217:GLN:HG3	1.81	0.63
1:H:184:GLN:HG3	1:H:185:PRO:HD2	1.81	0.62
1:C:184:GLN:HG2	1:H:236:LEU:HD11	1.81	0.62
1:H:315:HIS:O	1:H:326:ASN:ND2	2.32	0.62
1:H:38:GLY:HA2	1:H:99:MET:HE2	1.81	0.62
1:C:9:PHE:HB2	1:C:25:PHE:HB2	1.82	0.62
1:H:68:HIS:HA	1:H:105:ILE:HD11	1.81	0.61
1:A:85:ARG:NH2	1:E:272:GLU:OE2	2.34	0.61
1:E:354:THR:HG22	1:E:355:THR:HG23	1.82	0.61
1:G:266:ARG:HA	1:G:291:ARG:HH11	1.64	0.61
1:A:89:THR:HG21	1:E:89:THR:HG21	1.82	0.61
1:E:85:ARG:HH11	1:E:85:ARG:HG3	1.66	0.60
1:G:380:VAL:O	1:G:384:ASN:ND2	2.35	0.60
1:B:184:GLN:HG3	1:B:185:PRO:HD2	1.84	0.60
1:C:38:GLY:HA2	1:C:99:MET:HE2	1.83	0.59
1:E:38:GLY:HA2	1:E:99:MET:HE2	1.83	0.59
1:F:44:THR:HG23	1:H:83:THR:HG21	1.85	0.59
1:C:125:LEU:HB2	1:C:364:ILE:HB	1.84	0.59
1:E:68:HIS:HA	1:E:105:ILE:HD11	1.84	0.59
1:F:128:TYR:HE1	1:F:170:LYS:HE2	1.68	0.59
1:A:85:ARG:NH1	1:A:86:PRO:O	2.29	0.59
1:F:83:THR:HG21	1:H:44:THR:HG23	1.84	0.59
1:D:126:ARG:HG2	1:D:338:VAL:HG23	1.85	0.58
1:H:354:THR:HG22	1:H:355:THR:HG23	1.85	0.58
1:C:211:LEU:HD13	1:C:237:TRP:CZ2	2.39	0.58
1:H:298:ALA:HB1	1:H:329:LEU:HD22	1.85	0.58
1:B:130:TYR:CZ	1:B:170:LYS:HE3	2.39	0.57
1:G:1:MET:HE1	1:G:34:ILE:HD12	1.86	0.57
1:D:152:ASP:OD1	1:D:199:GLN:NE2	2.37	0.57
1:C:53:MET:HB3	1:D:45:PHE:CE1	2.40	0.57
1:C:266:ARG:HD2	1:D:83:THR:O	2.05	0.57
1:E:170:LYS:NZ	1:E:239:GLU:OE1	2.32	0.57
1:E:40:ILE:HD13	1:E:93:VAL:HG22	1.87	0.57
1:H:359:TRP:HD1	1:H:364:ILE:HD13	1.69	0.57
1:B:20:GLY:HA3	1:B:392:HIS:CE1	2.40	0.57

Continued on next page...

Continued from previous page...

Atom-1	Atom-2	Interatomic distance (Å)	Clash overlap (Å)
1:H:276:VAL:HG13	1:H:281:ALA:HB3	1.87	0.57
1:E:130:TYR:CZ	1:E:170:LYS:HE3	2.40	0.57
1:E:213:GLY:HA2	1:E:239:GLU:HB3	1.86	0.56
1:G:289:LEU:HA	1:G:292:VAL:HG12	1.86	0.56
1:B:85:ARG:HD2	1:G:266:ARG:O	2.05	0.56
1:C:351:GLU:HG2	1:C:380:VAL:HG11	1.88	0.56
1:G:190:LEU:HD23	1:G:226:LEU:HD12	1.86	0.56
1:D:130:TYR:CZ	1:D:170:LYS:HE3	2.40	0.56
1:D:39:GLU:HB3	1:D:322:VAL:HG23	1.88	0.55
1:E:211:LEU:HD21	1:E:236:LEU:HD23	1.88	0.55
1:F:143:ASP:O	1:F:144:LYS:HG2	2.06	0.55
1:D:308:HIS:NE2	1:H:278:GLU:OE2	2.37	0.55
1:F:85:ARG:HD2	1:H:266:ARG:O	2.06	0.55
1:G:287:MET:HE3	1:G:287:MET:H	1.72	0.55
1:D:378:GLU:OE2	1:D:382:ARG:NH1	2.39	0.55
1:H:158:ALA:O	1:H:162:VAL:HG23	2.06	0.55
1:C:215:HIS:N	1:C:217:GLN:OE1	2.38	0.55
1:G:260:PRO:HG3	1:H:221:SER:HB2	1.90	0.54
1:B:15:PRO:HA	1:B:17:ARG:N	2.22	0.54
1:D:102:TRP:CH2	1:D:117:LEU:HD21	2.43	0.54
1:F:78:TYR:HD1	1:F:91:MET:HE1	1.72	0.54
1:A:112:PRO:HD2	1:A:115:GLU:HG3	1.90	0.54
1:A:27:LYS:HE3	1:A:378:GLU:OE1	2.08	0.54
1:G:234:ASP:OD2	1:H:229:ARG:NH1	2.40	0.54
1:B:321:LEU:HD23	1:B:324:LEU:HD12	1.89	0.54
1:D:38:GLY:HA2	1:D:99:MET:HE2	1.90	0.54
1:F:172:ASP:OD2	1:F:215:HIS:ND1	2.41	0.54
1:E:214:THR:OG1	1:E:239:GLU:O	2.25	0.54
1:B:174:ALA:HB1	1:B:218:PHE:HZ	1.73	0.53
1:D:276:VAL:HG13	1:D:281:ALA:HB3	1.90	0.53
1:A:272:GLU:OE2	1:E:85:ARG:NH2	2.41	0.53
1:F:9:PHE:HB2	1:F:25:PHE:HB2	1.89	0.53
1:A:298:ALA:HB1	1:A:329:LEU:HD22	1.91	0.53
1:B:77:THR:HG21	1:B:94:LEU:HD13	1.89	0.53
1:C:354:THR:HG22	1:C:355:THR:HG23	1.91	0.53
1:H:9:PHE:HB2	1:H:25:PHE:HB2	1.91	0.53
1:A:354:THR:HG22	1:A:355:THR:HG23	1.90	0.53
1:A:38:GLY:HA2	1:A:99:MET:HE2	1.90	0.52
1:F:78:TYR:CD1	1:F:91:MET:HE1	2.45	0.52
1:A:83:THR:O	1:E:266:ARG:HD2	2.09	0.52
1:C:301:ILE:HA	1:C:304:MET:HE3	1.90	0.52

Continued on next page...

Continued from previous page...

Atom-1	Atom-2	Interatomic distance (Å)	Clash overlap (Å)
1:E:276:VAL:HG13	1:E:281:ALA:HB3	1.92	0.52
1:C:44:THR:HG22	1:D:83:THR:HG21	1.91	0.52
1:D:115:GLU:HA	1:D:119:GLY:HA2	1.91	0.51
1:D:354:THR:HG22	1:D:355:THR:HG23	1.91	0.51
1:D:174:ALA:HB1	1:D:218:PHE:HZ	1.74	0.51
1:C:40:ILE:HG23	1:C:92:GLY:O	2.11	0.51
1:A:40:ILE:HD13	1:A:93:VAL:HA	1.93	0.51
1:F:7:GLU:HB3	1:F:27:LYS:HD3	1.92	0.51
1:B:83:THR:HG21	1:G:44:THR:HG23	1.92	0.51
1:C:252:GLU:OE1	1:C:255:ARG:NH2	2.42	0.51
1:H:78:TYR:CE2	1:H:84:GLN:HG2	2.46	0.51
1:D:344:THR:HG22	1:D:359:TRP:CD2	2.46	0.51
1:F:308:HIS:NE2	1:G:278:GLU:OE2	2.41	0.51
1:G:85:ARG:NH1	1:G:86:PRO:O	2.43	0.51
1:C:80:ALA:O	1:C:83:THR:HG23	2.11	0.50
1:F:174:ALA:HB1	1:F:218:PHE:HZ	1.76	0.50
1:B:21:ARG:NH1	1:B:391:LEU:O	2.44	0.50
1:B:287:MET:H	1:B:287:MET:HE2	1.76	0.50
1:A:39:GLU:HB3	1:A:322:VAL:HG23	1.93	0.50
1:F:83:THR:O	1:H:266:ARG:HD2	2.11	0.50
1:E:40:ILE:HG23	1:E:92:GLY:O	2.12	0.50
1:F:85:ARG:NH2	1:H:272:GLU:OE2	2.36	0.50
1:A:69:HIS:HA	1:B:119:GLY:HA3	1.94	0.50
1:E:248:GLU:HG3	1:E:279:THR:HG21	1.94	0.50
1:H:160:LYS:O	1:H:164:GLN:HG3	2.12	0.50
1:A:170:LYS:HB2	1:A:211:LEU:HB2	1.93	0.50
1:A:256:TYR:OH	1:C:258:SER:HB3	2.12	0.50
1:E:274:SER:O	1:E:278:GLU:HG3	2.11	0.50
1:E:339:LEU:HD23	1:E:364:ILE:HG13	1.93	0.50
1:A:78:TYR:CD1	1:A:91:MET:HE1	2.47	0.50
1:B:88:VAL:N	1:G:87:ASP:OD1	2.44	0.50
1:C:200:ILE:O	1:C:204:VAL:HG22	2.12	0.49
1:G:39:GLU:OE2	1:G:318:CYS:HB2	2.13	0.49
1:D:324:LEU:HD11	1:D:374:HIS:HB2	1.95	0.49
1:C:185:PRO:HB3	1:C:218:PHE:CE1	2.47	0.49
1:D:22:TYR:CE1	1:D:47:PRO:HB3	2.47	0.49
1:B:211:LEU:HD21	1:B:236:LEU:HD23	1.94	0.49
1:A:221:SER:HB2	1:C:260:PRO:HG3	1.94	0.49
1:F:320:PRO:HB2	1:F:353:LEU:HD11	1.94	0.49
1:C:85:ARG:HD2	1:D:266:ARG:O	2.13	0.49
1:C:235:PRO:HG2	1:C:259:ILE:HD13	1.95	0.49

Continued on next page...

Continued from previous page...

Atom-1	Atom-2	Interatomic distance (Å)	Clash overlap (Å)
1:E:22:TYR:CZ	1:E:47:PRO:HD3	2.47	0.48
1:G:22:TYR:HB3	1:G:386:TYR:CD1	2.47	0.48
1:A:22:TYR:CE1	1:A:47:PRO:HB3	2.48	0.48
1:C:177:TYR:HB3	1:C:217:GLN:HG3	1.94	0.48
1:B:58:PHE:HA	1:B:62:PHE:HB2	1.96	0.48
1:C:128:TYR:HE1	1:C:170:LYS:HE2	1.79	0.48
1:E:341:SER:OG	1:E:342:ILE:N	2.45	0.48
1:F:184:GLN:HE21	1:F:225:ARG:HH11	1.61	0.48
1:F:287:MET:O	1:F:315:HIS:N	2.43	0.48
1:A:272:GLU:CD	1:E:85:ARG:HH21	2.17	0.48
1:F:321:LEU:HD23	1:F:324:LEU:HD12	1.95	0.48
1:G:3:LEU:HG	1:G:67:PRO:HD3	1.96	0.48
1:A:324:LEU:HD11	1:A:374:HIS:HB2	1.95	0.48
1:C:130:TYR:CZ	1:C:170:LYS:HE3	2.49	0.48
1:F:351:GLU:HG2	1:F:380:VAL:HG11	1.95	0.48
1:G:115:GLU:HA	1:G:119:GLY:HA2	1.95	0.48
1:F:115:GLU:HA	1:F:119:GLY:HA2	1.96	0.47
1:G:83:THR:OG1	1:G:84:GLN:N	2.47	0.47
1:A:9:PHE:HB2	1:A:25:PHE:HB2	1.96	0.47
1:B:83:THR:O	1:G:266:ARG:HD2	2.15	0.47
1:C:58:PHE:HA	1:C:62:PHE:HB2	1.96	0.47
1:G:224:LYS:HD2	1:G:256:TYR:CG	2.50	0.47
1:D:256:TYR:OH	1:E:258:SER:HB3	2.15	0.47
1:B:53:MET:HB3	1:G:45:PHE:CE1	2.49	0.47
1:B:236:LEU:HD11	1:E:184:GLN:HG2	1.97	0.47
1:C:304:MET:HG2	1:E:304:MET:HG2	1.97	0.47
1:E:114:TYR:HB2	1:E:332:CYS:HB3	1.97	0.47
1:C:14:PRO:HD2	1:C:348:PHE:CD2	2.50	0.46
1:F:287:MET:HG2	1:F:292:VAL:HG21	1.97	0.46
1:B:117:LEU:O	1:B:299:LYS:HE2	2.16	0.46
1:F:20:GLY:HA3	1:F:392:HIS:CE1	2.51	0.46
1:G:1:MET:CE	1:G:34:ILE:HD12	2.45	0.46
1:A:257:THR:OG1	1:A:259:ILE:HG13	2.15	0.46
1:E:287:MET:HB2	1:E:287:MET:HE3	1.65	0.46
1:C:89:THR:HG21	1:D:89:THR:HG21	1.98	0.46
1:A:201:ARG:NH1	1:A:210:LEU:HD22	2.30	0.46
1:B:318:CYS:HB2	1:B:319:GLY:H	1.61	0.46
1:H:112:PRO:HD2	1:H:115:GLU:HG3	1.97	0.46
1:C:195:ALA:O	1:C:199:GLN:HG2	2.16	0.46
1:G:112:PRO:HD2	1:G:115:GLU:HG3	1.97	0.46
1:B:39:GLU:OE2	1:B:318:CYS:HB2	2.16	0.46

Continued on next page...

Continued from previous page...

Atom-1	Atom-2	Interatomic distance (Å)	Clash overlap (Å)
1:B:320:PRO:O	1:B:323:ALA:HB3	2.16	0.46
1:F:49:LEU:O	1:F:53:MET:HG3	2.16	0.46
1:E:115:GLU:HA	1:E:119:GLY:HA2	1.98	0.45
1:H:162:VAL:HG11	1:H:207:LYS:HB3	1.99	0.45
1:A:83:THR:HG21	1:E:44:THR:HG22	1.98	0.45
1:B:256:TYR:OH	1:F:258:SER:HB3	2.16	0.45
1:A:287:MET:HE3	1:A:287:MET:HB2	1.78	0.45
1:C:174:ALA:HB1	1:C:218:PHE:CZ	2.51	0.45
1:D:236:LEU:HD11	1:F:184:GLN:HG2	1.97	0.45
1:A:125:LEU:HB2	1:A:364:ILE:HB	1.98	0.45
1:D:74:TRP:CD1	1:D:94:LEU:HD21	2.51	0.45
1:H:221:SER:O	1:H:225:ARG:HG3	2.16	0.45
1:E:102:TRP:CH2	1:E:117:LEU:HD21	2.51	0.45
1:G:321:LEU:HG	1:G:324:LEU:HD12	1.99	0.45
1:H:214:THR:OG1	1:H:239:GLU:O	2.27	0.45
1:A:54:ALA:HA	1:A:93:VAL:HG13	1.99	0.45
1:C:174:ALA:HB1	1:C:218:PHE:HZ	1.82	0.45
1:E:253:VAL:O	1:E:257:THR:HG22	2.17	0.45
1:A:402:PRO:HB3	1:C:363:TYR:OH	2.17	0.45
1:F:287:MET:HE1	1:F:312:ILE:HB	1.99	0.45
1:B:324:LEU:HD11	1:B:374:HIS:HB2	1.98	0.45
1:F:62:PHE:CE2	1:F:73:LEU:HD13	2.52	0.45
1:G:266:ARG:HA	1:G:291:ARG:NH1	2.32	0.45
1:A:260:PRO:HD3	1:G:225:ARG:HD2	2.00	0.44
1:B:161:ALA:O	1:B:166:PHE:HB2	2.17	0.44
1:C:240:GLU:OE1	1:D:82:TYR:OH	2.32	0.44
1:G:24:ILE:HD13	1:G:50:VAL:HG11	1.99	0.44
1:G:67:PRO:O	1:G:105:ILE:HD11	2.17	0.44
1:H:3:LEU:HD21	1:H:67:PRO:HB3	1.98	0.44
1:B:39:GLU:HB3	1:B:322:VAL:HG23	1.99	0.44
1:F:58:PHE:HA	1:F:62:PHE:HB2	2.00	0.44
1:F:95:SER:O	1:F:99:MET:HG3	2.17	0.44
1:C:91:MET:HG2	1:C:268:CYS:HB2	1.99	0.44
1:C:287:MET:HE3	1:C:287:MET:HB2	1.60	0.44
1:H:46:GLY:O	1:H:50:VAL:HG23	2.18	0.44
1:B:15:PRO:HG3	1:B:17:ARG:HH11	1.83	0.44
1:D:277:LEU:HD21	1:D:285:LEU:HD11	1.98	0.44
1:A:152:ASP:OD1	1:A:199:GLN:NE2	2.33	0.44
1:B:220:VAL:HG13	1:B:253:VAL:HG23	1.99	0.44
1:B:365:ILE:HA	1:B:366:PRO:HD3	1.93	0.44
1:C:25:PHE:CD1	1:C:321:LEU:HD12	2.53	0.44

Continued on next page...

Continued from previous page...

Atom-1	Atom-2	Interatomic distance (Å)	Clash overlap (Å)
1:D:236:LEU:CD1	1:F:184:GLN:HG2	2.47	0.44
1:A:342:ILE:HG13	1:A:349:PHE:CZ	2.53	0.43
1:B:91:MET:HB2	1:B:91:MET:HE2	1.85	0.43
1:C:395:PHE:CE2	1:D:82:TYR:HA	2.53	0.43
1:F:128:TYR:CE1	1:F:170:LYS:HE2	2.50	0.43
1:B:214:THR:OG1	1:B:239:GLU:O	2.26	0.43
1:C:69:HIS:HA	1:E:119:GLY:HA3	1.99	0.43
1:E:2:ARG:HE	1:E:64:GLY:HA2	1.84	0.43
1:B:22:TYR:CE1	1:B:47:PRO:HB3	2.54	0.43
1:E:333:SER:HA	1:E:334:PRO:HD2	1.82	0.43
1:A:326:ASN:HB3	1:A:339:LEU:HD11	2.01	0.43
1:D:14:PRO:HD2	1:D:348:PHE:CD2	2.53	0.43
1:B:15:PRO:HG3	1:B:17:ARG:NH1	2.32	0.43
1:D:184:GLN:OE1	1:D:222:GLY:HA2	2.19	0.43
1:B:200:ILE:HG22	1:B:210:LEU:HD11	2.01	0.43
1:D:121:VAL:HG13	1:F:180:TYR:CZ	2.54	0.43
1:D:170:LYS:HG3	1:D:211:LEU:O	2.18	0.43
1:E:184:GLN:HG3	1:E:185:PRO:HD2	2.01	0.43
1:E:303:ALA:O	1:E:306:GLU:HB2	2.19	0.43
1:F:74:TRP:HA	1:F:94:LEU:HD21	2.00	0.43
1:F:117:LEU:O	1:F:299:LYS:HE2	2.18	0.43
1:F:303:ALA:O	1:F:306:GLU:HB2	2.19	0.43
1:F:304:MET:HG2	1:G:304:MET:HG2	2.01	0.43
1:G:85:ARG:HG3	1:G:85:ARG:HH11	1.82	0.43
1:G:365:ILE:HA	1:G:366:PRO:HD3	1.87	0.43
1:F:266:ARG:O	1:H:85:ARG:HD2	2.18	0.43
1:D:171:PHE:HD2	1:D:173:PRO:HD3	1.84	0.43
1:D:258:SER:HB3	1:F:256:TYR:OH	2.18	0.43
1:B:393:LEU:O	1:G:81:GLY:HA2	2.19	0.42
1:C:107:LYS:NZ	1:C:375:ASP:OD1	2.43	0.42
1:H:287:MET:HE3	1:H:287:MET:HB2	1.95	0.42
1:A:243:PRO:HA	1:A:244:PRO:HD3	1.83	0.42
1:B:224:LYS:HD2	1:B:256:TYR:CG	2.54	0.42
1:D:184:GLN:HG2	1:E:236:LEU:HD11	2.01	0.42
1:C:78:TYR:CD2	1:C:84:GLN:HG2	2.54	0.42
1:G:270:LYS:O	1:G:274:SER:HB2	2.19	0.42
1:H:114:TYR:CD1	1:H:115:GLU:HG2	2.53	0.42
1:F:119:GLY:HA3	1:G:69:HIS:HA	2.01	0.42
1:B:215:HIS:N	1:B:217:GLN:OE1	2.51	0.42
1:B:250:MET:HE3	1:B:250:MET:HB2	1.98	0.42
1:D:184:GLN:HG3	1:D:225:ARG:NH1	2.35	0.42

Continued on next page...

Continued from previous page...

Atom-1	Atom-2	Interatomic distance (Å)	Clash overlap (Å)
1:H:287:MET:HE1	1:H:312:ILE:HB	2.00	0.42
1:A:212:PHE:CE1	1:A:214:THR:HG23	2.55	0.42
1:B:305:ALA:HB1	1:B:310:ALA:HB3	2.02	0.42
1:E:378:GLU:OE2	1:E:382:ARG:NH1	2.53	0.42
1:A:44:THR:CG2	1:E:83:THR:HG21	2.50	0.42
1:A:237:TRP:CD1	1:A:237:TRP:C	2.93	0.42
1:F:298:ALA:HB1	1:F:329:LEU:HD22	2.02	0.42
1:A:78:TYR:HD1	1:A:91:MET:HE1	1.83	0.41
1:C:298:ALA:HB1	1:C:329:LEU:HD22	2.01	0.41
1:B:213:GLY:HA2	1:B:239:GLU:HB3	2.02	0.41
1:C:270:LYS:HB2	1:C:304:MET:HE1	2.02	0.41
1:F:36:GLY:HA3	1:F:104:ILE:HG13	2.01	0.41
1:D:298:ALA:HB1	1:D:329:LEU:HD22	2.02	0.41
1:E:46:GLY:HA2	1:E:47:PRO:HD2	1.80	0.41
1:F:40:ILE:HG23	1:F:92:GLY:O	2.19	0.41
1:B:321:LEU:HD23	1:B:321:LEU:HA	1.82	0.41
1:C:99:MET:HE2	1:C:99:MET:HB3	1.91	0.41
1:E:235:PRO:HG2	1:E:259:ILE:HD13	2.01	0.41
1:F:150:ASP:OD2	1:F:153:MET:HG3	2.20	0.41
1:H:83:THR:OG1	1:H:84:GLN:N	2.53	0.41
1:E:211:LEU:HD23	1:E:236:LEU:HB3	2.03	0.41
1:B:242:ILE:HG12	1:B:250:MET:HE2	2.01	0.41
1:F:85:ARG:HH21	1:H:272:GLU:CD	2.22	0.41
1:G:369:GLU:O	1:G:373:GLY:HA2	2.20	0.41
1:H:39:GLU:CD	1:H:322:VAL:HG23	2.40	0.41
1:H:200:ILE:HG22	1:H:210:LEU:HD11	2.02	0.41
1:A:184:GLN:HG3	1:A:185:PRO:HD2	2.03	0.41
1:A:194:GLU:HG3	1:A:233:TYR:CE2	2.55	0.41
1:D:287:MET:HB2	1:D:287:MET:HE3	1.89	0.41
1:A:224:LYS:HD2	1:A:256:TYR:CG	2.55	0.41
1:E:120:LYS:HE3	1:E:120:LYS:HB2	1.84	0.41
1:F:378:GLU:HB2	1:F:382:ARG:HH11	1.86	0.41
1:A:49:LEU:HD23	1:A:49:LEU:HA	1.94	0.41
1:A:172:ASP:HB2	1:A:213:GLY:O	2.21	0.41
1:A:266:ARG:O	1:E:85:ARG:HD2	2.20	0.41
1:B:220:VAL:HG11	1:B:252:GLU:HB3	2.02	0.41
1:B:220:VAL:HG21	1:B:249:ASP:HB3	2.03	0.41
1:D:181:ASP:HB3	1:D:182:GLY:HA2	2.03	0.41
1:D:333:SER:HA	1:D:334:PRO:HD2	1.82	0.41
1:A:102:TRP:CH2	1:A:117:LEU:HD21	2.56	0.41
1:A:271:TYR:O	1:A:274:SER:HB3	2.21	0.41

Continued on next page...

Continued from previous page...

Atom-1	Atom-2	Interatomic distance (Å)	Clash overlap (Å)
1:C:62:PHE:CE2	1:C:73:LEU:HD13	2.56	0.41
1:C:358:ARG:HG2	1:C:365:ILE:HB	2.03	0.41
1:H:185:PRO:HB3	1:H:218:PHE:CE1	2.56	0.41
1:D:8:THR:HG22	1:D:26:VAL:HG12	2.03	0.40
1:E:87:ASP:O	1:E:91:MET:HB2	2.21	0.40
1:G:170:LYS:HB2	1:G:211:LEU:HB2	2.03	0.40
1:B:114:TYR:HB2	1:B:332:CYS:HB3	2.04	0.40
1:D:210:LEU:C	1:D:211:LEU:HD23	2.42	0.40
1:E:301:ILE:HA	1:E:304:MET:HE3	2.03	0.40
1:G:40:ILE:HD13	1:G:93:VAL:HG22	2.03	0.40
1:G:333:SER:HA	1:G:334:PRO:HD2	1.86	0.40
1:A:126:ARG:HA	1:A:363:TYR:CD2	2.57	0.40
1:D:38:GLY:HA2	1:D:99:MET:CE	2.49	0.40
1:H:174:ALA:HB1	1:H:218:PHE:HZ	1.86	0.40
1:A:200:ILE:O	1:A:204:VAL:HG22	2.22	0.40
1:D:200:ILE:HG22	1:D:210:LEU:HD11	2.02	0.40
1:E:275:ARG:O	1:E:279:THR:OG1	2.35	0.40
1:G:87:ASP:O	1:G:91:MET:HB2	2.21	0.40
1:A:211:LEU:HD13	1:A:237:TRP:CZ2	2.56	0.40
1:C:13:ASN:HA	1:C:14:PRO:HD2	1.91	0.40

There are no symmetry-related clashes.

5.3 Torsion angles (i)

5.3.1 Protein backbone (i)

In the following table, the Percentiles column shows the percent Ramachandran outliers of the chain as a percentile score with respect to all X-ray entries followed by that with respect to entries of similar resolution.

The Analysed column shows the number of residues for which the backbone conformation was analysed, and the total number of residues.

Mol	Chain	Analysed	Favoured	Allowed	Outliers	Percentiles	
1	A	388/404 (96%)	372 (96%)	16 (4%)	0	100	100
1	B	384/404 (95%)	360 (94%)	22 (6%)	2 (0%)	29	61
1	C	382/404 (95%)	359 (94%)	22 (6%)	1 (0%)	41	71
1	D	384/404 (95%)	355 (92%)	26 (7%)	3 (1%)	19	51

Continued on next page...

Continued from previous page...

Mol	Chain	Analysed	Favoured	Allowed	Outliers	Percentiles	
1	E	365/404 (90%)	339 (93%)	26 (7%)	0	100	100
1	F	380/404 (94%)	359 (94%)	19 (5%)	2 (0%)	29	61
1	G	364/404 (90%)	341 (94%)	22 (6%)	1 (0%)	41	71
1	H	365/404 (90%)	345 (94%)	19 (5%)	1 (0%)	41	71
All	All	3012/3232 (93%)	2830 (94%)	172 (6%)	10 (0%)	41	71

All (10) Ramachandran outliers are listed below:

Mol	Chain	Res	Type
1	H	269	THR
1	C	69	HIS
1	B	133	PRO
1	D	392	HIS
1	F	144	LYS
1	D	269	THR
1	F	269	THR
1	G	354	THR
1	B	318	CYS
1	D	133	PRO

5.3.2 Protein sidechains (i)

In the following table, the Percentiles column shows the percent sidechain outliers of the chain as a percentile score with respect to all X-ray entries followed by that with respect to entries of similar resolution.

The Analysed column shows the number of residues for which the sidechain conformation was analysed, and the total number of residues.

Mol	Chain	Analysed	Rotameric	Outliers	Percentiles	
1	A	311/322 (97%)	294 (94%)	17 (6%)	21	53
1	B	308/322 (96%)	301 (98%)	7 (2%)	50	80
1	C	306/322 (95%)	287 (94%)	19 (6%)	18	47
1	D	308/322 (96%)	288 (94%)	20 (6%)	17	45
1	E	293/322 (91%)	273 (93%)	20 (7%)	16	42
1	F	306/322 (95%)	291 (95%)	15 (5%)	25	57
1	G	292/322 (91%)	280 (96%)	12 (4%)	30	64
1	H	293/322 (91%)	277 (94%)	16 (6%)	21	53

Continued on next page...

Continued from previous page...

Mol	Chain	Analysed	Rotameric	Outliers	Percentiles
All	All	2417/2576 (94%)	2291 (95%)	126 (5%)	23 55

All (126) residues with a non-rotameric sidechain are listed below:

Mol	Chain	Res	Type
1	A	4	SER
1	A	27	LYS
1	A	60	ARG
1	A	83	THR
1	A	85	ARG
1	A	98	GLU
1	A	127	SER
1	A	144	LYS
1	A	210	LEU
1	A	214	THR
1	A	238	PHE
1	A	270	LYS
1	A	287	MET
1	A	295	LEU
1	A	309	SER
1	A	354	THR
1	A	393	LEU
1	B	2	ARG
1	B	283	SER
1	B	292	VAL
1	B	309	SER
1	B	318	CYS
1	B	367	SER
1	B	368	GLN
1	C	2	ARG
1	C	4	SER
1	C	49	LEU
1	C	83	THR
1	C	88	VAL
1	C	98	GLU
1	C	127	SER
1	C	196	PHE
1	C	211	LEU
1	C	214	THR
1	C	252	GLU
1	C	270	LYS
1	C	283	SER

Continued on next page...

Continued from previous page...

Mol	Chain	Res	Type
1	C	287	MET
1	C	289	LEU
1	C	309	SER
1	C	358	ARG
1	C	387	THR
1	C	393	LEU
1	D	1	MET
1	D	5	ASP
1	D	52	LYS
1	D	83	THR
1	D	85	ARG
1	D	91	MET
1	D	127	SER
1	D	130	TYR
1	D	134	THR
1	D	144	LYS
1	D	214	THR
1	D	237	TRP
1	D	238	PHE
1	D	252	GLU
1	D	287	MET
1	D	289	LEU
1	D	344	THR
1	D	354	THR
1	D	367	SER
1	D	387	THR
1	E	41	TYR
1	E	44	THR
1	E	49	LEU
1	E	69	HIS
1	E	98	GLU
1	E	178	THR
1	E	191	GLU
1	E	237	TRP
1	E	238	PHE
1	E	263	THR
1	E	270	LYS
1	E	279	THR
1	E	287	MET
1	E	299	LYS
1	E	309	SER
1	E	341	SER

Continued on next page...

Continued from previous page...

Mol	Chain	Res	Type
1	E	354	THR
1	E	367	SER
1	E	368	GLN
1	E	387	THR
1	F	2	ARG
1	F	8	THR
1	F	29	VAL
1	F	44	THR
1	F	84	GLN
1	F	98	GLU
1	F	127	SER
1	F	211	LEU
1	F	214	THR
1	F	237	TRP
1	F	287	MET
1	F	289	LEU
1	F	309	SER
1	F	318	CYS
1	F	344	THR
1	G	4	SER
1	G	32	CYS
1	G	44	THR
1	G	88	VAL
1	G	98	GLU
1	G	188	GLU
1	G	214	THR
1	G	237	TRP
1	G	252	GLU
1	G	287	MET
1	G	309	SER
1	G	321	LEU
1	H	42	ASN
1	H	44	THR
1	H	48	ASP
1	H	84	GLN
1	H	88	VAL
1	H	98	GLU
1	H	130	TYR
1	H	209	ASP
1	H	237	TRP
1	H	292	VAL
1	H	299	LYS

Continued on next page...

Continued from previous page...

Mol	Chain	Res	Type
1	H	309	SER
1	H	318	CYS
1	H	321	LEU
1	H	358	ARG
1	H	361	ASN

Sometimes sidechains can be flipped to improve hydrogen bonding and reduce clashes. All (4) such sidechains are listed below:

Mol	Chain	Res	Type
1	A	368	GLN
1	D	311	GLN
1	F	184	GLN
1	H	384	ASN

5.3.3 RNA (i)

There are no RNA molecules in this entry.

5.4 Non-standard residues in protein, DNA, RNA chains (i)

There are no non-standard protein/DNA/RNA residues in this entry.

5.5 Carbohydrates (i)

There are no monosaccharides in this entry.

5.6 Ligand geometry (i)

Of 8 ligands modelled in this entry, 8 are monoatomic - leaving 0 for Mogul analysis.

There are no bond length outliers.

There are no bond angle outliers.

There are no chirality outliers.

There are no torsion outliers.

There are no ring outliers.

No monomer is involved in short contacts.

5.7 Other polymers (i)

There are no such residues in this entry.

5.8 Polymer linkage issues (i)

There are no chain breaks in this entry.

6 Fit of model and data (i)

6.1 Protein, DNA and RNA chains (i)

In the following table, the column labelled '#RSRZ> 2' contains the number (and percentage) of RSRZ outliers, followed by percent RSRZ outliers for the chain as percentile scores relative to all X-ray entries and entries of similar resolution. The OWAB column contains the minimum, median, 95th percentile and maximum values of the occupancy-weighted average B-factor per residue. The column labelled 'Q< 0.9' lists the number of (and percentage) of residues with an average occupancy less than 0.9.

Mol	Chain	Analysed	<RSRZ>	#RSRZ>2			OWAB(Å^2)	Q<0.9
1	A	392/404 (97%)	-0.53	1 (0%)	94	94	23, 42, 64, 97	0
1	B	387/404 (95%)	-0.46	2 (0%)	91	91	24, 45, 80, 113	0
1	C	386/404 (95%)	-0.51	4 (1%)	82	82	30, 49, 80, 127	0
1	D	388/404 (96%)	-0.50	0	100	100	25, 52, 74, 101	0
1	E	371/404 (91%)	-0.50	1 (0%)	94	94	24, 44, 78, 117	0
1	F	386/404 (95%)	-0.21	4 (1%)	82	82	34, 64, 94, 116	0
1	G	370/404 (91%)	-0.10	13 (3%)	44	38	35, 66, 97, 119	0
1	H	371/404 (91%)	-0.07	17 (4%)	32	29	37, 68, 104, 119	0
All	All	3051/3232 (94%)	-0.36	42 (1%)	75	75	23, 53, 91, 127	0

All (42) RSRZ outliers are listed below:

Mol	Chain	Res	Type	RSRZ
1	C	390	ASP	4.1
1	H	16	PRO	4.0
1	H	349	PHE	3.9
1	H	15	PRO	3.7
1	G	16	PRO	3.3
1	F	145	PRO	3.2
1	G	148	TYR	3.1
1	B	393	LEU	3.0
1	B	388	GLY	3.0
1	G	32	CYS	2.9
1	G	147	VAL	2.9
1	E	32	CYS	2.8
1	H	383	ALA	2.7
1	H	348	PHE	2.7
1	G	349	PHE	2.6
1	F	354	THR	2.6

Continued on next page...

Continued from previous page...

Mol	Chain	Res	Type	RSRZ
1	F	33	GLY	2.5
1	A	151	ALA	2.5
1	G	132	TYR	2.5
1	H	14	PRO	2.4
1	G	156	GLU	2.3
1	C	2	ARG	2.3
1	H	352	LEU	2.3
1	H	351	GLU	2.3
1	G	2	ARG	2.2
1	F	35	THR	2.2
1	H	37	TYR	2.2
1	H	384	ASN	2.1
1	H	19	GLY	2.1
1	G	380	VAL	2.1
1	H	6	ILE	2.1
1	C	397	GLU	2.1
1	H	18	HIS	2.1
1	H	9	PHE	2.1
1	G	108	ALA	2.1
1	C	389	SER	2.1
1	G	204	VAL	2.1
1	G	3	LEU	2.0
1	H	21	ARG	2.0
1	H	381	ALA	2.0
1	G	348	PHE	2.0
1	H	357	ILE	2.0

6.2 Non-standard residues in protein, DNA, RNA chains (i)

There are no non-standard protein/DNA/RNA residues in this entry.

6.3 Carbohydrates (i)

There are no monosaccharides in this entry.

6.4 Ligands (i)

In the following table, the Atoms column lists the number of modelled atoms in the group and the number defined in the chemical component dictionary. The B-factors column lists the minimum, median, 95th percentile and maximum values of B factors of atoms in the group. The column labelled 'Q< 0.9' lists the number of atoms with occupancy less than 0.9.

Mol	Type	Chain	Res	Atoms	RSCC	RSR	B-factors(Å^2)	Q<0.9
2	MG	B	501	1/1	0.92	0.26	69,69,69,69	0
2	MG	G	501	1/1	0.92	0.23	93,93,93,93	0
2	MG	D	501	1/1	0.93	0.34	68,68,68,68	0
2	MG	E	501	1/1	0.95	0.34	90,90,90,90	0
2	MG	A	501	1/1	0.96	0.32	73,73,73,73	0
2	MG	H	501	1/1	0.96	0.17	75,75,75,75	0
2	MG	C	501	1/1	0.97	0.35	67,67,67,67	0
2	MG	F	501	1/1	0.97	0.24	83,83,83,83	0

6.5 Other polymers (i)

There are no such residues in this entry.