wwPDB X-ray Structure Validation Summary Report (i)

Oct 16, 2023 – 01:41 PM EDT

PDB ID	:	2DV6
Title	:	Crystal structure of nitrite reductase from Hyphomicrobium denitrificans
Authors	:	Nojiri, M.; Xie, Y.; Yamamoto, T.; Inoue, T.; Suzuki, S.; Kai, Y.
Deposited on	:	2006-07-28
Resolution	:	2.20 Å(reported)

This is a wwPDB X-ray Structure Validation Summary Report for a publicly released PDB entry.

We welcome your comments at *validation@mail.wwpdb.org*
A user guide is available at
https://www.wwpdb.org/validation/2017/XrayValidationReportHelp
with specific help available everywhere you see the (i) symbol.

The types of validation reports are described at
http://www.wwpdb.org/validation/2017/FAQs#types.

The following versions of software and data (see references (1)) were used in the production of this report:

MolProbity	:	4.02b-467
Xtriage (Phenix)	:	1.13
EDS	:	2.36
Percentile statistics	:	20191225.v01 (using entries in the PDB archive December 25th 2019)
Refmac	:	5.8.0158
CCP4	:	7.0.044 (Gargrove)
Ideal geometry (proteins)	:	Engh & Huber (2001)
Ideal geometry (DNA, RNA)	:	Parkinson et al. (1996)
Validation Pipeline (wwPDB-VP)	:	2.36

1 Overall quality at a glance (i)

The following experimental techniques were used to determine the structure:
X-RAY DIFFRACTION

The reported resolution of this entry is 2.20 Å.

Percentile scores (ranging between 0-100) for global validation metrics of the entry are shown in the following graphic. The table shows the number of entries on which the scores are based.

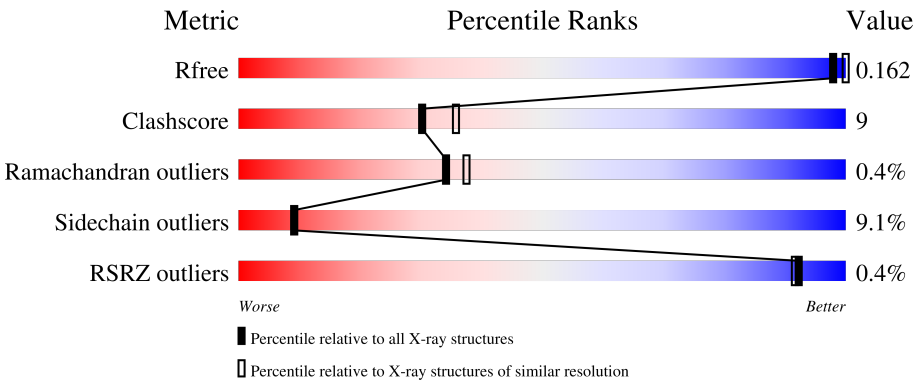

Metric	Whole archive (#Entries)	Similar resolution (#Entries, resolution range(Å))
R_{free}	130704	4898 (2.20-2.20)
Clashscore	141614	5594 (2.20-2.20)
Ramachandran outliers	138981	5503 (2.20-2.20)
Sidechain outliers	138945	5504 (2.20-2.20)
RSRZ outliers	127900	4800 (2.20-2.20)

The table below summarises the geometric issues observed across the polymeric chains and their fit to the electron density. The red, orange, yellow and green segments of the lower bar indicate the fraction of residues that contain outliers for >=3, 2, 1 and 0 types of geometric quality criteria respectively. A grey segment represents the fraction of residues that are not modelled. The numeric value for each fraction is indicated below the corresponding segment, with a dot representing fractions <=5% The upper red bar (where present) indicates the fraction of residues that have poor fit to the electron density. The numeric value is given above the bar.

Mol	Chain	Length	Quality of chain
1	A	447	76% 13% • • 6%
1	B	447	% 73% 17% • • 6%
1	C	447	73% 17% • • 6%
1	D	447	78% 12% • 6%
1	E	447	75% 15% • • 6%

Continued on next page...

Continued from previous page...

Mol	Chain	Length	Quality of chain
1	F	447	74% 15% • • 6%

2 Entry composition (i)

There are 4 unique types of molecules in this entry. The entry contains 21087 atoms, of which 0 are hydrogens and 0 are deuteriums.

In the tables below, the ZeroOcc column contains the number of atoms modelled with zero occupancy, the AltConf column contains the number of residues with at least one atom in alternate conformation and the Trace column contains the number of residues modelled with at most 2 atoms.

- Molecule 1 is a protein called Nitrite reductase.

Mol	Chain	Residues	Atoms					ZeroOcc	AltConf	Trace
			Total	C	N	O	S			
1	A	422	3210	2037	549	614	10	0	0	0
1	B	422	3210	2037	549	614	10	0	0	0
1	C	422	3210	2037	549	614	10	0	0	0
1	D	422	3210	2037	549	614	10	0	0	0
1	E	422	3210	2037	549	614	10	0	0	0
1	F	422	3210	2037	549	614	10	0	0	0

- Molecule 2 is COPPER (II) ION (three-letter code: CU) (formula: Cu).

Mol	Chain	Residues	Atoms		ZeroOcc	AltConf
			Total	Cu		
2	A	3	3	3	0	0
2	B	3	3	3	0	0
2	C	3	3	3	0	0
2	D	3	3	3	0	0
2	E	3	3	3	0	0
2	F	3	3	3	0	0

- Molecule 3 is POTASSIUM ION (three-letter code: K) (formula: K).

Mol	Chain	Residues	Atoms	ZeroOcc	AltConf
3	A	1	Total K 1 1	0	0
3	B	1	Total K 1 1	0	0
3	C	1	Total K 1 1	0	0
3	D	1	Total K 1 1	0	0
3	E	1	Total K 1 1	0	0
3	F	1	Total K 1 1	0	0

- Molecule 4 is water.

Mol	Chain	Residues	Atoms	ZeroOcc	AltConf
4	A	288	Total O 289 289	0	1
4	B	272	Total O 272 272	0	0
4	C	284	Total O 284 284	0	0
4	D	302	Total O 302 302	0	0
4	E	321	Total O 322 322	0	1
4	F	333	Total O 334 334	0	1

3 Residue-property plots (i)

These plots are drawn for all protein, RNA, DNA and oligosaccharide chains in the entry. The first graphic for a chain summarises the proportions of the various outlier classes displayed in the second graphic. The second graphic shows the sequence view annotated by issues in geometry and electron density. Residues are color-coded according to the number of geometric quality criteria for which they contain at least one outlier: green = 0, yellow = 1, orange = 2 and red = 3 or more. A red dot above a residue indicates a poor fit to the electron density (RSRZ > 2). Stretches of 2 or more consecutive residues without any outlier are shown as a green connector. Residues present in the sample, but not in the model, are shown in grey.

• Molecule 1: Nitrite reductase

Chain A:

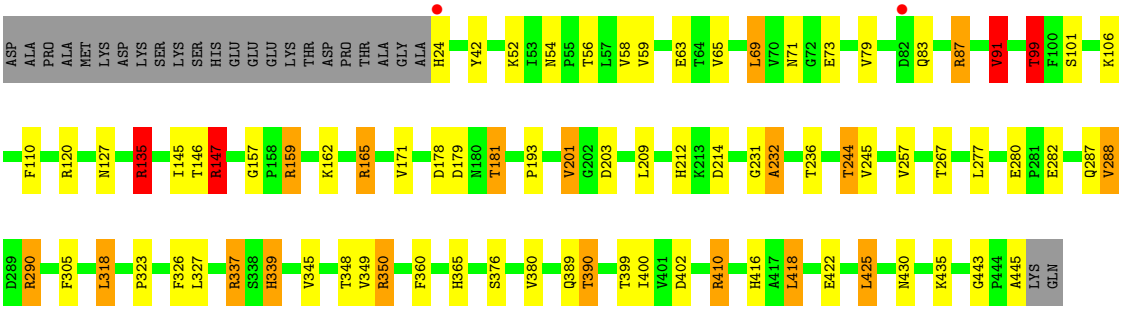

• Molecule 1: Nitrite reductase

Chain B:

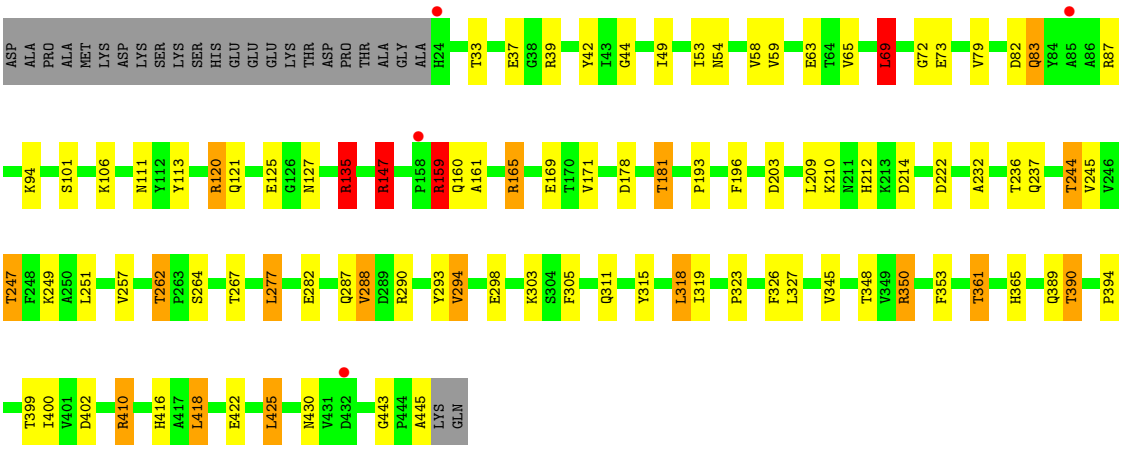

• Molecule 1: Nitrite reductase

Chain C:

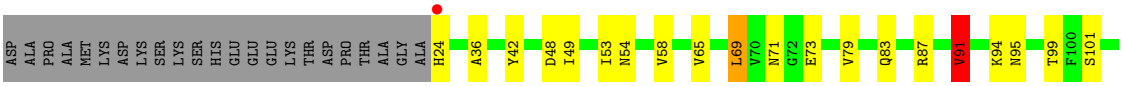

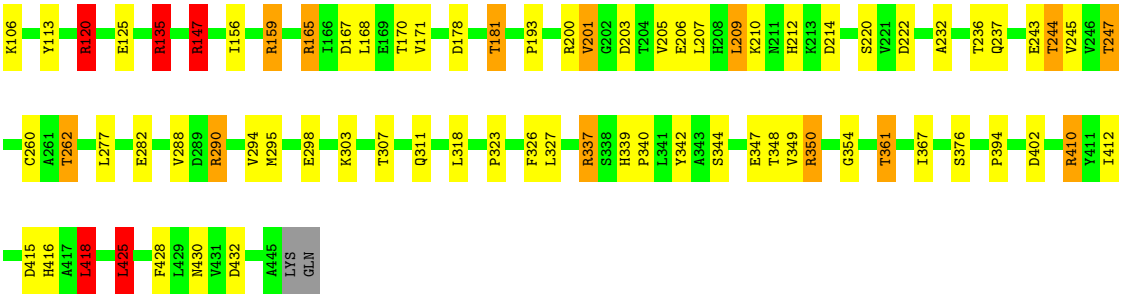

- Molecule 1: Nitrite reductase

Chain D:

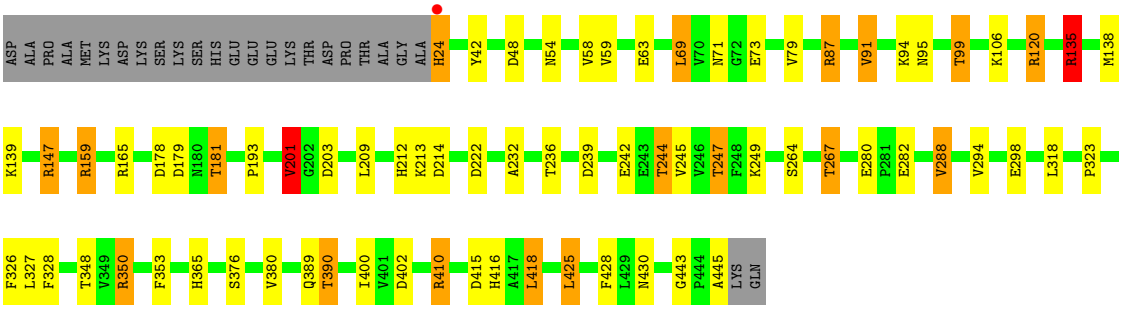

- Molecule 1: Nitrite reductase

Chain E:

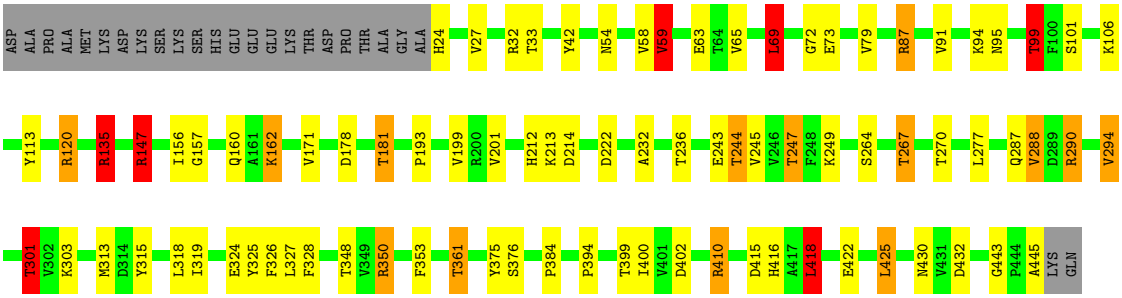

- Molecule 1: Nitrite reductase

Chain F:

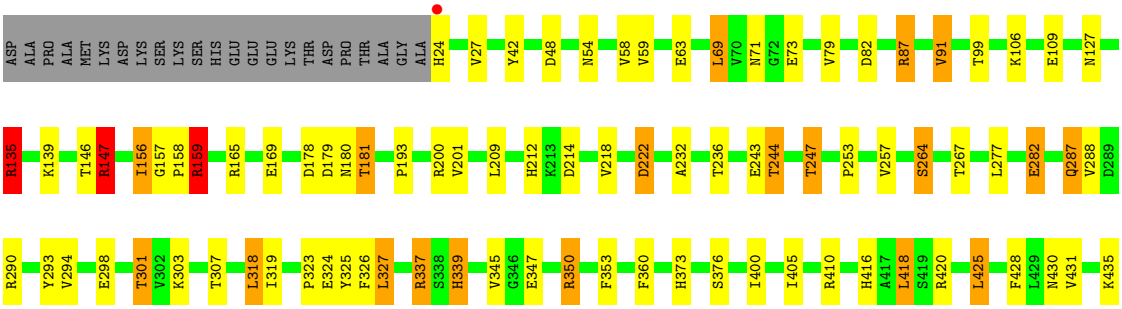

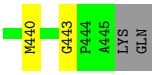
M440
G443
P444
A445
LYS
GLN

4 Data and refinement statistics (i)

Property	Value	Source
Space group	P 41	Depositor
Cell constants a, b, c, α, β, γ	162.55Å 162.55Å 148.97Å 90.00° 90.00° 90.00°	Depositor
Resolution (Å)	8.00 – 2.20 48.59 – 2.20	Depositor EDS
% Data completeness (in resolution range)	99.8 (8.00-2.20) 94.9 (48.59-2.20)	Depositor EDS
R_{merge}	(Not available)	Depositor
R_{sym}	(Not available)	Depositor
$< I/\sigma(I) >$ [1]	2.84 (at 2.20Å)	Xtriage
Refinement program	REFMAC 5.2.0005	Depositor
R, R_{free}	0.152 , 0.165 0.154 , 0.162	Depositor DCC
R_{free} test set	18421 reflections (9.94%)	wwPDB-VP
Wilson B-factor (Å^2)	25.6	Xtriage
Anisotropy	0.088	Xtriage
Bulk solvent k_{sol}(e/Å^3), B_{sol}(Å^2)	0.33 , 39.7	EDS
L-test for twinning[2]	$< \|L\| > = 0.49$, $< L^2 > = 0.33$	Xtriage
Estimated twinning fraction	0.022 for h,-k,-l	Xtriage
F_o,F_c correlation	0.96	EDS
Total number of atoms	21087	wwPDB-VP
Average B, all atoms (Å^2)	28.0	wwPDB-VP

Xtriage's analysis on translational NCS is as follows: *The largest off-origin peak in the Patterson function is 3.02% of the height of the origin peak. No significant pseudotranslation is detected.*

[1]Intensities estimated from amplitudes.

[2]Theoretical values of $< |L| >$, $< L^2 >$ for acentric reflections are 0.5, 0.333 respectively for untwinned datasets, and 0.375, 0.2 for perfectly twinned datasets.

5 Model quality (i)

5.1 Standard geometry (i)

Bond lengths and bond angles in the following residue types are not validated in this section: CU, K

The Z score for a bond length (or angle) is the number of standard deviations the observed value is removed from the expected value. A bond length (or angle) with $|Z| > 5$ is considered an outlier worth inspection. RMSZ is the root-mean-square of all Z scores of the bond lengths (or angles).

Mol	Chain	Bond lengths		Bond angles	
		RMSZ	$\#\|Z\|>5$	RMSZ	$\#\|Z\|>5$
1	A	0.82	0/3289	0.97	16/4476 (0.4%)
1	B	0.80	0/3289	0.91	14/4476 (0.3%)
1	C	0.83	0/3289	0.97	19/4476 (0.4%)
1	D	0.84	0/3289	0.95	14/4476 (0.3%)
1	E	0.83	0/3289	0.98	17/4476 (0.4%)
1	F	0.84	0/3289	0.98	15/4476 (0.3%)
All	All	0.83	0/19734	0.96	95/26856 (0.4%)

There are no bond length outliers.

The worst 5 of 95 bond angle outliers are listed below:

Mol	Chain	Res	Type	Atoms	Z	Observed(^{o})	Ideal(^{o})
1	D	159	ARG	NE-CZ-NH2	-13.00	113.80	120.30
1	F	147	ARG	NE-CZ-NH2	-11.53	114.53	120.30
1	F	135	ARG	NE-CZ-NH2	-11.42	114.59	120.30
1	F	159	ARG	NE-CZ-NH2	-10.18	115.21	120.30
1	E	135	ARG	NE-CZ-NH2	-9.67	115.47	120.30

There are no chirality outliers.

There are no planarity outliers.

5.2 Too-close contacts (i)

In the following table, the Non-H and H(model) columns list the number of non-hydrogen atoms and hydrogen atoms in the chain respectively. The H(added) column lists the number of hydrogen atoms added and optimized by MolProbity. The Clashes column lists the number of clashes within the asymmetric unit, whereas Symm-Clashes lists symmetry-related clashes.

Mol	Chain	Non-H	H(model)	H(added)	Clashes	Symm-Clashes
1	A	3210	0	3124	53	0
1	B	3210	0	3124	67	0
1	C	3210	0	3124	66	0
1	D	3210	0	3124	55	0
1	E	3210	0	3124	70	0
1	F	3210	0	3124	68	0
2	A	3	0	0	0	0
2	B	3	0	0	0	0
2	C	3	0	0	0	0
2	D	3	0	0	0	0
2	E	3	0	0	0	0
2	F	3	0	0	0	0
3	A	1	0	0	0	0
3	B	1	0	0	0	0
3	C	1	0	0	0	0
3	D	1	0	0	0	0
3	E	1	0	0	0	0
3	F	1	0	0	0	0
4	A	289	0	0	5	0
4	B	272	0	0	7	0
4	C	284	0	0	5	0
4	D	302	0	0	5	0
4	E	322	0	0	8	0
4	F	334	0	0	10	0
All	All	21087	0	18744	352	0

The all-atom clashscore is defined as the number of clashes found per 1000 atoms (including hydrogen atoms). The all-atom clashscore for this structure is 9.

The worst 5 of 352 close contacts within the same asymmetric unit are listed below, sorted by their clash magnitude.

Atom-1	Atom-2	Interatomic distance (Å)	Clash overlap (Å)
1:C:337:ARG:HG2	1:C:337:ARG:HH21	1.21	1.02
1:F:337:ARG:HG2	1:F:337:ARG:HH21	1.23	1.01
1:A:337:ARG:HH21	1:A:337:ARG:HG2	1.33	0.93
1:B:389:GLN:HG3	1:B:390:THR:HG23	1.53	0.90
1:B:120:ARG:HD2	1:B:125:GLU:OE1	1.70	0.90

There are no symmetry-related clashes.

5.3 Torsion angles (i)

5.3.1 Protein backbone (i)

In the following table, the Percentiles column shows the percent Ramachandran outliers of the chain as a percentile score with respect to all X-ray entries followed by that with respect to entries of similar resolution.

The Analysed column shows the number of residues for which the backbone conformation was analysed, and the total number of residues.

Mol	Chain	Analysed	Favoured	Allowed	Outliers	Percentiles	
1	A	420/447 (94%)	413 (98%)	5 (1%)	2 (0%)	29	31
1	B	420/447 (94%)	407 (97%)	11 (3%)	2 (0%)	29	31
1	C	420/447 (94%)	412 (98%)	6 (1%)	2 (0%)	29	31
1	D	420/447 (94%)	409 (97%)	10 (2%)	1 (0%)	47	55
1	E	420/447 (94%)	412 (98%)	7 (2%)	1 (0%)	47	55
1	F	420/447 (94%)	410 (98%)	7 (2%)	3 (1%)	22	22
All	All	2520/2682 (94%)	2463 (98%)	46 (2%)	11 (0%)	34	37

5 of 11 Ramachandran outliers are listed below:

Mol	Chain	Res	Type
1	F	159	ARG
1	A	232	ALA
1	A	157	GLY
1	B	83	GLN
1	B	232	ALA

5.3.2 Protein sidechains (i)

In the following table, the Percentiles column shows the percent sidechain outliers of the chain as a percentile score with respect to all X-ray entries followed by that with respect to entries of similar resolution.

The Analysed column shows the number of residues for which the sidechain conformation was analysed, and the total number of residues.

Mol	Chain	Analysed	Rotameric	Outliers	Percentiles	
1	A	347/367 (95%)	312 (90%)	35 (10%)	7	7
1	B	347/367 (95%)	316 (91%)	31 (9%)	9	9
1	C	347/367 (95%)	316 (91%)	31 (9%)	9	9

Continued on next page...

Continued from previous page...

Mol	Chain	Analysed	Rotameric	Outliers	Percentiles	
1	D	347/367 (95%)	319 (92%)	28 (8%)	11	12
1	E	347/367 (95%)	315 (91%)	32 (9%)	9	9
1	F	347/367 (95%)	315 (91%)	32 (9%)	9	9
All	All	2082/2202 (95%)	1893 (91%)	189 (9%)	9	9

5 of 189 residues with a non-rotameric sidechain are listed below:

Mol	Chain	Res	Type
1	D	288	VAL
1	E	287	GLN
1	D	376	SER
1	E	99	THR
1	E	361	THR

Sometimes sidechains can be flipped to improve hydrogen bonding and reduce clashes. 5 of 40 such sidechains are listed below:

Mol	Chain	Res	Type
1	E	54	ASN
1	F	160	GLN
1	E	111	ASN
1	F	54	ASN
1	F	212	HIS

5.3.3 RNA (i)

There are no RNA molecules in this entry.

5.4 Non-standard residues in protein, DNA, RNA chains (i)

There are no non-standard protein/DNA/RNA residues in this entry.

5.5 Carbohydrates (i)

There are no monosaccharides in this entry.

5.6 Ligand geometry (i)

Of 24 ligands modelled in this entry, 24 are monoatomic - leaving 0 for Mogul analysis.

There are no bond length outliers.

There are no bond angle outliers.

There are no chirality outliers.

There are no torsion outliers.

There are no ring outliers.

No monomer is involved in short contacts.

5.7 Other polymers (i)

There are no such residues in this entry.

5.8 Polymer linkage issues (i)

There are no chain breaks in this entry.

6 Fit of model and data (i)

6.1 Protein, DNA and RNA chains (i)

In the following table, the column labelled '#RSRZ> 2' contains the number (and percentage) of RSRZ outliers, followed by percent RSRZ outliers for the chain as percentile scores relative to all X-ray entries and entries of similar resolution. The OWAB column contains the minimum, median, 95th percentile and maximum values of the occupancy-weighted average B-factor per residue. The column labelled 'Q< 0.9' lists the number of (and percentage) of residues with an average occupancy less than 0.9.

Mol	Chain	Analysed	<RSRZ>	#RSRZ>2			OWAB(Å^2)	Q<0.9
1	A	422/447 (94%)	-0.67	2 (0%)	91	90	17, 26, 39, 59	0
1	B	422/447 (94%)	-0.74	4 (0%)	84	83	17, 27, 43, 59	0
1	C	422/447 (94%)	-0.70	1 (0%)	95	94	17, 27, 42, 58	0
1	D	422/447 (94%)	-0.70	1 (0%)	95	94	16, 26, 39, 60	0
1	E	422/447 (94%)	-0.77	0	100	100	17, 26, 38, 61	0
1	F	422/447 (94%)	-0.69	1 (0%)	95	94	16, 25, 38, 61	0
All	All	2532/2682 (94%)	-0.71	9 (0%)	92	91	16, 26, 40, 61	0

The worst 5 of 9 RSRZ outliers are listed below:

Mol	Chain	Res	Type	RSRZ
1	A	24	HIS	5.2
1	D	24	HIS	3.8
1	B	85	ALA	3.0
1	C	24	HIS	2.7
1	F	24	HIS	2.6

6.2 Non-standard residues in protein, DNA, RNA chains (i)

There are no non-standard protein/DNA/RNA residues in this entry.

6.3 Carbohydrates (i)

There are no monosaccharides in this entry.

6.4 Ligands (i)

In the following table, the Atoms column lists the number of modelled atoms in the group and the number defined in the chemical component dictionary. The B-factors column lists the minimum, median, 95th percentile and maximum values of B factors of atoms in the group. The column labelled 'Q< 0.9' lists the number of atoms with occupancy less than 0.9.

Mol	Type	Chain	Res	Atoms	RSCC	RSR	B-factors(Å^2)	Q<0.9
2	CU	C	501	1/1	0.98	0.11	31,31,31,31	0
2	CU	B	501	1/1	0.99	0.07	29,29,29,29	0
2	CU	B	502	1/1	0.99	0.06	27,27,27,27	0
2	CU	A	501	1/1	0.99	0.09	28,28,28,28	0
2	CU	D	501	1/1	0.99	0.10	29,29,29,29	0
2	CU	E	501	1/1	0.99	0.08	28,28,28,28	0
2	CU	F	501	1/1	0.99	0.07	28,28,28,28	0
2	CU	F	502	1/1	0.99	0.04	26,26,26,26	0
3	K	A	2503	1/1	0.99	0.05	30,30,30,30	0
3	K	B	3503	1/1	0.99	0.04	33,33,33,33	0
3	K	C	4503	1/1	0.99	0.03	26,26,26,26	0
3	K	E	6503	1/1	0.99	0.04	25,25,25,25	0
2	CU	E	500	1/1	1.00	0.06	22,22,22,22	0
2	CU	A	502	1/1	1.00	0.04	25,25,25,25	0
2	CU	E	502	1/1	1.00	0.05	26,26,26,26	0
2	CU	F	500	1/1	1.00	0.08	23,23,23,23	0
2	CU	C	500	1/1	1.00	0.05	27,27,27,27	0
2	CU	B	500	1/1	1.00	0.09	23,23,23,23	0
2	CU	C	502	1/1	1.00	0.05	27,27,27,27	0
2	CU	D	500	1/1	1.00	0.08	23,23,23,23	0
2	CU	A	500	1/1	1.00	0.08	24,24,24,24	0
3	K	D	5503	1/1	1.00	0.05	27,27,27,27	0
2	CU	D	502	1/1	1.00	0.04	25,25,25,25	0
3	K	F	7503	1/1	1.00	0.03	27,27,27,27	0

6.5 Other polymers (i)

There are no such residues in this entry.