wwPDB X-ray Structure Validation Summary Report (i)

Jun 23, 2024 – 06:43 AM EDT

PDB ID	:	5D0O
Title	:	BamABCDE complex, outer membrane beta barrel assembly machinery entire complex
Authors	:	Gu, Y.; Paterson, N.; Zeng, Y.; Dong, H.; Wang, W.; Dong, C.
Deposited on	:	2015-08-03
Resolution	:	2.90 Å(reported)

This is a wwPDB X-ray Structure Validation Summary Report for a publicly released PDB entry.

We welcome your comments at *validation@mail.wwpdb.org*
A user guide is available at
https://www.wwpdb.org/validation/2017/XrayValidationReportHelp
with specific help available everywhere you see the (i) symbol.

The types of validation reports are described at
http://www.wwpdb.org/validation/2017/FAQs#types.

The following versions of software and data (see references (1)) were used in the production of this report:

MolProbity	:	4.02b-467
Xtriage (Phenix)	:	1.13
EDS	:	2.37.1
Percentile statistics	:	20191225.v01 (using entries in the PDB archive December 25th 2019)
Refmac	:	5.8.0158
CCP4	:	7.0.044 (Gargrove)
Ideal geometry (proteins)	:	Engh & Huber (2001)
Ideal geometry (DNA, RNA)	:	Parkinson et al. (1996)
Validation Pipeline (wwPDB-VP)	:	2.37.1

1 Overall quality at a glance (i)

The following experimental techniques were used to determine the structure:
X-RAY DIFFRACTION

The reported resolution of this entry is 2.90 Å.

Percentile scores (ranging between 0-100) for global validation metrics of the entry are shown in the following graphic. The table shows the number of entries on which the scores are based.

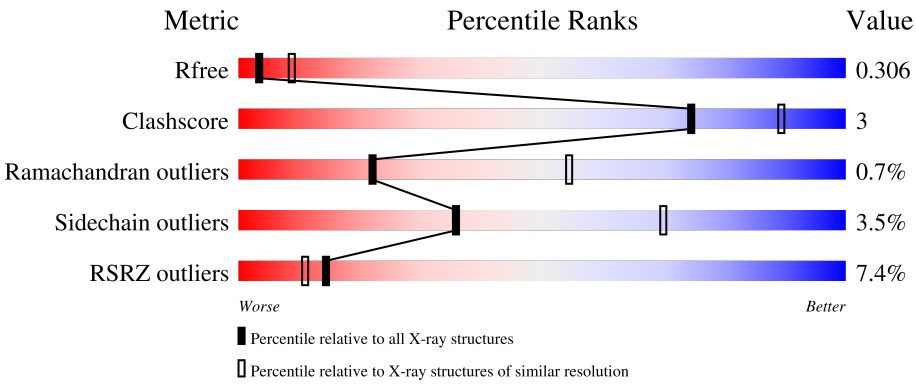

Metric	Whole archive (#Entries)	Similar resolution (#Entries, resolution range(Å))
R_{free}	130704	1957 (2.90-2.90)
Clashscore	141614	2172 (2.90-2.90)
Ramachandran outliers	138981	2115 (2.90-2.90)
Sidechain outliers	138945	2117 (2.90-2.90)
RSRZ outliers	127900	1906 (2.90-2.90)

The table below summarises the geometric issues observed across the polymeric chains and their fit to the electron density. The red, orange, yellow and green segments of the lower bar indicate the fraction of residues that contain outliers for >=3, 2, 1 and 0 types of geometric quality criteria respectively. A grey segment represents the fraction of residues that are not modelled. The numeric value for each fraction is indicated below the corresponding segment, with a dot representing fractions <=5% The upper red bar (where present) indicates the fraction of residues that have poor fit to the electron density. The numeric value is given above the bar.

Mol	Chain	Length	Quality of chain
1	A	810	5%, 88%, 8% • •
2	B	392	11%, 80%, 9% • 10%
3	C	344	3%, 14% •, 84%
4	D	245	2%, 78%, 7%, 15%
5	E	123	7%, 46%, 19% •, 33%

2 Entry composition (i)

There are 5 unique types of molecules in this entry. The entry contains 22815 atoms, of which 11201 are hydrogens and 0 are deuteriums.

In the tables below, the ZeroOcc column contains the number of atoms modelled with zero occupancy, the AltConf column contains the number of residues with at least one atom in alternate conformation and the Trace column contains the number of residues modelled with at most 2 atoms.

- Molecule 1 is a protein called Outer membrane protein assembly factor BamA.

Mol	Chain	Residues	Atoms						ZeroOcc	AltConf	Trace
			Total	C	H	N	O	S			
1	A	786	12142	3919	5928	1047	1232	16	0	0	0

- Molecule 2 is a protein called Outer membrane protein assembly factor BamB.

Mol	Chain	Residues	Atoms						ZeroOcc	AltConf	Trace
			Total	C	H	N	O	S			
2	B	354	5280	1675	2615	457	527	6	0	0	0

- Molecule 3 is a protein called Outer membrane protein assembly factor BamC.

Mol	Chain	Residues	Atoms						ZeroOcc	AltConf	Trace
			Total	C	H	N	O	S			
3	C	56	817	258	409	71	78	1	0	0	0

- Molecule 4 is a protein called Outer membrane protein assembly factor BamD.

Mol	Chain	Residues	Atoms						ZeroOcc	AltConf	Trace
			Total	C	H	N	O	S			
4	D	208	3306	1057	1624	296	322	7	0	0	0

- Molecule 5 is a protein called Outer membrane protein assembly factor BamE.

Mol	Chain	Residues	Atoms						ZeroOcc	AltConf	Trace
			Total	C	H	N	O	S			
5	E	83	1270	405	625	112	126	2	0	0	0

There are 10 discrepancies between the modelled and reference sequences:

Chain	Residue	Modelled	Actual	Comment	Reference
E	114	GLY	-	expression tag	UNP P0A937
E	115	GLY	-	expression tag	UNP P0A937

Continued on next page...

Continued from previous page...

Chain	Residue	Modelled	Actual	Comment	Reference
E	116	HIS	-	expression tag	UNP P0A937
E	117	HIS	-	expression tag	UNP P0A937
E	118	HIS	-	expression tag	UNP P0A937
E	119	HIS	-	expression tag	UNP P0A937
E	120	HIS	-	expression tag	UNP P0A937
E	121	HIS	-	expression tag	UNP P0A937
E	122	HIS	-	expression tag	UNP P0A937
E	123	HIS	-	expression tag	UNP P0A937

3 Residue-property plots (i)

These plots are drawn for all protein, RNA, DNA and oligosaccharide chains in the entry. The first graphic for a chain summarises the proportions of the various outlier classes displayed in the second graphic. The second graphic shows the sequence view annotated by issues in geometry and electron density. Residues are color-coded according to the number of geometric quality criteria for which they contain at least one outlier: green = 0, yellow = 1, orange = 2 and red = 3 or more. A red dot above a residue indicates a poor fit to the electron density (RSRZ > 2). Stretches of 2 or more consecutive residues without any outlier are shown as a green connector. Residues present in the sample, but not in the model, are shown in grey.

• Molecule 1: Outer membrane protein assembly factor BamA

Chain A:

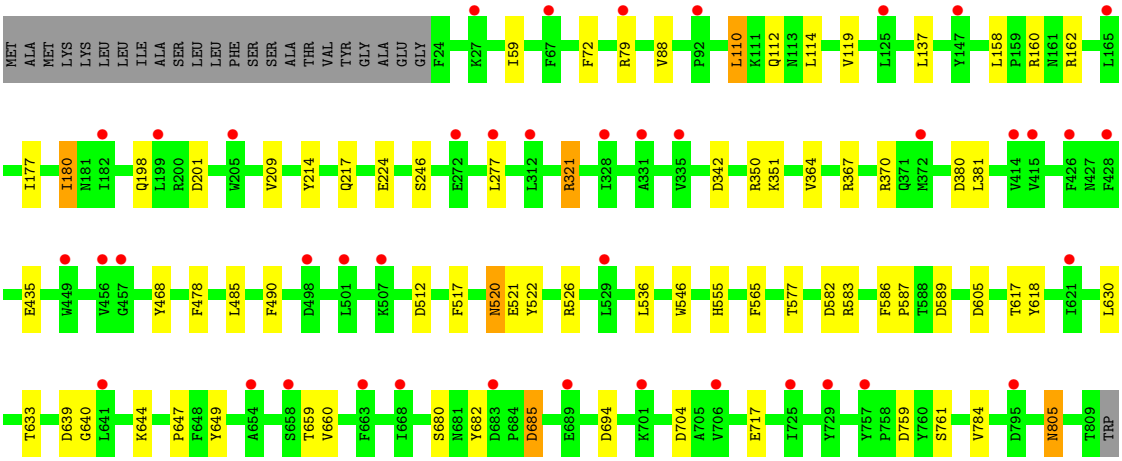

• Molecule 2: Outer membrane protein assembly factor BamB

Chain B:

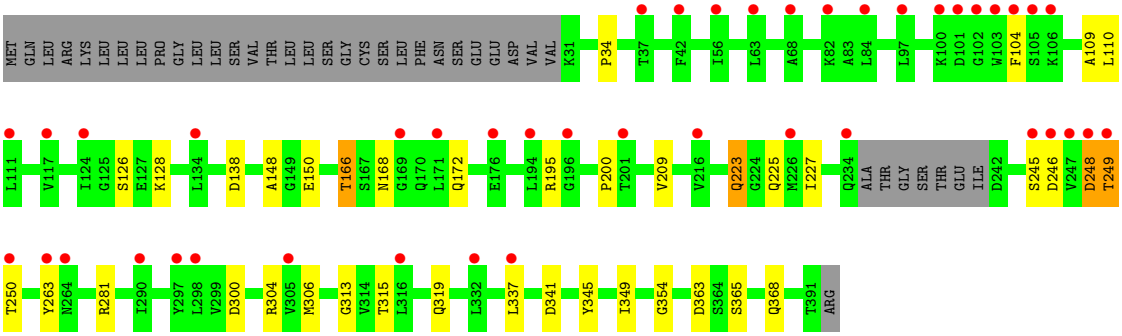

• Molecule 3: Outer membrane protein assembly factor BamC

Chain C:

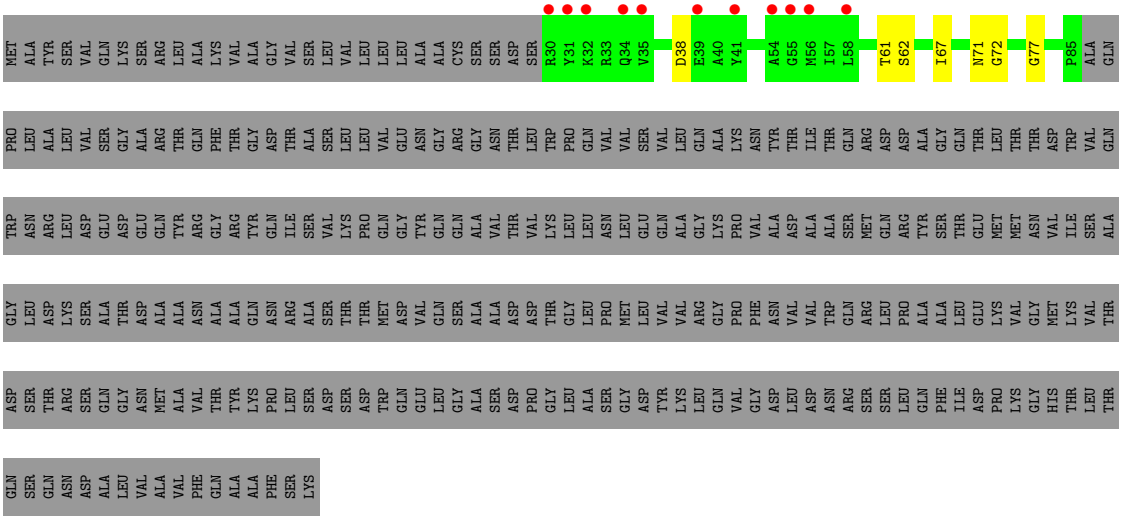

- Molecule 4: Outer membrane protein assembly factor BamD

Chain D:

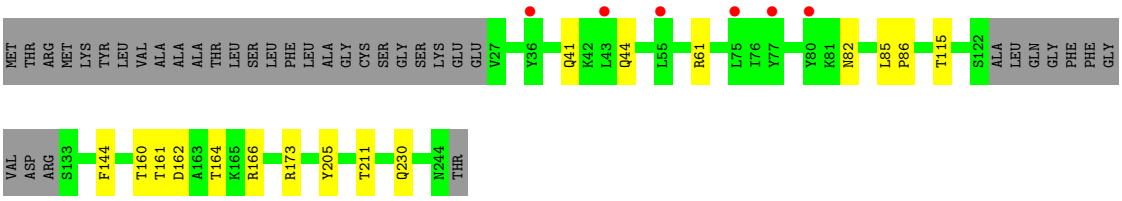

- Molecule 5: Outer membrane protein assembly factor BamE

Chain E:

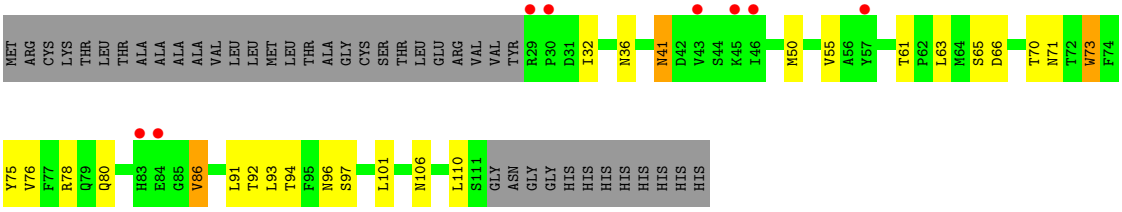

4 Data and refinement statistics (i)

Property	Value	Source
Space group	P 41 21 2	Depositor
Cell constants a, b, c, α, β, γ	116.69Å 116.69Å 435.19Å 90.00° 90.00° 90.00°	Depositor
Resolution (Å)	49.65 – 2.90 49.65 – 2.75	Depositor EDS
% Data completeness (in resolution range)	99.5 (49.65-2.90) 100.0 (49.65-2.75)	Depositor EDS
R_{merge}	0.18	Depositor
R_{sym}	0.02	Depositor
$< I/\sigma(I) >$ [1]	1.16 (at 2.77Å)	Xtriage
Refinement program	PHENIX 1.9_1692	Depositor
R, R_{free}	0.276 , 0.304 0.279 , 0.306	Depositor DCC
R_{free} test set	3845 reflections (4.85%)	wwPDB-VP
Wilson B-factor (Å^2)	84.2	Xtriage
Anisotropy	0.560	Xtriage
Bulk solvent k_{sol}(e/Å^3), B_{sol}(Å^2)	0.33 , 64.4	EDS
L-test for twinning[2]	$< \|L\| > = 0.47$, $< L^2 > = 0.30$	Xtriage
Estimated twinning fraction	No twinning to report.	Xtriage
F_o,F_c correlation	0.91	EDS
Total number of atoms	22815	wwPDB-VP
Average B, all atoms (Å^2)	128.0	wwPDB-VP

Xtriage's analysis on translational NCS is as follows: *The largest off-origin peak in the Patterson function is 2.54% of the height of the origin peak. No significant pseudotranslation is detected.*

[1] Intensities estimated from amplitudes.

[2] Theoretical values of $< |L| >$, $< L^2 >$ for acentric reflections are 0.5, 0.333 respectively for untwinned datasets, and 0.375, 0.2 for perfectly twinned datasets.

5 Model quality (i)

5.1 Standard geometry (i)

The Z score for a bond length (or angle) is the number of standard deviations the observed value is removed from the expected value. A bond length (or angle) with $|Z| > 5$ is considered an outlier worth inspection. RMSZ is the root-mean-square of all Z scores of the bond lengths (or angles).

Mol	Chain	Bond lengths		Bond angles	
		RMSZ	$\#\|Z\| >5$	RMSZ	$\#\|Z\| >5$
1	A	0.24	0/6357	0.44	0/8624
2	B	0.23	0/2714	0.47	0/3700
3	C	0.22	0/417	0.44	0/569
4	D	0.24	0/1719	0.41	0/2336
5	E	0.25	0/659	0.50	0/899
All	All	0.24	0/11866	0.44	0/16128

There are no bond length outliers.

There are no bond angle outliers.

There are no chirality outliers.

There are no planarity outliers.

5.2 Too-close contacts (i)

In the following table, the Non-H and H(model) columns list the number of non-hydrogen atoms and hydrogen atoms in the chain respectively. The H(added) column lists the number of hydrogen atoms added and optimized by MolProbity. The Clashes column lists the number of clashes within the asymmetric unit, whereas Symm-Clashes lists symmetry-related clashes.

Mol	Chain	Non-H	H(model)	H(added)	Clashes	Symm-Clashes
1	A	6214	5928	5928	36	0
2	B	2665	2615	2615	19	0
3	C	408	409	409	3	0
4	D	1682	1624	1624	10	0
5	E	645	625	625	7	0
All	All	11614	11201	11201	72	0

The all-atom clashscore is defined as the number of clashes found per 1000 atoms (including hydrogen atoms). The all-atom clashscore for this structure is 3.

The worst 5 of 72 close contacts within the same asymmetric unit are listed below, sorted by their clash magnitude.

Atom-1	Atom-2	Interatomic distance (Å)	Clash overlap (Å)
1:A:160:ARG:NH1	4:D:61:ARG:O	2.11	0.83
1:A:364:VAL:O	1:A:367:ARG:NH1	2.15	0.79
1:A:217:GLN:N	1:A:217:GLN:OE1	2.25	0.69
1:A:582:ASP:OD2	1:A:589:ASP:N	2.30	0.65
1:A:605:ASP:O	1:A:644:LYS:NZ	2.32	0.62

There are no symmetry-related clashes.

5.3 Torsion angles (i)

5.3.1 Protein backbone (i)

In the following table, the Percentiles column shows the percent Ramachandran outliers of the chain as a percentile score with respect to all X-ray entries followed by that with respect to entries of similar resolution.

The Analysed column shows the number of residues for which the backbone conformation was analysed, and the total number of residues.

Mol	Chain	Analysed	Favoured	Allowed	Outliers	Percentiles	
1	A	784/810 (97%)	736 (94%)	45 (6%)	3 (0%)	34	66
2	B	350/392 (89%)	318 (91%)	28 (8%)	4 (1%)	14	42
3	C	54/344 (16%)	46 (85%)	6 (11%)	2 (4%)	3	13
4	D	204/245 (83%)	196 (96%)	8 (4%)	0	100	100
5	E	81/123 (66%)	74 (91%)	6 (7%)	1 (1%)	13	40
All	All	1473/1914 (77%)	1370 (93%)	93 (6%)	10 (1%)	22	54

5 of 10 Ramachandran outliers are listed below:

Mol	Chain	Res	Type
2	B	249	THR
3	C	38	ASP
5	E	41	ASN
3	C	77	GLY
1	A	277	LEU

5.3.2 Protein sidechains (i)

In the following table, the Percentiles column shows the percent sidechain outliers of the chain as a percentile score with respect to all X-ray entries followed by that with respect to entries of similar

resolution.

The Analysed column shows the number of residues for which the sidechain conformation was analysed, and the total number of residues.

Mol	Chain	Analysed	Rotameric	Outliers	Percentiles	
1	A	670/688 (97%)	651 (97%)	19 (3%)	43	76
2	B	287/321 (89%)	281 (98%)	6 (2%)	53	81
3	C	41/276 (15%)	41 (100%)	0	100	100
4	D	176/204 (86%)	174 (99%)	2 (1%)	73	92
5	E	72/103 (70%)	56 (78%)	16 (22%)	1	3
All	All	1246/1592 (78%)	1203 (96%)	43 (4%)	36	70

5 of 43 residues with a non-rotameric sidechain are listed below:

Mol	Chain	Res	Type
5	E	41	ASN
5	E	78	ARG
5	E	50	MET
5	E	63	LEU
5	E	92	THR

Sometimes sidechains can be flipped to improve hydrogen bonding and reduce clashes. All (1) such sidechains are listed below:

Mol	Chain	Res	Type
1	A	30	HIS

5.3.3 RNA (i)

There are no RNA molecules in this entry.

5.4 Non-standard residues in protein, DNA, RNA chains (i)

There are no non-standard protein/DNA/RNA residues in this entry.

5.5 Carbohydrates (i)

There are no monosaccharides in this entry.

5.6 Ligand geometry (i)

There are no ligands in this entry.

5.7 Other polymers (i)

There are no such residues in this entry.

5.8 Polymer linkage issues (i)

There are no chain breaks in this entry.

6 Fit of model and data (i)

6.1 Protein, DNA and RNA chains (i)

In the following table, the column labelled '#RSRZ> 2' contains the number (and percentage) of RSRZ outliers, followed by percent RSRZ outliers for the chain as percentile scores relative to all X-ray entries and entries of similar resolution. The OWAB column contains the minimum, median, 95th percentile and maximum values of the occupancy-weighted average B-factor per residue. The column labelled 'Q< 0.9' lists the number of (and percentage) of residues with an average occupancy less than 0.9.

Mol	Chain	Analysed	<RSRZ>	#RSRZ>2			OWAB(Å^2)	Q<0.9
1	A	786/810 (97%)	0.44	42 (5%)	26	22	92, 112, 150, 182	0
2	B	354/392 (90%)	0.82	43 (12%)	4	3	94, 113, 154, 214	0
3	C	56/344 (16%)	1.10	11 (19%)	1	0	90, 119, 181, 188	0
4	D	208/245 (84%)	0.39	6 (2%)	51	47	94, 112, 162, 213	0
5	E	83/123 (67%)	0.68	8 (9%)	8	6	99, 122, 156, 189	0
All	All	1487/1914 (77%)	0.56	110 (7%)	14	11	90, 113, 156, 214	0

The worst 5 of 110 RSRZ outliers are listed below:

Mol	Chain	Res	Type	RSRZ
3	C	30	ARG	8.9
2	B	104	PHE	7.8
2	B	103	TRP	6.6
5	E	83	HIS	6.3
3	C	31	TYR	6.0

6.2 Non-standard residues in protein, DNA, RNA chains (i)

There are no non-standard protein/DNA/RNA residues in this entry.

6.3 Carbohydrates (i)

There are no monosaccharides in this entry.

6.4 Ligands (i)

There are no ligands in this entry.

6.5 Other polymers (i)

There are no such residues in this entry.