wwPDB X-ray Structure Validation Summary Report (i)

Nov 20, 2023 – 01:53 PM JST

PDB ID	:	7CML
Title	:	The Crystal Structure of human JNK2 from Biortus.
Authors	:	Wang, F.; Lin, D.; Cheng, W.; Miao, Q.; Huang, Y.; Shang, H.
Deposited on	:	2020-07-28
Resolution	:	2.15 Å(reported)

This is a wwPDB X-ray Structure Validation Summary Report for a publicly released PDB entry.

We welcome your comments at *validation@mail.wwpdb.org*
A user guide is available at
https://www.wwpdb.org/validation/2017/XrayValidationReportHelp
with specific help available everywhere you see the (i) symbol.

The types of validation reports are described at
http://www.wwpdb.org/validation/2017/FAQs#types.

The following versions of software and data (see references (1)) were used in the production of this report:

MolProbity	:	4.02b-467
Xtriage (Phenix)	:	1.13
EDS	:	2.36
Percentile statistics	:	20191225.v01 (using entries in the PDB archive December 25th 2019)
Refmac	:	5.8.0158
CCP4	:	7.0.044 (Gargrove)
Ideal geometry (proteins)	:	Engh & Huber (2001)
Ideal geometry (DNA, RNA)	:	Parkinson et al. (1996)
Validation Pipeline (wwPDB-VP)	:	2.36

1 Overall quality at a glance (i)

The following experimental techniques were used to determine the structure:
X-RAY DIFFRACTION

The reported resolution of this entry is 2.15 Å.

Percentile scores (ranging between 0-100) for global validation metrics of the entry are shown in the following graphic. The table shows the number of entries on which the scores are based.

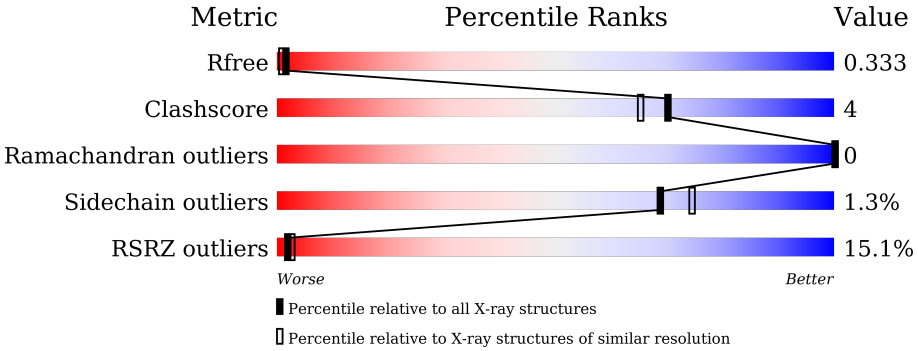

Metric	Whole archive (#Entries)	Similar resolution (#Entries, resolution range(Å))
R_{free}	130704	1479 (2.16-2.16)
Clashscore	141614	1585 (2.16-2.16)
Ramachandran outliers	138981	1560 (2.16-2.16)
Sidechain outliers	138945	1559 (2.16-2.16)
RSRZ outliers	127900	1456 (2.16-2.16)

The table below summarises the geometric issues observed across the polymeric chains and their fit to the electron density. The red, orange, yellow and green segments of the lower bar indicate the fraction of residues that contain outliers for >=3, 2, 1 and 0 types of geometric quality criteria respectively. A grey segment represents the fraction of residues that are not modelled. The numeric value for each fraction is indicated below the corresponding segment, with a dot representing fractions <=5% The upper red bar (where present) indicates the fraction of residues that have poor fit to the electron density. The numeric value is given above the bar.

Mol	Chain	Length	Quality of chain
1	A	381	13% 78% 9% 12%
1	B	381	13% 81% 7% 12%

2 Entry composition (i)

There are 2 unique types of molecules in this entry. The entry contains 5601 atoms, of which 0 are hydrogens and 0 are deuteriums.

In the tables below, the ZeroOcc column contains the number of atoms modelled with zero occupancy, the AltConf column contains the number of residues with at least one atom in alternate conformation and the Trace column contains the number of residues modelled with at most 2 atoms.

- Molecule 1 is a protein called Mitogen-activated protein kinase 9.

Mol	Chain	Residues	Atoms					ZeroOcc	AltConf	Trace
			Total	C	N	O	S			
1	A	334	2713	1750	452	494	17	0	2	0
1	B	335	2721	1754	454	496	17	0	2	0

There are 50 discrepancies between the modelled and reference sequences:

Chain	Residue	Modelled	Actual	Comment	Reference
A	-16	MET	-	expression tag	UNP P45984
A	-15	GLY	-	expression tag	UNP P45984
A	-14	GLY	-	expression tag	UNP P45984
A	-13	SER	-	expression tag	UNP P45984
A	-12	HIS	-	expression tag	UNP P45984
A	-11	HIS	-	expression tag	UNP P45984
A	-10	HIS	-	expression tag	UNP P45984
A	-9	HIS	-	expression tag	UNP P45984
A	-8	HIS	-	expression tag	UNP P45984
A	-7	HIS	-	expression tag	UNP P45984
A	-6	GLU	-	expression tag	UNP P45984
A	-5	ASN	-	expression tag	UNP P45984
A	-4	LEU	-	expression tag	UNP P45984
A	-3	TYR	-	expression tag	UNP P45984
A	-2	PHE	-	expression tag	UNP P45984
A	-1	GLN	-	expression tag	UNP P45984
A	0	GLY	-	expression tag	UNP P45984
A	3	LYS	ASP	engineered mutation	UNP P45984
A	6	VAL	CYS	engineered mutation	UNP P45984
A	8	ASN	SER	engineered mutation	UNP P45984
A	14	GLU	GLN	engineered mutation	UNP P45984
A	203	ALA	LYS	engineered mutation	UNP P45984
A	204	ALA	GLU	engineered mutation	UNP P45984
A	250	ALA	LYS	engineered mutation	UNP P45984
A	251	ALA	LYS	engineered mutation	UNP P45984

Continued on next page...

Continued from previous page...

Chain	Residue	Modelled	Actual	Comment	Reference
B	-16	MET	-	expression tag	UNP P45984
B	-15	GLY	-	expression tag	UNP P45984
B	-14	GLY	-	expression tag	UNP P45984
B	-13	SER	-	expression tag	UNP P45984
B	-12	HIS	-	expression tag	UNP P45984
B	-11	HIS	-	expression tag	UNP P45984
B	-10	HIS	-	expression tag	UNP P45984
B	-9	HIS	-	expression tag	UNP P45984
B	-8	HIS	-	expression tag	UNP P45984
B	-7	HIS	-	expression tag	UNP P45984
B	-6	GLU	-	expression tag	UNP P45984
B	-5	ASN	-	expression tag	UNP P45984
B	-4	LEU	-	expression tag	UNP P45984
B	-3	TYR	-	expression tag	UNP P45984
B	-2	PHE	-	expression tag	UNP P45984
B	-1	GLN	-	expression tag	UNP P45984
B	0	GLY	-	expression tag	UNP P45984
B	3	LYS	ASP	engineered mutation	UNP P45984
B	6	VAL	CYS	engineered mutation	UNP P45984
B	8	ASN	SER	engineered mutation	UNP P45984
B	14	GLU	GLN	engineered mutation	UNP P45984
B	203	ALA	LYS	engineered mutation	UNP P45984
B	204	ALA	GLU	engineered mutation	UNP P45984
B	250	ALA	LYS	engineered mutation	UNP P45984
B	251	ALA	LYS	engineered mutation	UNP P45984

- Molecule 2 is water.

Mol	Chain	Residues	Atoms		ZeroOcc	AltConf
			Total	O		
2	A	84	84	84	0	0
			Total	O		
2	B	83	83	83	0	0

3 Residue-property plots (i)

These plots are drawn for all protein, RNA, DNA and oligosaccharide chains in the entry. The first graphic for a chain summarises the proportions of the various outlier classes displayed in the second graphic. The second graphic shows the sequence view annotated by issues in geometry and electron density. Residues are color-coded according to the number of geometric quality criteria for which they contain at least one outlier: green = 0, yellow = 1, orange = 2 and red = 3 or more. A red dot above a residue indicates a poor fit to the electron density (RSRZ > 2). Stretches of 2 or more consecutive residues without any outlier are shown as a green connector. Residues present in the sample, but not in the model, are shown in grey.

• Molecule 1: Mitogen-activated protein kinase 9

Chain A:

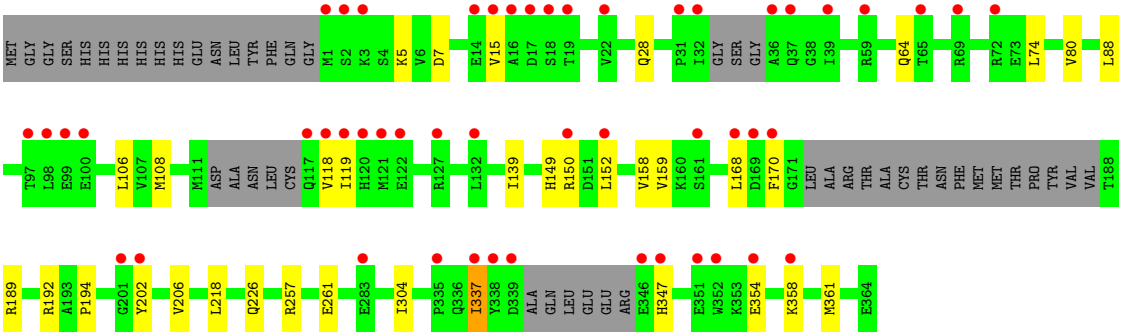

• Molecule 1: Mitogen-activated protein kinase 9

Chain B:

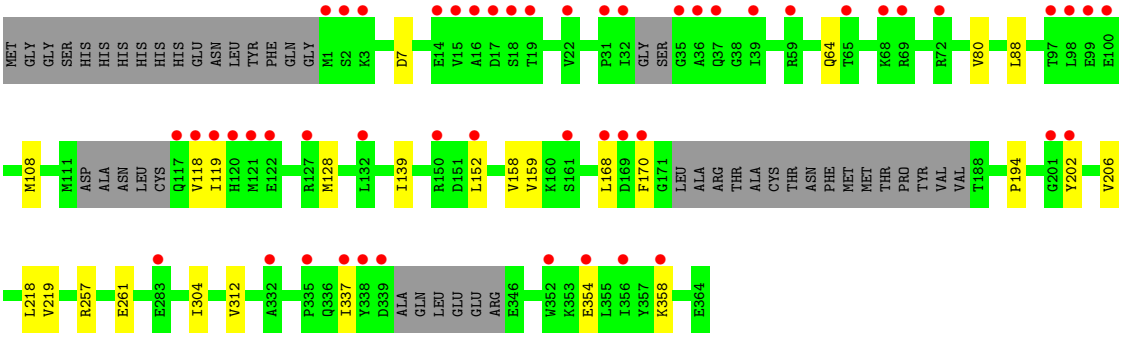

4 Data and refinement statistics (i)

Property	Value	Source
Space group	P 4	Depositor
Cell constants a, b, c, α, β, γ	102.00Å 102.00Å 70.09Å 90.00° 90.00° 90.00°	Depositor
Resolution (Å)	19.62 – 2.15 19.61 – 2.15	Depositor EDS
% Data completeness (in resolution range)	99.8 (19.62-2.15) 100.0 (19.61-2.15)	Depositor EDS
R_{merge}	0.14	Depositor
R_{sym}	(Not available)	Depositor
$< I/\sigma(I) >$ [1]	2.64 (at 2.15Å)	Xtriage
Refinement program	REFMAC 5.8.0258	Depositor
R, R_{free}	0.284 , 0.327 0.293 , 0.333	Depositor DCC
R_{free} test set	1929 reflections (4.91%)	wwPDB-VP
Wilson B-factor (Å^2)	29.1	Xtriage
Anisotropy	0.074	Xtriage
Bulk solvent k_{sol}(e/Å^3), B_{sol}(Å^2)	0.37 , 35.4	EDS
L-test for twinning[2]	$< \|L\| > = 0.46$, $< L^2 > = 0.28$	Xtriage
Estimated twinning fraction	0.047 for h,-k,-l	Xtriage
F_o,F_c correlation	0.96	EDS
Total number of atoms	5601	wwPDB-VP
Average B, all atoms (Å^2)	39.0	wwPDB-VP

Xtriage's analysis on translational NCS is as follows: *The analyses of the Patterson function reveals a significant off-origin peak that is 95.51 % of the origin peak, indicating pseudo-translational symmetry. The chance of finding a peak of this or larger height randomly in a structure without pseudo-translational symmetry is equal to 1.2778e-09. The detected translational NCS is most likely also responsible for the elevated intensity ratio.*

[1]Intensities estimated from amplitudes.

[2]Theoretical values of $< |L| >$, $< L^2 >$ for acentric reflections are 0.5, 0.333 respectively for untwinned datasets, and 0.375, 0.2 for perfectly twinned datasets.

5 Model quality (i)

5.1 Standard geometry (i)

The Z score for a bond length (or angle) is the number of standard deviations the observed value is removed from the expected value. A bond length (or angle) with $|Z| > 5$ is considered an outlier worth inspection. RMSZ is the root-mean-square of all Z scores of the bond lengths (or angles).

Mol	Chain	Bond lengths		Bond angles	
		RMSZ	$\#\|Z\| >5$	RMSZ	$\#\|Z\| >5$
1	A	0.63	0/2780	0.71	0/3763
1	B	0.63	0/2788	0.71	0/3773
All	All	0.63	0/5568	0.71	0/7536

There are no bond length outliers.

There are no bond angle outliers.

There are no chirality outliers.

There are no planarity outliers.

5.2 Too-close contacts (i)

In the following table, the Non-H and H(model) columns list the number of non-hydrogen atoms and hydrogen atoms in the chain respectively. The H(added) column lists the number of hydrogen atoms added and optimized by MolProbity. The Clashes column lists the number of clashes within the asymmetric unit, whereas Symm-Clashes lists symmetry-related clashes.

Mol	Chain	Non-H	H(model)	H(added)	Clashes	Symm-Clashes
1	A	2713	0	2715	21	0
1	B	2721	0	2724	18	0
2	A	84	0	0	1	0
2	B	83	0	0	1	0
All	All	5601	0	5439	39	0

The all-atom clashscore is defined as the number of clashes found per 1000 atoms (including hydrogen atoms). The all-atom clashscore for this structure is 4.

The worst 5 of 39 close contacts within the same asymmetric unit are listed below, sorted by their clash magnitude.

Atom-1	Atom-2	Interatomic distance (Å)	Clash overlap (Å)
1:A:64:GLN:NE2	1:A:347:HIS:O	2.25	0.70

Continued on next page...

Continued from previous page...

Atom-1	Atom-2	Interatomic distance (Å)	Clash overlap (Å)
1:A:158:VAL:HG13	1:A:168:LEU:HD11	1.81	0.63
1:B:158:VAL:HG13	1:B:168:LEU:HD11	1.82	0.61
1:A:226:GLN:NE2	2:A:402:HOH:O	2.35	0.56
1:A:202:TYR:HB2	1:A:206:VAL:CG1	2.37	0.55

There are no symmetry-related clashes.

5.3 Torsion angles (i)

5.3.1 Protein backbone (i)

In the following table, the Percentiles column shows the percent Ramachandran outliers of the chain as a percentile score with respect to all X-ray entries followed by that with respect to entries of similar resolution.

The Analysed column shows the number of residues for which the backbone conformation was analysed, and the total number of residues.

Mol	Chain	Analysed	Favoured	Allowed	Outliers	Percentiles	
1	A	326/381 (86%)	316 (97%)	10 (3%)	0	100	100
1	B	327/381 (86%)	315 (96%)	12 (4%)	0	100	100
All	All	653/762 (86%)	631 (97%)	22 (3%)	0	100	100

There are no Ramachandran outliers to report.

5.3.2 Protein sidechains (i)

In the following table, the Percentiles column shows the percent sidechain outliers of the chain as a percentile score with respect to all X-ray entries followed by that with respect to entries of similar resolution.

The Analysed column shows the number of residues for which the sidechain conformation was analysed, and the total number of residues.

Mol	Chain	Analysed	Rotameric	Outliers	Percentiles	
1	A	299/339 (88%)	293 (98%)	6 (2%)	55	59
1	B	300/339 (88%)	298 (99%)	2 (1%)	84	89
All	All	599/678 (88%)	591 (99%)	8 (1%)	69	74

5 of 8 residues with a non-rotameric sidechain are listed below:

Mol	Chain	Res	Type
1	B	64	GLN
1	B	7	ASP
1	A	337	ILE
1	A	28	GLN
1	A	361	MET

Sometimes sidechains can be flipped to improve hydrogen bonding and reduce clashes. 5 of 10 such sidechains are listed below:

Mol	Chain	Res	Type
1	B	258	ASN
1	B	262	ASN
1	B	293	GLN
1	A	293	GLN
1	B	8	ASN

5.3.3 RNA (i)

There are no RNA molecules in this entry.

5.4 Non-standard residues in protein, DNA, RNA chains (i)

There are no non-standard protein/DNA/RNA residues in this entry.

5.5 Carbohydrates (i)

There are no monosaccharides in this entry.

5.6 Ligand geometry (i)

There are no ligands in this entry.

5.7 Other polymers (i)

There are no such residues in this entry.

5.8 Polymer linkage issues (i)

There are no chain breaks in this entry.

6 Fit of model and data (i)

6.1 Protein, DNA and RNA chains (i)

In the following table, the column labelled '#RSRZ> 2' contains the number (and percentage) of RSRZ outliers, followed by percent RSRZ outliers for the chain as percentile scores relative to all X-ray entries and entries of similar resolution. The OWAB column contains the minimum, median, 95th percentile and maximum values of the occupancy-weighted average B-factor per residue. The column labelled 'Q< 0.9' lists the number of (and percentage) of residues with an average occupancy less than 0.9.

Mol	Chain	Analysed	<RSRZ>	#RSRZ>2			OWAB(Å^2)	Q<0.9
1	A	334/381 (87%)	0.80	50 (14%)	2	3	20, 37, 68, 80	6 (1%)
1	B	335/381 (87%)	0.80	51 (15%)	2	2	20, 36, 67, 78	8 (2%)
All	All	669/762 (87%)	0.80	101 (15%)	2	3	20, 37, 68, 80	14 (2%)

The worst 5 of 101 RSRZ outliers are listed below:

Mol	Chain	Res	Type	RSRZ
1	A	36	ALA	4.7
1	B	118	VAL	4.5
1	A	2	SER	4.4
1	A	117	GLN	4.4
1	A	283	GLU	4.3

6.2 Non-standard residues in protein, DNA, RNA chains (i)

There are no non-standard protein/DNA/RNA residues in this entry.

6.3 Carbohydrates (i)

There are no monosaccharides in this entry.

6.4 Ligands (i)

There are no ligands in this entry.

6.5 Other polymers (i)

There are no such residues in this entry.