Full wwPDB X-ray Structure Validation Report (i)

Aug 22, 2023 – 03:38 PM EDT

PDB ID	:	3B2X
Title	:	Crystal Structure of E. coli Aminopeptidase N in complex with Lysine
Authors	:	Addlagatta, A.; Gay, L.; Matthews, B.W.
Deposited on	:	2007-10-19
Resolution	:	1.50 Å(reported)

This is a Full wwPDB X-ray Structure Validation Report for a publicly released PDB entry.

We welcome your comments at *validation@mail.wwpdb.org*
A user guide is available at
https://www.wwpdb.org/validation/2017/XrayValidationReportHelp
with specific help available everywhere you see the (i) symbol.

The types of validation reports are described at
http://www.wwpdb.org/validation/2017/FAQs#types.

The following versions of software and data (see references (i)) were used in the production of this report:

MolProbity	:	4.02b-467
Mogul	:	1.8.5 (274361), CSD as541be (2020)
Xtriage (Phenix)	:	1.13
EDS	:	2.35
Percentile statistics	:	20191225.v01 (using entries in the PDB archive December 25th 2019)
Refmac	:	5.8.0158
CCP4	:	7.0.044 (Gargrove)
Ideal geometry (proteins)	:	Engh & Huber (2001)
Ideal geometry (DNA, RNA)	:	Parkinson et al. (1996)
Validation Pipeline (wwPDB-VP)	:	2.35

1 Overall quality at a glance (i)

The following experimental techniques were used to determine the structure:
X-RAY DIFFRACTION

The reported resolution of this entry is 1.50 Å.

Percentile scores (ranging between 0-100) for global validation metrics of the entry are shown in the following graphic. The table shows the number of entries on which the scores are based.

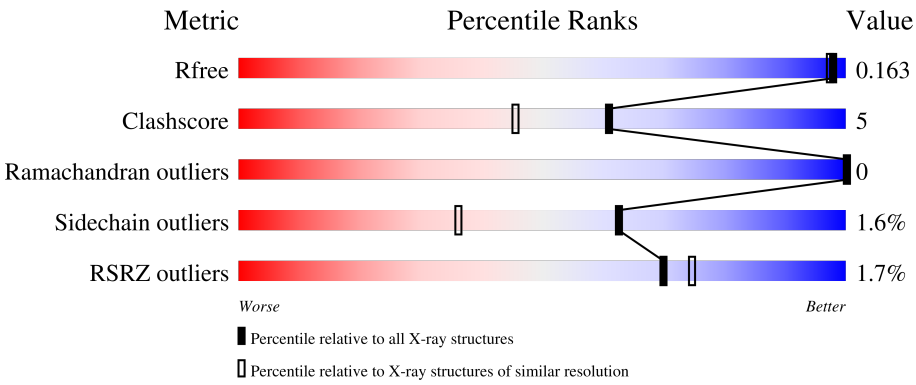

Metric	Whole archive (#Entries)	Similar resolution (#Entries, resolution range(Å))
R_{free}	130704	2936 (1.50-1.50)
Clashscore	141614	3144 (1.50-1.50)
Ramachandran outliers	138981	3066 (1.50-1.50)
Sidechain outliers	138945	3064 (1.50-1.50)
RSRZ outliers	127900	2884 (1.50-1.50)

The table below summarises the geometric issues observed across the polymeric chains and their fit to the electron density. The red, orange, yellow and green segments of the lower bar indicate the fraction of residues that contain outliers for >=3, 2, 1 and 0 types of geometric quality criteria respectively. A grey segment represents the fraction of residues that are not modelled. The numeric value for each fraction is indicated below the corresponding segment, with a dot representing fractions <=5% The upper red bar (where present) indicates the fraction of residues that have poor fit to the electron density. The numeric value is given above the bar.

Mol	Chain	Length	Quality of chain
1	A	891	2% 90% 6% •

2 Entry composition (i)

There are 7 unique types of molecules in this entry. The entry contains 8636 atoms, of which 0 are hydrogens and 0 are deuteriums.

In the tables below, the ZeroOcc column contains the number of atoms modelled with zero occupancy, the AltConf column contains the number of residues with at least one atom in alternate conformation and the Trace column contains the number of residues modelled with at most 2 atoms.

- Molecule 1 is a protein called Aminopeptidase N.

Mol	Chain	Residues	Atoms					ZeroOcc	AltConf	Trace
			Total	C	N	O	S			
1	A	866	7302	4610	1269	1395	28	0	48	0

There are 21 discrepancies between the modelled and reference sequences:

Chain	Residue	Modelled	Actual	Comment	Reference
A	-20	MET	-	expression tag	UNP P04825
A	-19	GLY	-	expression tag	UNP P04825
A	-18	SER	-	expression tag	UNP P04825
A	-17	SER	-	expression tag	UNP P04825
A	-16	HIS	-	expression tag	UNP P04825
A	-15	HIS	-	expression tag	UNP P04825
A	-14	HIS	-	expression tag	UNP P04825
A	-13	HIS	-	expression tag	UNP P04825
A	-12	HIS	-	expression tag	UNP P04825
A	-11	HIS	-	expression tag	UNP P04825
A	-10	SER	-	expression tag	UNP P04825
A	-9	SER	-	expression tag	UNP P04825
A	-8	GLY	-	expression tag	UNP P04825
A	-7	GLU	-	expression tag	UNP P04825
A	-6	ASN	-	expression tag	UNP P04825
A	-5	LEU	-	expression tag	UNP P04825
A	-4	TYR	-	expression tag	UNP P04825
A	-3	PHE	-	expression tag	UNP P04825
A	-2	GLN	-	expression tag	UNP P04825
A	-1	GLY	-	expression tag	UNP P04825
A	0	HIS	-	expression tag	UNP P04825

- Molecule 2 is ZINC ION (three-letter code: ZN) (formula: Zn).

Mol	Chain	Residues	Atoms		ZeroOcc	AltConf
			Total	Zn		
2	A	1	1	1	0	0

- Molecule 3 is SODIUM ION (three-letter code: NA) (formula: Na).

Mol	Chain	Residues	Atoms		ZeroOcc	AltConf
			Total	Na		
3	A	2	2	2	0	0

- Molecule 4 is LYSINE (three-letter code: LYS) (formula: $C_6H_{15}N_2O_2$).

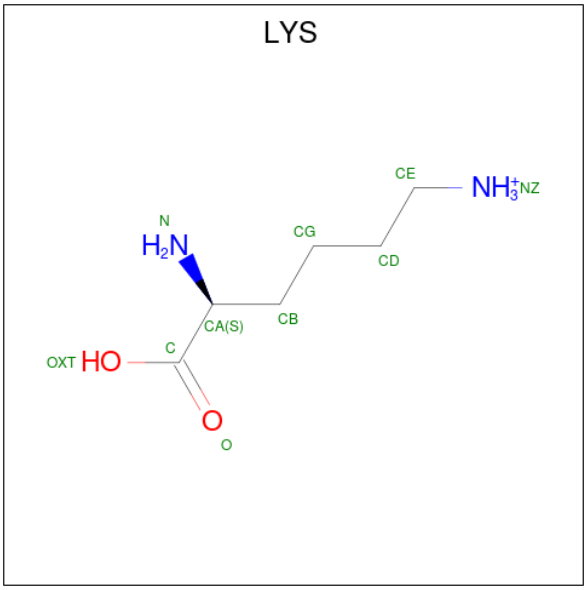

Mol	Chain	Residues	Atoms				ZeroOcc	AltConf
			Total	C	N	O		
4	A	1	10	6	2	2	0	0

- Molecule 5 is MALONATE ION (three-letter code: MLI) (formula: $C_3H_2O_4$).

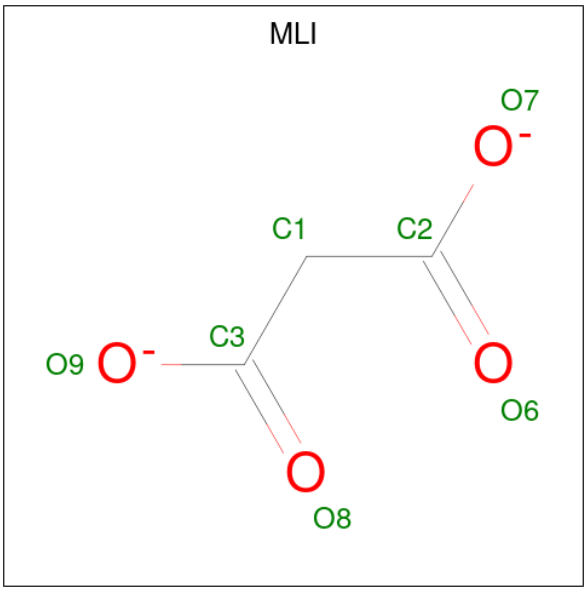

Mol	Chain	Residues	Atoms			ZeroOcc	AltConf
			Total	C	O		
5	A	1	7	3	4	0	0
5	A	1	7	3	4	0	0
5	A	1	7	3	4	0	0

- Molecule 6 is GLYCEROL (three-letter code: GOL) (formula: $C_3H_8O_3$).

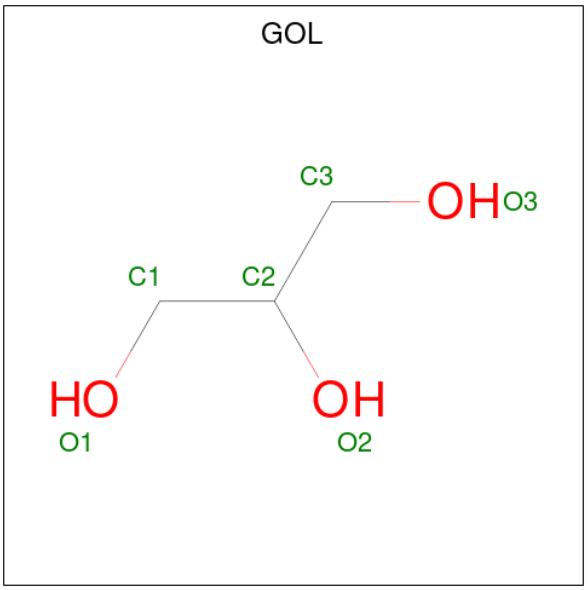

Mol	Chain	Residues	Atoms			ZeroOcc	AltConf
			Total	C	O		
6	A	1	6	3	3	0	0

Continued on next page...

Continued from previous page...

Mol	Chain	Residues	Atoms			ZeroOcc	AltConf
			Total	C	O		
6	A	1	6	3	3	0	0
			Total	C	O		
6	A	1	12	6	6	0	1
			Total	C	O		
6	A	1	6	3	3	0	0
			Total	C	O		
6	A	1	12	6	6	0	1
			Total	C	O		
6	A	1	12	6	6	0	1
			Total	C	O		
6	A	1	6	3	3	0	0
			Total	C	O		
6	A	1	12	6	6	0	1
			Total	C	O		
6	A	1	12	6	6	0	1

- Molecule 7 is water.

Mol	Chain	Residues	Atoms		ZeroOcc	AltConf
			Total	O		
7	A	1216	1216	1216	0	0

3 Residue-property plots (i)

These plots are drawn for all protein, RNA, DNA and oligosaccharide chains in the entry. The first graphic for a chain summarises the proportions of the various outlier classes displayed in the second graphic. The second graphic shows the sequence view annotated by issues in geometry and electron density. Residues are color-coded according to the number of geometric quality criteria for which they contain at least one outlier: green = 0, yellow = 1, orange = 2 and red = 3 or more. A red dot above a residue indicates a poor fit to the electron density (RSRZ > 2). Stretches of 2 or more consecutive residues without any outlier are shown as a green connector. Residues present in the sample, but not in the model, are shown in grey.

• Molecule 1: Aminopeptidase N

Chain A:

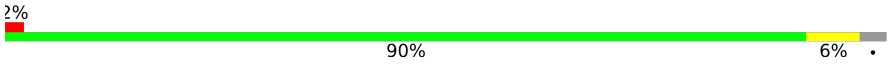

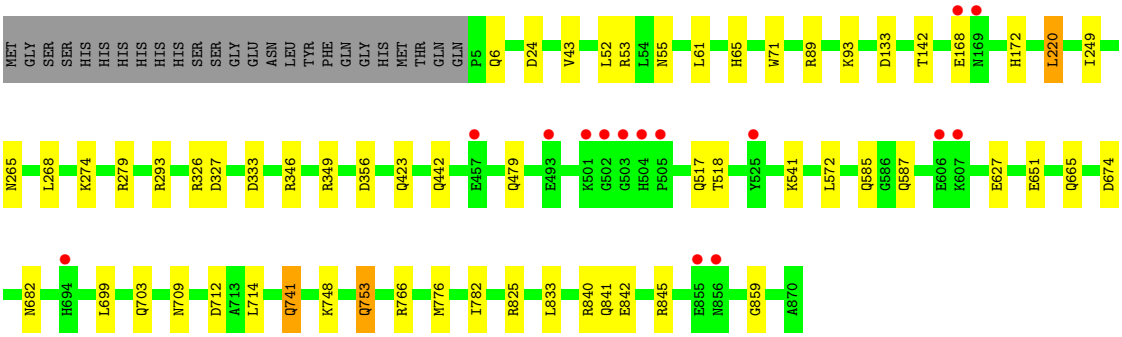

4 Data and refinement statistics (i)

Property	Value	Source
Space group	P 31 2 1	Depositor
Cell constants a, b, c, α, β, γ	120.56Å 120.56Å 170.27Å 90.00° 90.00° 120.00°	Depositor
Resolution (Å)	49.94 – 1.50 49.91 – 1.50	Depositor EDS
% Data completeness (in resolution range)	88.8 (49.94-1.50) 88.8 (49.91-1.50)	Depositor EDS
R_{merge}	0.09	Depositor
R_{sym}	(Not available)	Depositor
$< I/\sigma(I) >$ [1]	1.66 (at 1.50Å)	Xtriage
Refinement program	REFMAC	Depositor
R, R_{free}	0.147 , 0.165 0.145 , 0.163	Depositor DCC
R_{free} test set	6049 reflections (3.00%)	wwPDB-VP
Wilson B-factor (Å^2)	14.1	Xtriage
Anisotropy	0.313	Xtriage
Bulk solvent k_{sol}(e/Å^3), B_{sol}(Å^2)	0.40 , 64.5	EDS
L-test for twinning[2]	$< \|L\| > = 0.49$, $< L^2 > = 0.32$	Xtriage
Estimated twinning fraction	0.018 for -h,-k,l	Xtriage
F_o,F_c correlation	0.97	EDS
Total number of atoms	8636	wwPDB-VP
Average B, all atoms (Å^2)	17.0	wwPDB-VP

Xtriage's analysis on translational NCS is as follows: *The largest off-origin peak in the Patterson function is 3.67% of the height of the origin peak. No significant pseudotranslation is detected.*

[1]Intensities estimated from amplitudes.

[2]Theoretical values of $< |L| >$, $< L^2 >$ for acentric reflections are 0.5, 0.333 respectively for untwinned datasets, and 0.375, 0.2 for perfectly twinned datasets.

5 Model quality (i)

5.1 Standard geometry (i)

Bond lengths and bond angles in the following residue types are not validated in this section: MLI, ZN, GOL, NA

The Z score for a bond length (or angle) is the number of standard deviations the observed value is removed from the expected value. A bond length (or angle) with $|Z| > 5$ is considered an outlier worth inspection. RMSZ is the root-mean-square of all Z scores of the bond lengths (or angles).

Mol	Chain	Bond lengths		Bond angles	
		RMSZ	$\#\|Z\| >5$	RMSZ	$\#\|Z\| >5$
1	A	0.44	0/7496	0.56	0/10166

There are no bond length outliers.

There are no bond angle outliers.

There are no chirality outliers.

There are no planarity outliers.

5.2 Too-close contacts (i)

In the following table, the Non-H and H(model) columns list the number of non-hydrogen atoms and hydrogen atoms in the chain respectively. The H(added) column lists the number of hydrogen atoms added and optimized by MolProbity. The Clashes column lists the number of clashes within the asymmetric unit, whereas Symm-Clashes lists symmetry-related clashes.

Mol	Chain	Non-H	H(model)	H(added)	Clashes	Symm-Clashes
1	A	7302	0	7131	59	0
2	A	1	0	0	0	0
3	A	2	0	0	0	0
4	A	10	0	12	0	0
5	A	21	0	6	1	0
6	A	84	0	112	10	0
7	A	1216	0	0	42	0
All	All	8636	0	7261	67	0

The all-atom clashscore is defined as the number of clashes found per 1000 atoms (including hydrogen atoms). The all-atom clashscore for this structure is 5.

All (67) close contacts within the same asymmetric unit are listed below, sorted by their clash magnitude.

Atom-1	Atom-2	Interatomic distance (Å)	Clash overlap (Å)
1:A:825[B]:ARG:NH2	7:A:2208:HOH:O	1.80	1.14
6:A:974:GOL:H12	7:A:1908:HOH:O	0.89	1.06
1:A:627[A]:GLU:HG3	7:A:1446:HOH:O	1.58	1.02
1:A:24[B]:ASP:OD1	1:A:142[B]:THR:HG22	1.60	1.01
6:A:975[B]:GOL:C3	7:A:1918:HOH:O	2.13	0.97
1:A:24[B]:ASP:OD1	1:A:142[B]:THR:CG2	2.14	0.95
1:A:825[B]:ARG:CZ	7:A:2208:HOH:O	2.09	0.93
1:A:766[B]:ARG:NH1	7:A:1994:HOH:O	1.92	0.92
6:A:975[B]:GOL:O3	7:A:1918:HOH:O	1.89	0.89
1:A:349[B]:ARG:NH2	7:A:2121:HOH:O	1.71	0.87
1:A:442:GLN:HE22	1:A:479:GLN:H	1.27	0.83
1:A:423[B]:GLN:NE2	7:A:2012:HOH:O	2.13	0.80
1:A:825[B]:ARG:NH1	7:A:1924:HOH:O	1.81	0.80
6:A:972[B]:GOL:O3	7:A:2118:HOH:O	2.02	0.76
6:A:975[B]:GOL:H31	7:A:1918:HOH:O	1.80	0.75
1:A:766[B]:ARG:NH2	7:A:1994:HOH:O	2.19	0.74
1:A:71:TRP:O	6:A:971:GOL:H2	1.87	0.74
1:A:541[B]:LYS:HE2	1:A:627[B]:GLU:OE1	1.87	0.74
1:A:627[A]:GLU:HG2	7:A:1448:HOH:O	1.88	0.73
1:A:651[A]:GLU:OE2	7:A:2198:HOH:O	2.06	0.72
1:A:825[B]:ARG:NH2	7:A:1924:HOH:O	2.25	0.70
1:A:333:ASP:O	7:A:1623:HOH:O	2.10	0.68
1:A:43[B]:VAL:HG12	1:A:89:ARG:HG2	1.77	0.65
1:A:274:LYS:HE3	7:A:1498:HOH:O	1.96	0.65
1:A:24[B]:ASP:OD1	1:A:142[B]:THR:HG21	1.97	0.64
1:A:518[B]:THR:CG2	7:A:2168:HOH:O	2.44	0.64
6:A:976[B]:GOL:C1	7:A:1906:HOH:O	2.46	0.63
1:A:55:ASN:HD22	1:A:133:ASP:H	1.46	0.63
1:A:825[B]:ARG:NH1	7:A:2208:HOH:O	2.24	0.63
1:A:766[B]:ARG:NH2	7:A:2061:HOH:O	2.30	0.62
1:A:346[B]:ARG:NH1	7:A:1736:HOH:O	2.33	0.61
5:A:990:MLI:O9	7:A:2045:HOH:O	0.61	0.60
1:A:346[A]:ARG:NH2	7:A:2163:HOH:O	1.94	0.59
1:A:53[B]:ARG:NH2	7:A:2108:HOH:O	2.26	0.59
1:A:709:ASN:ND2	1:A:712:ASP:H	2.02	0.58
1:A:766[B]:ARG:CZ	7:A:1994:HOH:O	2.35	0.57
1:A:65:HIS:HD2	7:A:1013:HOH:O	1.86	0.57
1:A:833:LEU:O	1:A:841:GLN:HG2	2.05	0.57
1:A:842[A]:GLU:OE2	1:A:845:ARG:NH1	2.37	0.57
1:A:585[A]:GLN:HB2	1:A:587:GLN:HE21	1.69	0.56
1:A:279:ARG:NH1	7:A:1929:HOH:O	2.38	0.56
1:A:293[A]:ARG:HH12	6:A:976[A]:GOL:H31	1.70	0.56

Continued on next page...

Continued from previous page...

Atom-1	Atom-2	Interatomic distance (Å)	Clash overlap (Å)
1:A:249[B]:ILE:HG22	7:A:1273:HOH:O	2.05	0.55
6:A:972[B]:GOL:C3	7:A:2118:HOH:O	2.54	0.55
1:A:442:GLN:NE2	1:A:479:GLN:H	2.01	0.55
1:A:518[B]:THR:HG21	7:A:2168:HOH:O	2.06	0.55
1:A:714:LEU:HD22	1:A:748:LYS:HD3	1.89	0.54
1:A:274:LYS:CE	7:A:1498:HOH:O	2.54	0.54
1:A:293[A]:ARG:HH12	6:A:976[A]:GOL:C3	2.21	0.54
1:A:753:GLN:HE21	1:A:753:GLN:HA	1.72	0.53
1:A:43[B]:VAL:HG21	7:A:1203:HOH:O	2.08	0.53
1:A:665:GLN:HE22	1:A:674:ASP:HA	1.73	0.53
1:A:423[B]:GLN:CD	7:A:2012:HOH:O	2.46	0.52
1:A:682:ASN:ND2	1:A:703:GLN:HE22	2.09	0.51
1:A:168:GLU:HG2	7:A:1597:HOH:O	2.13	0.47
1:A:349[A]:ARG:NH2	7:A:1603:HOH:O	2.46	0.46
1:A:682:ASN:HD21	1:A:703:GLN:HE22	1.63	0.46
1:A:776:MET:O	1:A:782:ILE:HD11	2.16	0.46
1:A:93[B]:LYS:NZ	7:A:1960:HOH:O	2.48	0.45
1:A:220:LEU:HB2	7:A:1418:HOH:O	2.17	0.45
1:A:326:ARG:HG2	1:A:326:ARG:HH11	1.83	0.44
1:A:709:ASN:HD21	1:A:712:ASP:H	1.65	0.44
1:A:741[A]:GLN:NE2	1:A:741[A]:GLN:H	2.15	0.43
1:A:265:ASN:HB2	1:A:268:LEU:O	2.19	0.43
1:A:423[B]:GLN:NE2	7:A:1758:HOH:O	2.52	0.42
1:A:859:GLY:HA3	7:A:1590:HOH:O	2.20	0.42
1:A:840:ARG:HG2	7:A:1599:HOH:O	2.21	0.41

There are no symmetry-related clashes.

5.3 Torsion angles (i)

5.3.1 Protein backbone (i)

In the following table, the Percentiles column shows the percent Ramachandran outliers of the chain as a percentile score with respect to all X-ray entries followed by that with respect to entries of similar resolution.

The Analysed column shows the number of residues for which the backbone conformation was analysed, and the total number of residues.

Mol	Chain	Analysed	Favoured	Allowed	Outliers	Percentiles
1	A	912/891 (102%)	899 (99%)	13 (1%)	0	100 100

There are no Ramachandran outliers to report.

5.3.2 Protein sidechains (i)

In the following table, the Percentiles column shows the percent sidechain outliers of the chain as a percentile score with respect to all X-ray entries followed by that with respect to entries of similar resolution.

The Analysed column shows the number of residues for which the sidechain conformation was analysed, and the total number of residues.

Mol	Chain	Analysed	Rotameric	Outliers	Percentiles
1	A	787/763 (103%)	772 (98%)	15 (2%)	57 27

All (15) residues with a non-rotameric sidechain are listed below:

Mol	Chain	Res	Type
1	A	6	GLN
1	A	52[A]	LEU
1	A	52[B]	LEU
1	A	61[A]	LEU
1	A	61[B]	LEU
1	A	172	HIS
1	A	220	LEU
1	A	327	ASP
1	A	356	ASP
1	A	517	GLN
1	A	572	LEU
1	A	699	LEU
1	A	741[A]	GLN
1	A	741[B]	GLN
1	A	753	GLN

Sometimes sidechains can be flipped to improve hydrogen bonding and reduce clashes. All (13) such sidechains are listed below:

Mol	Chain	Res	Type
1	A	55	ASN
1	A	65	HIS
1	A	164	GLN
1	A	219	ASN
1	A	442	GLN
1	A	569	GLN
1	A	587	GLN

Continued on next page...

Continued from previous page...

Mol	Chain	Res	Type
1	A	623	ASN
1	A	661	ASN
1	A	665	GLN
1	A	682	ASN
1	A	709	ASN
1	A	753	GLN

5.3.3 RNA (i)

There are no RNA molecules in this entry.

5.4 Non-standard residues in protein, DNA, RNA chains (i)

There are no non-standard protein/DNA/RNA residues in this entry.

5.5 Carbohydrates (i)

There are no monosaccharides in this entry.

5.6 Ligand geometry (i)

Of 21 ligands modelled in this entry, 3 are monoatomic - leaving 18 for Mogul analysis.

In the following table, the Counts columns list the number of bonds (or angles) for which Mogul statistics could be retrieved, the number of bonds (or angles) that are observed in the model and the number of bonds (or angles) that are defined in the Chemical Component Dictionary. The Link column lists molecule types, if any, to which the group is linked. The Z score for a bond length (or angle) is the number of standard deviations the observed value is removed from the expected value. A bond length (or angle) with $|Z| > 2$ is considered an outlier worth inspection. RMSZ is the root-mean-square of all Z scores of the bond lengths (or angles).

Mol	Type	Chain	Res	Link	Bond lengths			Bond angles		
					Counts	RMSZ	$\#\|Z\| > 2$	Counts	RMSZ	$\#\|Z\| > 2$
6	GOL	A	975[A]	-	5,5,5	0.33	0	5,5,5	0.46	0
6	GOL	A	970	-	5,5,5	0.35	0	5,5,5	0.74	0
6	GOL	A	976[B]	-	5,5,5	0.38	0	5,5,5	0.23	0
6	GOL	A	974	-	5,5,5	0.38	0	5,5,5	0.42	0
6	GOL	A	971	-	5,5,5	0.35	0	5,5,5	0.90	0
5	MLI	A	992	-	6,6,6	1.18	0	7,7,7	0.82	0
4	LYS	A	960	2	8,9,9	0.89	1 (12%)	9,10,10	0.87	0
6	GOL	A	972[A]	-	5,5,5	0.39	0	5,5,5	0.31	0

Mol	Type	Chain	Res	Link	Bond lengths			Bond angles		
					Counts	RMSZ	$\#\|Z\| > 2$	Counts	RMSZ	$\#\|Z\| > 2$
6	GOL	A	975[B]	-	5,5,5	0.35	0	5,5,5	0.28	0
6	GOL	A	977	-	5,5,5	0.39	0	5,5,5	0.39	0
6	GOL	A	978[A]	-	5,5,5	0.39	0	5,5,5	0.27	0
6	GOL	A	979[A]	-	5,5,5	0.37	0	5,5,5	0.19	0
5	MLI	A	990	-	6,6,6	1.11	0	7,7,7	1.04	0
6	GOL	A	976[A]	-	5,5,5	0.38	0	5,5,5	0.18	0
6	GOL	A	972[B]	-	5,5,5	0.38	0	5,5,5	0.20	0
5	MLI	A	991	-	6,6,6	1.04	0	7,7,7	1.17	0
6	GOL	A	978[B]	-	5,5,5	0.33	0	5,5,5	0.28	0
6	GOL	A	979[B]	-	5,5,5	0.37	0	5,5,5	0.31	0

In the following table, the Chirals column lists the number of chiral outliers, the number of chiral centers analysed, the number of these observed in the model and the number defined in the Chemical Component Dictionary. Similar counts are reported in the Torsion and Rings columns. '-' means no outliers of that kind were identified.

Mol	Type	Chain	Res	Link	Chirals	Torsions	Rings
6	GOL	A	975[A]	-	-	2/4/4/4	-
6	GOL	A	970	-	-	2/4/4/4	-
6	GOL	A	976[B]	-	-	2/4/4/4	-
6	GOL	A	974	-	-	0/4/4/4	-
6	GOL	A	971	-	-	3/4/4/4	-
5	MLI	A	992	-	-	0/4/4/4	-
4	LYS	A	960	2	-	0/9/9/9	-
6	GOL	A	972[A]	-	-	2/4/4/4	-
6	GOL	A	975[B]	-	-	2/4/4/4	-
6	GOL	A	977	-	-	2/4/4/4	-
6	GOL	A	978[A]	-	-	4/4/4/4	-
6	GOL	A	979[A]	-	-	0/4/4/4	-
5	MLI	A	990	-	-	0/4/4/4	-
6	GOL	A	976[A]	-	-	2/4/4/4	-
6	GOL	A	972[B]	-	-	0/4/4/4	-
5	MLI	A	991	-	-	0/4/4/4	-
6	GOL	A	978[B]	-	-	4/4/4/4	-
6	GOL	A	979[B]	-	-	0/4/4/4	-

All (1) bond length outliers are listed below:

Mol	Chain	Res	Type	Atoms	Z	Observed(Å)	Ideal(Å)
4	A	960	LYS	OXT-C	-2.04	1.23	1.30

There are no bond angle outliers.

There are no chirality outliers.

All (25) torsion outliers are listed below:

Mol	Chain	Res	Type	Atoms
6	A	970	GOL	O1-C1-C2-C3
6	A	971	GOL	O1-C1-C2-C3
6	A	972[A]	GOL	C1-C2-C3-O3
6	A	975[A]	GOL	C1-C2-C3-O3
6	A	975[B]	GOL	O1-C1-C2-C3
6	A	977	GOL	C1-C2-C3-O3
6	A	978[A]	GOL	O1-C1-C2-C3
6	A	978[B]	GOL	O1-C1-C2-C3
6	A	978[B]	GOL	C1-C2-C3-O3
6	A	977	GOL	O2-C2-C3-O3
6	A	976[A]	GOL	O1-C1-C2-C3
6	A	976[B]	GOL	O1-C1-C2-C3
6	A	978[A]	GOL	C1-C2-C3-O3
6	A	970	GOL	O1-C1-C2-O2
6	A	971	GOL	O1-C1-C2-O2
6	A	972[A]	GOL	O2-C2-C3-O3
6	A	975[A]	GOL	O2-C2-C3-O3
6	A	975[B]	GOL	O1-C1-C2-O2
6	A	976[A]	GOL	O1-C1-C2-O2
6	A	978[A]	GOL	O1-C1-C2-O2
6	A	978[B]	GOL	O1-C1-C2-O2
6	A	978[B]	GOL	O2-C2-C3-O3
6	A	971	GOL	O2-C2-C3-O3
6	A	976[B]	GOL	O1-C1-C2-O2
6	A	978[A]	GOL	O2-C2-C3-O3

There are no ring outliers.

7 monomers are involved in 11 short contacts:

Mol	Chain	Res	Type	Clashes	Symm-Clashes
6	A	976[B]	GOL	1	0
6	A	974	GOL	1	0
6	A	971	GOL	1	0
6	A	975[B]	GOL	3	0
5	A	990	MLI	1	0
6	A	976[A]	GOL	2	0
6	A	972[B]	GOL	2	0

5.7 Other polymers (i)

There are no such residues in this entry.

5.8 Polymer linkage issues (i)

There are no chain breaks in this entry.

6 Fit of model and data (i)

6.1 Protein, DNA and RNA chains (i)

In the following table, the column labelled '#RSRZ> 2' contains the number (and percentage) of RSRZ outliers, followed by percent RSRZ outliers for the chain as percentile scores relative to all X-ray entries and entries of similar resolution. The OWAB column contains the minimum, median, 95th percentile and maximum values of the occupancy-weighted average B-factor per residue. The column labelled 'Q< 0.9' lists the number of (and percentage) of residues with an average occupancy less than 0.9.

Mol	Chain	Analysed	<RSRZ>	#RSRZ>2	OWAB(Å^2)	Q<0.9
1	A	866/891 (97%)	-0.30	15 (1%) 70 75	8, 14, 23, 34	0

All (15) RSRZ outliers are listed below:

Mol	Chain	Res	Type	RSRZ
1	A	504	HIS	6.0
1	A	503	GLY	4.9
1	A	606	GLU	4.3
1	A	169	ASN	4.2
1	A	168	GLU	4.1
1	A	694	HIS	3.3
1	A	502	GLY	3.3
1	A	855	GLU	3.2
1	A	505	PRO	3.0
1	A	493	GLU	2.8
1	A	457	GLU	2.7
1	A	607	LYS	2.4
1	A	525	TYR	2.4
1	A	856	ASN	2.1
1	A	501	LYS	2.0

6.2 Non-standard residues in protein, DNA, RNA chains (i)

There are no non-standard protein/DNA/RNA residues in this entry.

6.3 Carbohydrates (i)

There are no monosaccharides in this entry.

6.4 Ligands (i)

In the following table, the Atoms column lists the number of modelled atoms in the group and the number defined in the chemical component dictionary. The B-factors column lists the minimum, median, 95th percentile and maximum values of B factors of atoms in the group. The column labelled 'Q< 0.9' lists the number of atoms with occupancy less than 0.9.

Mol	Type	Chain	Res	Atoms	RSCC	RSR	B-factors(Å^2)	Q<0.9
5	MLI	A	992	7/7	0.53	0.27	30,31,32,32	0
6	GOL	A	979[A]	6/6	0.56	0.27	47,49,49,49	6
6	GOL	A	979[B]	6/6	0.56	0.27	14,17,18,18	6
6	GOL	A	978[B]	6/6	0.81	0.26	17,18,18,18	6
6	GOL	A	977	6/6	0.81	0.21	38,39,40,41	0
6	GOL	A	978[A]	6/6	0.81	0.26	63,63,63,64	6
6	GOL	A	970	6/6	0.84	0.13	23,27,27,28	0
5	MLI	A	991	7/7	0.86	0.14	30,31,33,33	0
6	GOL	A	974	6/6	0.88	0.17	14,16,16,17	6
6	GOL	A	971	6/6	0.88	0.13	19,26,28,28	0
6	GOL	A	972[A]	6/6	0.91	0.15	23,29,30,31	6
6	GOL	A	972[B]	6/6	0.91	0.15	29,31,31,31	6
6	GOL	A	975[B]	6/6	0.93	0.27	37,38,38,39	6
6	GOL	A	976[A]	6/6	0.93	0.22	23,24,24,24	6
6	GOL	A	976[B]	6/6	0.93	0.22	32,33,33,33	6
6	GOL	A	975[A]	6/6	0.93	0.27	20,24,24,25	6
4	LYS	A	960	10/10	0.97	0.10	10,11,12,13	0
5	MLI	A	990	7/7	0.98	0.06	15,15,16,16	7
3	NA	A	952	1/1	0.99	0.10	23,23,23,23	0
3	NA	A	951	1/1	1.00	0.05	17,17,17,17	0
2	ZN	A	950	1/1	1.00	0.07	9,9,9,9	0

6.5 Other polymers (i)

There are no such residues in this entry.