Full wwPDB X-ray Structure Validation Report (i)

Feb 22, 2021 – 09:20 AM GMT

PDB ID	:	7AW2
Title	:	MerTK kinase domain with type 1.5 inhibitor from a DNA-encoded library
Authors	:	Schimpl, M.; Nissink, J.W.M.; Blackett, C.; Goldberg, K.; Hennessy, E.J.; Hardaker, E.; McCoull, W.; McMurray, L.; Collingwood, O.; Overman, R.; Pflug, A.; Preston, M.; Rawlins, P.; Rivers, E.; Smith, P.; Underwood, E.; Truman, C.; Warwicker, J.; Winter, J.; Woodcock, S.
Deposited on	:	2020-11-06
Resolution	:	2.10 Å(reported)

This is a Full wwPDB X-ray Structure Validation Report for a publicly released PDB entry.

We welcome your comments at *validation@mail.wwpdb.org*
A user guide is available at
https://www.wwpdb.org/validation/2017/XrayValidationReportHelp
with specific help available everywhere you see the (i) symbol.

The following versions of software and data (see references (i)) were used in the production of this report:

MolProbity	:	4.02b-467
Mogul	:	1.8.5 (274361), CSD as541be (2020)
Xtriage (Phenix)	:	1.13
EDS	:	2.17.1.dev1
buster-report	:	1.1.7 (2018)
Percentile statistics	:	20191225.v01 (using entries in the PDB archive December 25th 2019)
Refmac	:	5.8.0158
CCP4	:	7.0.044 (Gargrove)
Ideal geometry (proteins)	:	Engh & Huber (2001)
Ideal geometry (DNA, RNA)	:	Parkinson et al. (1996)
Validation Pipeline (wwPDB-VP)	:	2.17.1.dev1

1 Overall quality at a glance (i)

The following experimental techniques were used to determine the structure:
X-RAY DIFFRACTION

The reported resolution of this entry is 2.10 Å.

Percentile scores (ranging between 0-100) for global validation metrics of the entry are shown in the following graphic. The table shows the number of entries on which the scores are based.

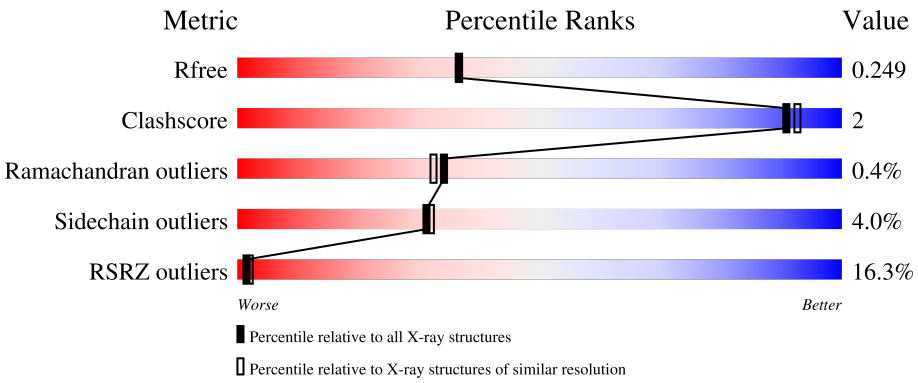

Metric	Whole archive (#Entries)	Similar resolution (#Entries, resolution range(Å))
R_{free}	130704	5197 (2.10-2.10)
Clashscore	141614	5710 (2.10-2.10)
Ramachandran outliers	138981	5647 (2.10-2.10)
Sidechain outliers	138945	5648 (2.10-2.10)
RSRZ outliers	127900	5083 (2.10-2.10)

The table below summarises the geometric issues observed across the polymeric chains and their fit to the electron density. The red, orange, yellow and green segments of the lower bar indicate the fraction of residues that contain outliers for >=3, 2, 1 and 0 types of geometric quality criteria respectively. A grey segment represents the fraction of residues that are not modelled. The numeric value for each fraction is indicated below the corresponding segment, with a dot representing fractions <=5% The upper red bar (where present) indicates the fraction of residues that have poor fit to the electron density. The numeric value is given above the bar.

Mol	Chain	Length	Quality of chain
1	A	298	15% 83% 8% 9%

2 Entry composition (i)

There are 3 unique types of molecules in this entry. The entry contains 2202 atoms, of which 0 are hydrogens and 0 are deuteriums.

In the tables below, the ZeroOcc column contains the number of atoms modelled with zero occupancy, the AltConf column contains the number of residues with at least one atom in alternate conformation and the Trace column contains the number of residues modelled with at most 2 atoms.

- Molecule 1 is a protein called Tyrosine-protein kinase Mer.

Mol	Chain	Residues	Atoms					ZeroOcc	AltConf	Trace
			Total	C	N	O	S			
1	A	270	2103	1344	355	384	20	0	0	0

There are 8 discrepancies between the modelled and reference sequences:

Chain	Residue	Modelled	Actual	Comment	Reference
A	567	GLY	-	expression tag	UNP Q12866
A	568	SER	-	expression tag	UNP Q12866
A	569	HIS	-	expression tag	UNP Q12866
A	570	MET	-	expression tag	UNP Q12866
A	591	ARG	LYS	engineered mutation	UNP Q12866
A	693	ARG	LYS	engineered mutation	UNP Q12866
A	702	ARG	LYS	engineered mutation	UNP Q12866
A	856	ARG	LYS	engineered mutation	UNP Q12866

- Molecule 2 is 5-(2'-chloro-[1,1'-biphenyl]-4-yl)-N-(imidazo[1,2-a]pyridin-6-ylmethyl)-N-methyl-1,3,4-oxadiazol-2-amine (three-letter code: S4W) (formula: $C_{23}H_{18}ClN_5O$) (labeled as "Ligand of Interest" by depositor).

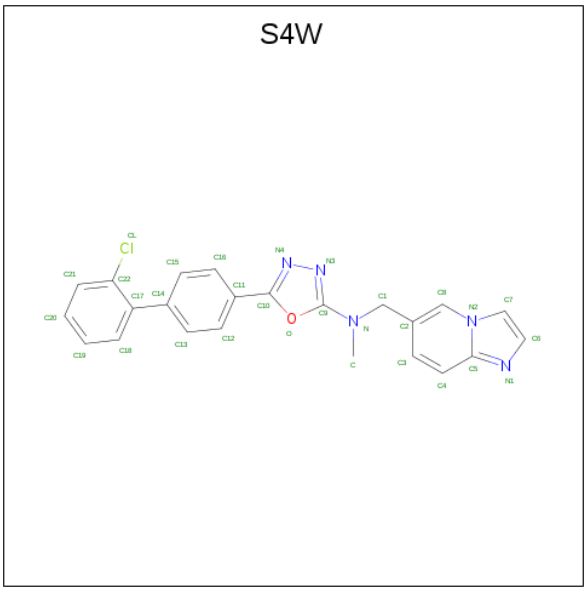

Mol	Chain	Residues	Atoms					ZeroOcc	AltConf
			Total	C	Cl	N	O		
2	A	1	30	23	1	5	1	0	0

- Molecule 3 is water.

Mol	Chain	Residues	Atoms		ZeroOcc	AltConf
			Total	O		
3	A	69	69	69	0	0

3 Residue-property plots (i)

These plots are drawn for all protein, RNA, DNA and oligosaccharide chains in the entry. The first graphic for a chain summarises the proportions of the various outlier classes displayed in the second graphic. The second graphic shows the sequence view annotated by issues in geometry and electron density. Residues are color-coded according to the number of geometric quality criteria for which they contain at least one outlier: green = 0, yellow = 1, orange = 2 and red = 3 or more. A red dot above a residue indicates a poor fit to the electron density (RSRZ > 2). Stretches of 2 or more consecutive residues without any outlier are shown as a green connector. Residues present in the sample, but not in the model, are shown in grey.

- Molecule 1: Tyrosine-protein kinase Mer

Chain A:

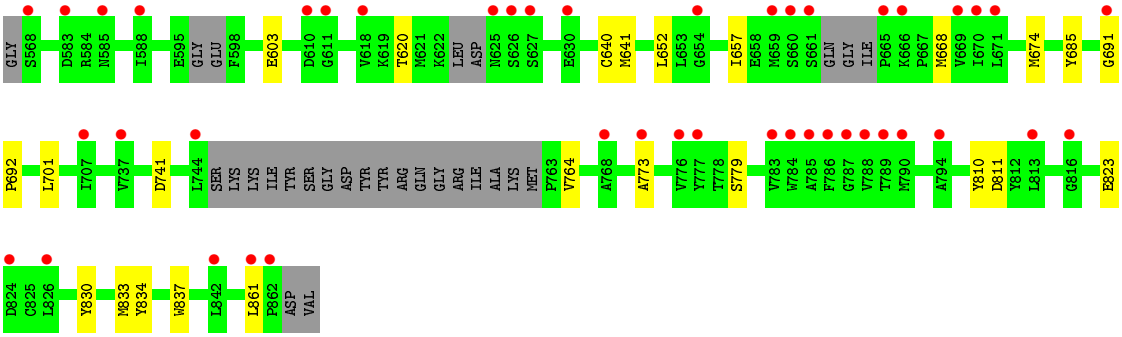

4 Data and refinement statistics (i)

Property	Value	Source
Space group	C 2 2 21	Depositor
Cell constants a, b, c, α, β, γ	92.28Å 94.35Å 71.37Å 90.00° 90.00° 90.00°	Depositor
Resolution (Å)	20.73 – 2.10 20.72 – 2.10	Depositor EDS
% Data completeness (in resolution range)	99.7 (20.73-2.10) 99.7 (20.72-2.10)	Depositor EDS
R_{merge}	0.06	Depositor
R_{sym}	(Not available)	Depositor
$< I/\sigma(I) >$ [1]	1.23 (at 2.09Å)	Xtriage
Refinement program	BUSTER 2.11.7	Depositor
R, R_{free}	0.207 , 0.238 0.212 , 0.249	Depositor DCC
R_{free} test set	927 reflections (5.00%)	wwPDB-VP
Wilson B-factor (Å^2)	52.3	Xtriage
Anisotropy	0.463	Xtriage
Bulk solvent k_{sol}(e/Å^3), B_{sol}(Å^2)	0.35 , 59.6	EDS
L-test for twinning[2]	$< \|L\| > = 0.50$, $< L^2 > = 0.34$	Xtriage
Estimated twinning fraction	0.027 for -k,-h,-l	Xtriage
F_o,F_c correlation	0.96	EDS
Total number of atoms	2202	wwPDB-VP
Average B, all atoms (Å^2)	65.0	wwPDB-VP

Xtriage's analysis on translational NCS is as follows: *The largest off-origin peak in the Patterson function is 5.67% of the height of the origin peak. No significant pseudotranslation is detected.*

[1] Intensities estimated from amplitudes.

[2] Theoretical values of $< |L| >$, $< L^2 >$ for acentric reflections are 0.5, 0.333 respectively for untwinned datasets, and 0.375, 0.2 for perfectly twinned datasets.

5 Model quality (i)

5.1 Standard geometry (i)

Bond lengths and bond angles in the following residue types are not validated in this section: S4W

The Z score for a bond length (or angle) is the number of standard deviations the observed value is removed from the expected value. A bond length (or angle) with $|Z| > 5$ is considered an outlier worth inspection. RMSZ is the root-mean-square of all Z scores of the bond lengths (or angles).

Mol	Chain	Bond lengths		Bond angles	
		RMSZ	$\#\|Z\| >5$	RMSZ	$\#\|Z\| >5$
1	A	0.51	0/2145	0.64	0/2904

There are no bond length outliers.

There are no bond angle outliers.

There are no chirality outliers.

There are no planarity outliers.

5.2 Too-close contacts (i)

In the following table, the Non-H and H(model) columns list the number of non-hydrogen atoms and hydrogen atoms in the chain respectively. The H(added) column lists the number of hydrogen atoms added and optimized by MolProbity. The Clashes column lists the number of clashes within the asymmetric unit, whereas Symm-Clashes lists symmetry-related clashes.

Mol	Chain	Non-H	H(model)	H(added)	Clashes	Symm-Clashes
1	A	2103	0	2048	7	0
2	A	30	0	0	0	0
3	A	69	0	0	0	0
All	All	2202	0	2048	7	0

The all-atom clashscore is defined as the number of clashes found per 1000 atoms (including hydrogen atoms). The all-atom clashscore for this structure is 2.

All (7) close contacts within the same asymmetric unit are listed below, sorted by their clash magnitude.

Atom-1	Atom-2	Interatomic distance (Å)	Clash overlap (Å)
1:A:685:TYR:HB3	1:A:692:PRO:HD2	1.90	0.54

Continued on next page...

Continued from previous page...

Atom-1	Atom-2	Interatomic distance (Å)	Clash overlap (Å)
1:A:620:THR:HG22	1:A:668:MET:HG2	1.91	0.52
1:A:701:LEU:HD12	1:A:861:LEU:HD11	1.97	0.46
1:A:834:TYR:HA	1:A:837:TRP:CE3	2.51	0.45
1:A:830:TYR:HA	1:A:833:MET:HG2	2.01	0.42
1:A:641:MET:HB3	1:A:652:LEU:HD22	2.02	0.42
1:A:773:ALA:HB2	1:A:810:TYR:CE1	2.54	0.42

There are no symmetry-related clashes.

5.3 Torsion angles (i)

5.3.1 Protein backbone (i)

In the following table, the Percentiles column shows the percent Ramachandran outliers of the chain as a percentile score with respect to all X-ray entries followed by that with respect to entries of similar resolution.

The Analysed column shows the number of residues for which the backbone conformation was analysed, and the total number of residues.

Mol	Chain	Analysed	Favoured	Allowed	Outliers	Percentiles
1	A	260/298 (87%)	254 (98%)	5 (2%)	1 (0%)	34 32

All (1) Ramachandran outliers are listed below:

Mol	Chain	Res	Type
1	A	691	GLY

5.3.2 Protein sidechains (i)

In the following table, the Percentiles column shows the percent sidechain outliers of the chain as a percentile score with respect to all X-ray entries followed by that with respect to entries of similar resolution.

The Analysed column shows the number of residues for which the sidechain conformation was analysed, and the total number of residues.

Mol	Chain	Analysed	Rotameric	Outliers	Percentiles
1	A	225/267 (84%)	216 (96%)	9 (4%)	31 32

All (9) residues with a non-rotameric sidechain are listed below:

Mol	Chain	Res	Type
1	A	603	GLU
1	A	640	CYS
1	A	657	ILE
1	A	674	MET
1	A	741	ASP
1	A	764	VAL
1	A	779	SER
1	A	811	ASP
1	A	823	GLU

Sometimes sidechains can be flipped to improve hydrogen bonding and reduce clashes. All (1) such sidechains are listed below:

Mol	Chain	Res	Type
1	A	806	ASN

5.3.3 RNA (i)

There are no RNA molecules in this entry.

5.4 Non-standard residues in protein, DNA, RNA chains (i)

There are no non-standard protein/DNA/RNA residues in this entry.

5.5 Carbohydrates (i)

There are no monosaccharides in this entry.

5.6 Ligand geometry (i)

1 ligand is modelled in this entry.

In the following table, the Counts columns list the number of bonds (or angles) for which Mogul statistics could be retrieved, the number of bonds (or angles) that are observed in the model and the number of bonds (or angles) that are defined in the Chemical Component Dictionary. The Link column lists molecule types, if any, to which the group is linked. The Z score for a bond length (or angle) is the number of standard deviations the observed value is removed from the expected value. A bond length (or angle) with $|Z| > 2$ is considered an outlier worth inspection. RMSZ is the root-mean-square of all Z scores of the bond lengths (or angles).

Mol	Type	Chain	Res	Link	Bond lengths			Bond angles		
					Counts	RMSZ	$\#\|Z\| > 2$	Counts	RMSZ	$\#\|Z\| > 2$
2	S4W	A	901	-	26,34,34	0.90	1 (3%)	34,48,48	0.85	2 (5%)

In the following table, the Chirals column lists the number of chiral outliers, the number of chiral centers analysed, the number of these observed in the model and the number defined in the Chemical Component Dictionary. Similar counts are reported in the Torsion and Rings columns. '-' means no outliers of that kind were identified.

Mol	Type	Chain	Res	Link	Chirals	Torsions	Rings
2	S4W	A	901	-	-	0/10/16/16	0/5/5/5

All (1) bond length outliers are listed below:

Mol	Chain	Res	Type	Atoms	Z	Observed(Å)	Ideal(Å)
2	A	901	S4W	C3-C2	3.20	1.45	1.38

All (2) bond angle outliers are listed below:

Mol	Chain	Res	Type	Atoms	Z	Observed(^{o})	Ideal(^{o})
2	A	901	S4W	C11-C10-N4	2.90	129.03	124.12
2	A	901	S4W	C2-C1-N	2.08	116.40	113.81

There are no chirality outliers.

There are no torsion outliers.

There are no ring outliers.

No monomer is involved in short contacts.

The following is a two-dimensional graphical depiction of Mogul quality analysis of bond lengths, bond angles, torsion angles, and ring geometry for all instances of the Ligand of Interest. In addition, ligands with molecular weight > 250 and outliers as shown on the validation Tables will also be included. For torsion angles, if less then 5% of the Mogul distribution of torsion angles is within 10 degrees of the torsion angle in question, then that torsion angle is considered an outlier. Any bond that is central to one or more torsion angles identified as an outlier by Mogul will be highlighted in the graph. For rings, the root-mean-square deviation (RMSD) between the ring in question and similar rings identified by Mogul is calculated over all ring torsion angles. If the average RMSD is greater than 60 degrees and the minimal RMSD between the ring in question and any Mogul-identified rings is also greater than 60 degrees, then that ring is considered an outlier. The outliers are highlighted in purple. The color gray indicates Mogul did not find sufficient equivalents in the CSD to analyse the geometry.

Ligand S4W A 901

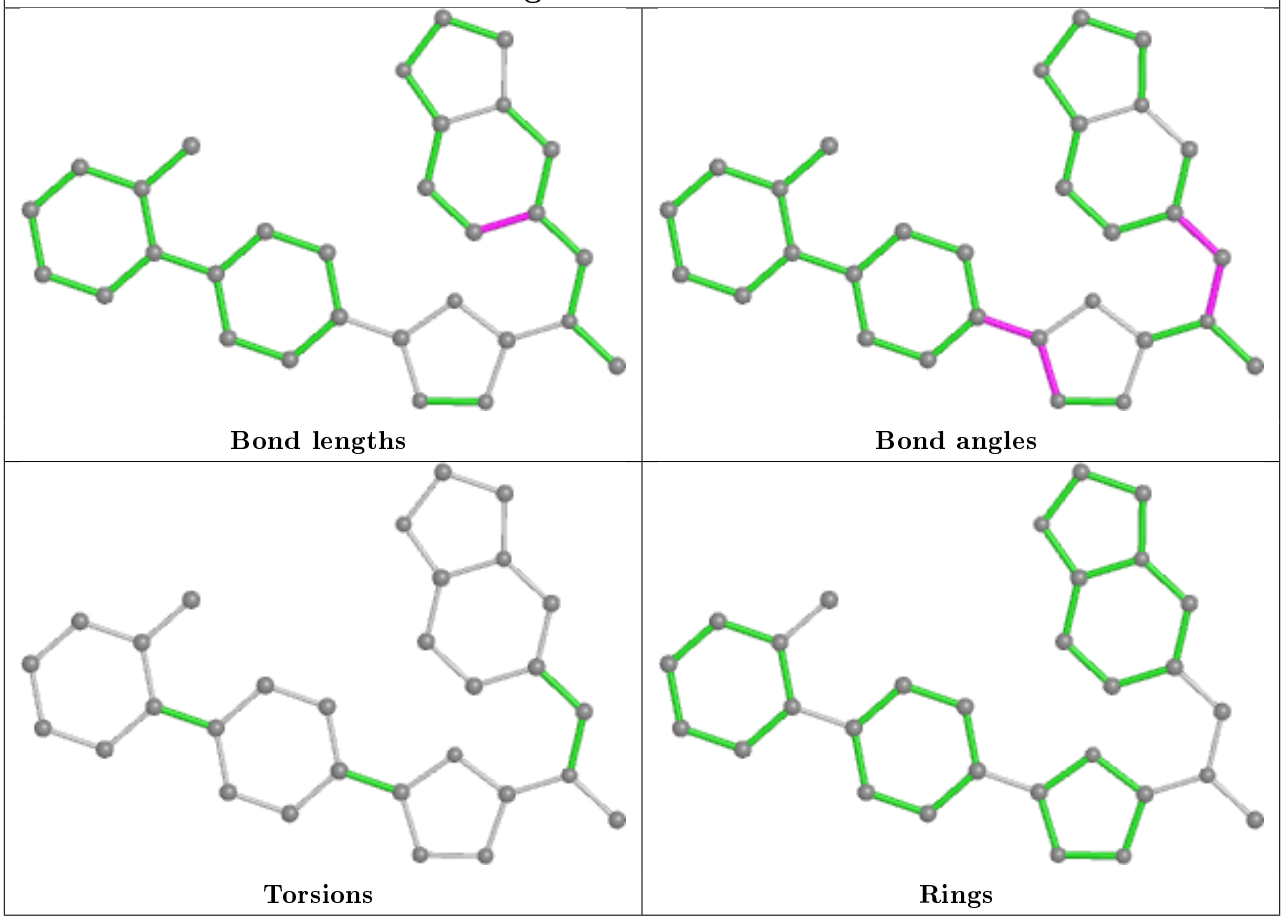

5.7 Other polymers (i)

There are no such residues in this entry.

5.8 Polymer linkage issues (i)

There are no chain breaks in this entry.

6 Fit of model and data (i)

6.1 Protein, DNA and RNA chains (i)

In the following table, the column labelled '#RSRZ> 2' contains the number (and percentage) of RSRZ outliers, followed by percent RSRZ outliers for the chain as percentile scores relative to all X-ray entries and entries of similar resolution. The OWAB column contains the minimum, median, 95th percentile and maximum values of the occupancy-weighted average B-factor per residue. The column labelled 'Q< 0.9' lists the number of (and percentage) of residues with an average occupancy less than 0.9.

Mol	Chain	Analysed	<RSRZ>	#RSRZ>2	OWAB(Å^2)	Q<0.9
1	A	270/298 (90%)	0.79	44 (16%) 1 2	40, 64, 98, 130	0

All (44) RSRZ outliers are listed below:

Mol	Chain	Res	Type	RSRZ
1	A	627	SER	8.4
1	A	626	SER	7.1
1	A	660	SER	5.3
1	A	661	SER	4.9
1	A	744	LEU	4.9
1	A	665	PRO	4.7
1	A	669	VAL	4.6
1	A	773	ALA	4.6
1	A	788	VAL	4.1
1	A	777	TYR	3.8
1	A	842	LEU	3.7
1	A	659	MET	3.5
1	A	630	GLU	3.2
1	A	585	ASN	3.2
1	A	670	ILE	3.2
1	A	862	PRO	3.1
1	A	776	VAL	3.1
1	A	671	LEU	3.1
1	A	786	PHE	3.0
1	A	611	GLY	3.0
1	A	568	SER	2.8
1	A	768	ALA	2.8
1	A	824	ASP	2.5
1	A	789	THR	2.5
1	A	625	ASN	2.5
1	A	610	ASP	2.5
1	A	790	MET	2.4

Continued on next page...

Continued from previous page...

Mol	Chain	Res	Type	RSRZ
1	A	787	GLY	2.4
1	A	618	VAL	2.4
1	A	707	ILE	2.4
1	A	861	LEU	2.4
1	A	583	ASP	2.4
1	A	813	LEU	2.3
1	A	784	TRP	2.3
1	A	785	ALA	2.3
1	A	666	LYS	2.3
1	A	691	GLY	2.1
1	A	816	GLY	2.1
1	A	588	ILE	2.1
1	A	826	LEU	2.1
1	A	654	GLY	2.1
1	A	737	VAL	2.0
1	A	783	VAL	2.0
1	A	794	ALA	2.0

6.2 Non-standard residues in protein, DNA, RNA chains (i)

There are no non-standard protein/DNA/RNA residues in this entry.

6.3 Carbohydrates (i)

There are no monosaccharides in this entry.

6.4 Ligands (i)

In the following table, the Atoms column lists the number of modelled atoms in the group and the number defined in the chemical component dictionary. The B-factors column lists the minimum, median, 95th percentile and maximum values of B factors of atoms in the group. The column labelled 'Q< 0.9' lists the number of atoms with occupancy less than 0.9.

Mol	Type	Chain	Res	Atoms	RSCC	RSR	B-factors(Å^2)	Q<0.9
2	S4W	A	901	30/30	0.93	0.13	46,51,68,70	0

The following is a graphical depiction of the model fit to experimental electron density of all instances of the Ligand of Interest. In addition, ligands with molecular weight > 250 and outliers as shown on the geometry validation Tables will also be included. Each fit is shown from different orientation to approximate a three-dimensional view.

Electron density around S4W A 901:

$2mF_o$-DF_c (at 0.7 rmsd) in gray
mF_o-DF_c (at 3 rmsd) in purple (negative)
and green (positive)

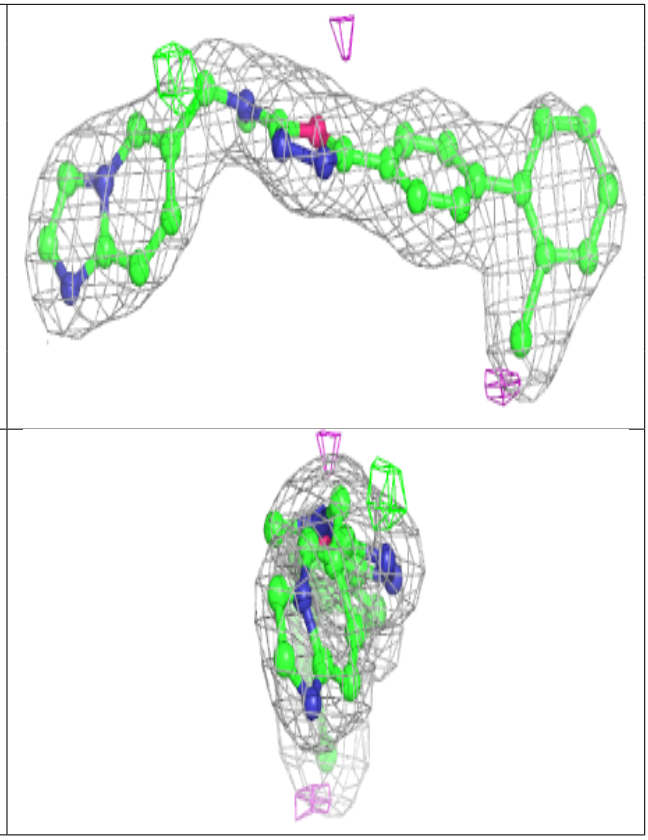

6.5 Other polymers (i)

There are no such residues in this entry.