Full wwPDB X-ray Structure Validation Report (i)

Apr 30, 2024 – 11:54 pm BST

PDB ID	:	3ZI0
Title	:	Structure of Mycobacterium tuberculosis DXR in complex with a fosmidomycin analogue
Authors	:	Bjorkelid, C.; Jansson, A.M.; Bergfors, T.; Unge, T.; Mowbray, S.L.; Jones, T.A.
Deposited on	:	2012-12-30
Resolution	:	1.90 Å(reported)

This is a Full wwPDB X-ray Structure Validation Report for a publicly released PDB entry.

We welcome your comments at *validation@mail.wwpdb.org*
A user guide is available at
https://www.wwpdb.org/validation/2017/XrayValidationReportHelp
with specific help available everywhere you see the (i) symbol.

The types of validation reports are described at
http://www.wwpdb.org/validation/2017/FAQs#types.

The following versions of software and data (see references (i)) were used in the production of this report:

MolProbity	:	4.02b-467
Mogul	:	1.8.4, CSD as541be (2020)
Xtriage (Phenix)	:	1.13
EDS	:	2.36.2
buster-report	:	1.1.7 (2018)
Percentile statistics	:	20191225.v01 (using entries in the PDB archive December 25th 2019)
Refmac	:	5.8.0158
CCP4	:	7.0.044 (Gargrove)
Ideal geometry (proteins)	:	Engh & Huber (2001)
Ideal geometry (DNA, RNA)	:	Parkinson et al. (1996)
Validation Pipeline (wwPDB-VP)	:	2.36.2

1 Overall quality at a glance (i)

The following experimental techniques were used to determine the structure:
X-RAY DIFFRACTION

The reported resolution of this entry is 1.90 Å.

Percentile scores (ranging between 0-100) for global validation metrics of the entry are shown in the following graphic. The table shows the number of entries on which the scores are based.

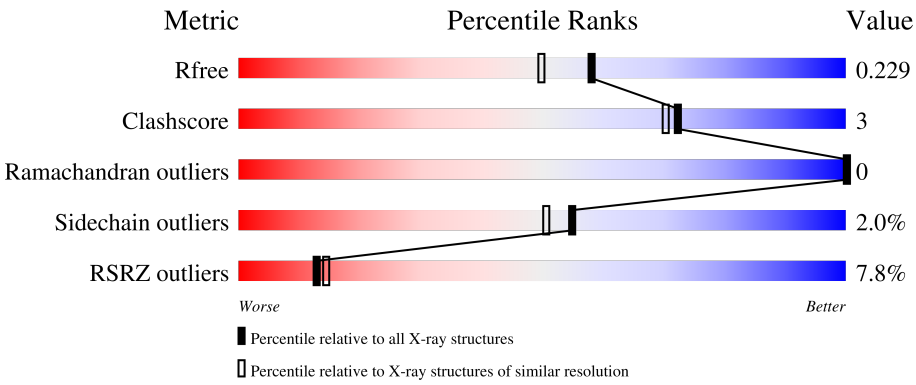

Metric	Whole archive (#Entries)	Similar resolution (#Entries, resolution range(Å))
R_{free}	130704	6207 (1.90-1.90)
Clashscore	141614	6847 (1.90-1.90)
Ramachandran outliers	138981	6760 (1.90-1.90)
Sidechain outliers	138945	6760 (1.90-1.90)
RSRZ outliers	127900	6082 (1.90-1.90)

The table below summarises the geometric issues observed across the polymeric chains and their fit to the electron density. The red, orange, yellow and green segments of the lower bar indicate the fraction of residues that contain outliers for >=3, 2, 1 and 0 types of geometric quality criteria respectively. A grey segment represents the fraction of residues that are not modelled. The numeric value for each fraction is indicated below the corresponding segment, with a dot representing fractions <=5% The upper red bar (where present) indicates the fraction of residues that have poor fit to the electron density. The numeric value is given above the bar.

Mol	Chain	Length	Quality of chain
1	A	397	13%, 84%, 6%, 10%
1	B	397	2%, 87%, 7%, • 6%

2 Entry composition (i)

There are 4 unique types of molecules in this entry. The entry contains 5596 atoms, of which 0 are hydrogens and 0 are deuteriums.

In the tables below, the ZeroOcc column contains the number of atoms modelled with zero occupancy, the AltConf column contains the number of residues with at least one atom in alternate conformation and the Trace column contains the number of residues modelled with at most 2 atoms.

- Molecule 1 is a protein called 1-DEOXY-D-XYLULOSE 5-PHOSPHATE REDUCTOISOMERASE.

Mol	Chain	Residues	Atoms					ZeroOcc	AltConf	Trace
			Total	C	N	O	S			
1	A	357	2638	1658	473	499	8	0	2	0
1	B	373	2771	1735	503	525	8	0	3	0

There are 18 discrepancies between the modelled and reference sequences:

Chain	Residue	Modelled	Actual	Comment	Reference
A	-7	MET	-	expression tag	UNP P64012
A	-6	ALA	-	expression tag	UNP P64012
A	-5	HIS	-	expression tag	UNP P64012
A	-4	HIS	-	expression tag	UNP P64012
A	-3	HIS	-	expression tag	UNP P64012
A	-2	HIS	-	expression tag	UNP P64012
A	-1	HIS	-	expression tag	UNP P64012
A	0	HIS	-	expression tag	UNP P64012
A	1	VAL	-	expression tag	UNP P64012
B	-7	MET	-	expression tag	UNP P64012
B	-6	ALA	-	expression tag	UNP P64012
B	-5	HIS	-	expression tag	UNP P64012
B	-4	HIS	-	expression tag	UNP P64012
B	-3	HIS	-	expression tag	UNP P64012
B	-2	HIS	-	expression tag	UNP P64012
B	-1	HIS	-	expression tag	UNP P64012
B	0	HIS	-	expression tag	UNP P64012
B	1	VAL	-	expression tag	UNP P64012

- Molecule 2 is [(1S)-1-(3,4-dichlorophenyl)-3-{hydroxy[2-(1H-1,2,4-triazol-1-ylmethyl)benzoyl]amino}propyl]phosphonic acid (three-letter code: FM8) (formula: $C_{19}H_{19}Cl_2N_4O_5P$).

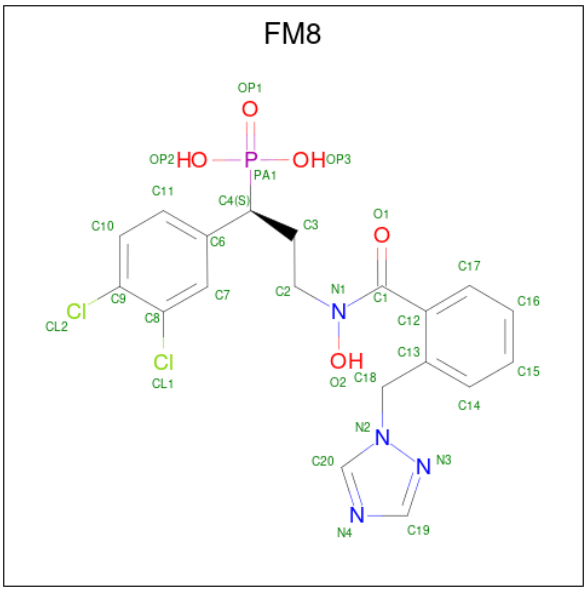

Mol	Chain	Residues	Atoms						ZeroOcc	AltConf
			Total	C	Cl	N	O	P		
2	A	1	31	19	2	4	5	1	0	0

- Molecule 3 is MANGANESE (II) ION (three-letter code: MN) (formula: Mn).

Mol	Chain	Residues	Atoms		ZeroOcc	AltConf
			Total	Mn		
3	B	1	1	1	0	0

- Molecule 4 is water.

Mol	Chain	Residues	Atoms		ZeroOcc	AltConf
			Total	O		
4	A	49	49	49	0	0
			Total	O		
4	B	106	106	106	0	0

3 Residue-property plots (i)

These plots are drawn for all protein, RNA, DNA and oligosaccharide chains in the entry. The first graphic for a chain summarises the proportions of the various outlier classes displayed in the second graphic. The second graphic shows the sequence view annotated by issues in geometry and electron density. Residues are color-coded according to the number of geometric quality criteria for which they contain at least one outlier: green = 0, yellow = 1, orange = 2 and red = 3 or more. A red dot above a residue indicates a poor fit to the electron density (RSRZ > 2). Stretches of 2 or more consecutive residues without any outlier are shown as a green connector. Residues present in the sample, but not in the model, are shown in grey.

• Molecule 1: 1-DEOXY-D-XYLULOSE 5-PHOSPHATE REDUCTOISOMERASE

Chain A:

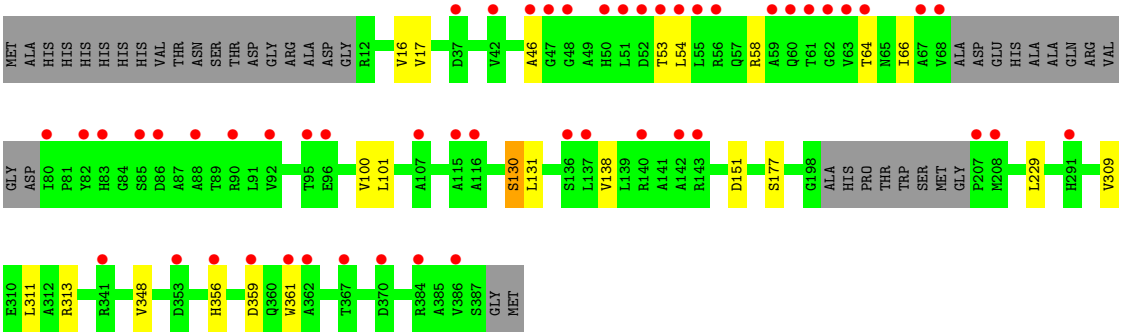

• Molecule 1: 1-DEOXY-D-XYLULOSE 5-PHOSPHATE REDUCTOISOMERASE

Chain B:

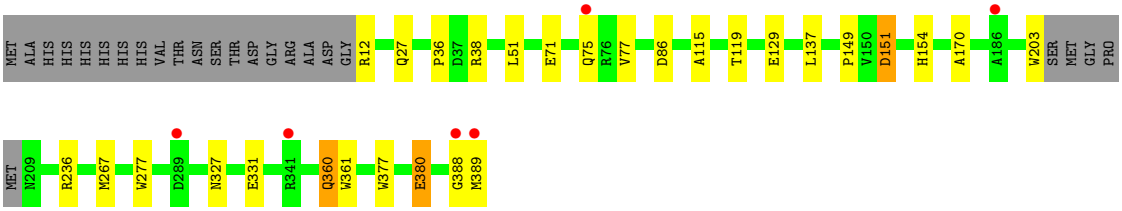

4 Data and refinement statistics (i)

Property	Value	Source
Space group	P 1 21 1	Depositor
Cell constants a, b, c, α, β, γ	67.45Å 68.71Å 85.70Å 90.00° 107.34° 90.00°	Depositor
Resolution (Å)	81.80 – 1.90 52.61 – 1.90	Depositor EDS
% Data completeness (in resolution range)	99.6 (81.80-1.90) 99.6 (52.61-1.90)	Depositor EDS
R_{merge}	0.09	Depositor
R_{sym}	(Not available)	Depositor
$< I/\sigma(I) >$ [1]	2.55 (at 1.90Å)	Xtriage
Refinement program	REFMAC 5.6.0117	Depositor
R, R_{free}	0.205 , 0.231 0.203 , 0.229	Depositor DCC
R_{free} test set	2970 reflections (5.05%)	wwPDB-VP
Wilson B-factor (Å^2)	26.9	Xtriage
Anisotropy	0.559	Xtriage
Bulk solvent k_{sol}(e/Å^3), B_{sol}(Å^2)	0.39 , 48.4	EDS
L-test for twinning[2]	$< \|L\| > = 0.49$, $< L^2 > = 0.32$	Xtriage
Estimated twinning fraction	No twinning to report.	Xtriage
F_o,F_c correlation	0.95	EDS
Total number of atoms	5596	wwPDB-VP
Average B, all atoms (Å^2)	35.0	wwPDB-VP

Xtriage's analysis on translational NCS is as follows: *The largest off-origin peak in the Patterson function is 5.13% of the height of the origin peak. No significant pseudotranslation is detected.*

[1] Intensities estimated from amplitudes.

[2] Theoretical values of $< |L| >$, $< L^2 >$ for acentric reflections are 0.5, 0.333 respectively for untwinned datasets, and 0.375, 0.2 for perfectly twinned datasets.

5 Model quality (i)

5.1 Standard geometry (i)

Bond lengths and bond angles in the following residue types are not validated in this section: FM8, MN

The Z score for a bond length (or angle) is the number of standard deviations the observed value is removed from the expected value. A bond length (or angle) with $|Z| > 5$ is considered an outlier worth inspection. RMSZ is the root-mean-square of all Z scores of the bond lengths (or angles).

Mol	Chain	Bond lengths		Bond angles	
		RMSZ	$\#\|Z\|>5$	RMSZ	$\#\|Z\|>5$
1	A	0.48	1/2685 (0.0%)	0.53	0/3665
1	B	0.54	2/2823 (0.1%)	0.60	0/3855
All	All	0.51	3/5508 (0.1%)	0.56	0/7520

All (3) bond length outliers are listed below:

Mol	Chain	Res	Type	Atoms	Z	Observed(Å)	Ideal(Å)
1	B	277	TRP	CD2-CE2	5.28	1.47	1.41
1	B	203	TRP	CD2-CE2	5.22	1.47	1.41
1	A	361	TRP	CD2-CE2	5.04	1.47	1.41

There are no bond angle outliers.

There are no chirality outliers.

There are no planarity outliers.

5.2 Too-close contacts (i)

In the following table, the Non-H and H(model) columns list the number of non-hydrogen atoms and hydrogen atoms in the chain respectively. The H(added) column lists the number of hydrogen atoms added and optimized by MolProbity. The Clashes column lists the number of clashes within the asymmetric unit, whereas Symm-Clashes lists symmetry-related clashes.

Mol	Chain	Non-H	H(model)	H(added)	Clashes	Symm-Clashes
1	A	2638	0	2646	11	0
1	B	2771	0	2756	26	0
2	A	31	0	17	1	0
3	B	1	0	0	0	0
4	A	49	0	0	0	0
4	B	106	0	0	1	0

Continued on next page...

Continued from previous page...

Mol	Chain	Non-H	H(model)	H(added)	Clashes	Symm-Clashes
All	All	5596	0	5419	37	0

The all-atom clashscore is defined as the number of clashes found per 1000 atoms (including hydrogen atoms). The all-atom clashscore for this structure is 3.

All (37) close contacts within the same asymmetric unit are listed below, sorted by their clash magnitude.

Atom-1	Atom-2	Interatomic distance (Å)	Clash overlap (Å)
1:B:38[B]:ARG:HG2	1:B:38[B]:ARG:HH11	1.28	0.99
1:B:38[B]:ARG:HH11	1:B:38[B]:ARG:CG	1.78	0.97
1:B:388:GLY:HA2	1:B:389:MET:C	1.90	0.92
1:B:51:LEU:HD21	1:B:77:VAL:CG2	2.11	0.81
1:B:38[B]:ARG:HG2	1:B:38[B]:ARG:NH1	1.91	0.79
1:B:360:GLN:H	1:B:360:GLN:HE21	1.33	0.77
1:B:38[B]:ARG:HH11	1:B:38[B]:ARG:CB	2.01	0.73
1:B:377:TRP:O	1:B:380:GLU:HG3	2.01	0.60
1:B:71:GLU:HG3	1:B:75:GLN:HE21	1.68	0.58
1:B:51:LEU:HD21	1:B:77:VAL:HG23	1.88	0.55
1:B:27:GLN:HE22	1:B:267[A]:MET:CE	2.20	0.55
1:B:12:ARG:HD2	1:B:36:PRO:O	2.07	0.53
1:B:51:LEU:HD21	1:B:77:VAL:HG22	1.88	0.51
1:A:58:ARG:HB2	1:A:66:ILE:HD11	1.95	0.49
1:B:170:ALA:O	1:B:236:ARG:HD2	2.14	0.48
1:A:309:VAL:O	1:A:313:ARG:HG3	2.14	0.48
1:B:27:GLN:HE22	1:B:267[A]:MET:HE3	1.79	0.47
1:B:151:ASP:HB2	4:B:2051:HOH:O	2.15	0.47
1:B:38[B]:ARG:HH11	1:B:38[B]:ARG:HB3	1.78	0.47
1:A:311:LEU:HD12	1:A:348:VAL:HG13	1.98	0.45
1:B:38[B]:ARG:NH1	1:B:38[B]:ARG:CB	2.77	0.45
1:A:131:LEU:HD21	1:A:229:LEU:HG	2.00	0.44
1:B:38[B]:ARG:NH1	1:B:38[B]:ARG:HB3	2.33	0.44
1:A:58:ARG:HD2	1:A:64:THR:HG22	2.00	0.43
1:B:115:ALA:O	1:B:119:THR:HG23	2.17	0.43
1:A:16:VAL:HB	1:A:100:VAL:HG22	1.99	0.43
1:B:327:ASN:O	1:B:331:GLU:HG2	2.18	0.43
1:A:17:VAL:HG13	1:A:101:LEU:HD23	2.01	0.43
1:B:360:GLN:H	1:B:360:GLN:NE2	2.09	0.43
1:A:177:SER:HB3	2:A:501:FM8:H11	2.02	0.42
1:B:71:GLU:HG3	1:B:75:GLN:NE2	2.34	0.42
1:A:130:SER:O	1:A:138:VAL:HG21	2.20	0.42
1:A:311:LEU:HD12	1:A:348:VAL:CG1	2.50	0.41

Continued on next page...

Continued from previous page...

Atom-1	Atom-2	Interatomic distance (Å)	Clash overlap (Å)
1:B:149:PRO:HB2	1:B:154:HIS:HB2	2.02	0.41
1:A:46:ALA:HB3	1:A:54:LEU:HD22	2.02	0.41
1:B:360:GLN:HG2	1:B:361:TRP:CD1	2.56	0.40
1:B:38[A]:ARG:HE	1:B:38[A]:ARG:HB3	1.74	0.40

There are no symmetry-related clashes.

5.3 Torsion angles (i)

5.3.1 Protein backbone (i)

In the following table, the Percentiles column shows the percent Ramachandran outliers of the chain as a percentile score with respect to all X-ray entries followed by that with respect to entries of similar resolution.

The Analysed column shows the number of residues for which the backbone conformation was analysed, and the total number of residues.

Mol	Chain	Analysed	Favoured	Allowed	Outliers	Percentiles	
1	A	353/397 (89%)	348 (99%)	5 (1%)	0	100	100
1	B	372/397 (94%)	367 (99%)	5 (1%)	0	100	100
All	All	725/794 (91%)	715 (99%)	10 (1%)	0	100	100

There are no Ramachandran outliers to report.

5.3.2 Protein sidechains (i)

In the following table, the Percentiles column shows the percent sidechain outliers of the chain as a percentile score with respect to all X-ray entries followed by that with respect to entries of similar resolution.

The Analysed column shows the number of residues for which the sidechain conformation was analysed, and the total number of residues.

Mol	Chain	Analysed	Rotameric	Outliers	Percentiles	
1	A	270/297 (91%)	265 (98%)	5 (2%)	57	53
1	B	281/297 (95%)	275 (98%)	6 (2%)	53	48
All	All	551/594 (93%)	540 (98%)	11 (2%)	55	51

All (11) residues with a non-rotameric sidechain are listed below:

Mol	Chain	Res	Type
1	A	53	THR
1	A	130	SER
1	A	151	ASP
1	A	356	HIS
1	A	359	ASP
1	B	86	ASP
1	B	129	GLU
1	B	137	LEU
1	B	151	ASP
1	B	360	GLN
1	B	380	GLU

Sometimes sidechains can be flipped to improve hydrogen bonding and reduce clashes. All (3) such sidechains are listed below:

Mol	Chain	Res	Type
1	B	27	GLN
1	B	75	GLN
1	B	360	GLN

5.3.3 RNA (i)

There are no RNA molecules in this entry.

5.4 Non-standard residues in protein, DNA, RNA chains (i)

There are no non-standard protein/DNA/RNA residues in this entry.

5.5 Carbohydrates (i)

There are no monosaccharides in this entry.

5.6 Ligand geometry (i)

Of 2 ligands modelled in this entry, 1 is monoatomic - leaving 1 for Mogul analysis.

In the following table, the Counts columns list the number of bonds (or angles) for which Mogul statistics could be retrieved, the number of bonds (or angles) that are observed in the model and the number of bonds (or angles) that are defined in the Chemical Component Dictionary. The Link column lists molecule types, if any, to which the group is linked. The Z score for a bond

length (or angle) is the number of standard deviations the observed value is removed from the expected value. A bond length (or angle) with $|Z| > 2$ is considered an outlier worth inspection. RMSZ is the root-mean-square of all Z scores of the bond lengths (or angles).

Mol	Type	Chain	Res	Link	Bond lengths			Bond angles		
					Counts	RMSZ	$\#\|Z\| > 2$	Counts	RMSZ	$\#\|Z\| > 2$
2	FM8	A	501	-	30,33,33	2.49	7 (23%)	34,47,47	1.49	5 (14%)

In the following table, the Chirals column lists the number of chiral outliers, the number of chiral centers analysed, the number of these observed in the model and the number defined in the Chemical Component Dictionary. Similar counts are reported in the Torsion and Rings columns. '-' means no outliers of that kind were identified.

Mol	Type	Chain	Res	Link	Chirals	Torsions	Rings
2	FM8	A	501	-	-	11/27/27/27	0/3/3/3

All (7) bond length outliers are listed below:

Mol	Chain	Res	Type	Atoms	Z	Observed(Å)	Ideal(Å)
2	A	501	FM8	N3-N2	-8.28	1.23	1.35
2	A	501	FM8	PA1-OP1	6.57	1.60	1.49
2	A	501	FM8	O2-N1	-4.69	1.36	1.40
2	A	501	FM8	PA1-OP2	4.02	1.61	1.54
2	A	501	FM8	PA1-OP3	-3.60	1.49	1.54
2	A	501	FM8	C12-C1	2.75	1.54	1.50
2	A	501	FM8	PA1-C4	2.36	1.85	1.82

All (5) bond angle outliers are listed below:

Mol	Chain	Res	Type	Atoms	Z	Observed(^{o})	Ideal(^{o})
2	A	501	FM8	N4-C20-N2	-4.97	106.23	112.24
2	A	501	FM8	OP2-PA1-OP1	-3.60	104.39	113.45
2	A	501	FM8	C20-N4-C19	3.55	106.34	102.34
2	A	501	FM8	C18-C13-C14	-2.04	116.34	120.98
2	A	501	FM8	C13-C18-N2	-2.00	109.23	112.17

There are no chirality outliers.

All (11) torsion outliers are listed below:

Mol	Chain	Res	Type	Atoms
2	A	501	FM8	N1-C2-C3-C4
2	A	501	FM8	C3-C4-PA1-OP1
2	A	501	FM8	C3-C4-PA1-OP2

Continued on next page...

Continued from previous page...

Mol	Chain	Res	Type	Atoms
2	A	501	FM8	C3-C4-PA1-OP3
2	A	501	FM8	C6-C4-PA1-OP1
2	A	501	FM8	C6-C4-PA1-OP2
2	A	501	FM8	C6-C4-PA1-OP3
2	A	501	FM8	C14-C13-C18-N2
2	A	501	FM8	C12-C13-C18-N2
2	A	501	FM8	C13-C18-N2-C20
2	A	501	FM8	C3-C2-N1-C1

There are no ring outliers.

1 monomer is involved in 1 short contact:

Mol	Chain	Res	Type	Clashes	Symm-Clashes
2	A	501	FM8	1	0

The following is a two-dimensional graphical depiction of Mogul quality analysis of bond lengths, bond angles, torsion angles, and ring geometry for all instances of the Ligand of Interest. In addition, ligands with molecular weight > 250 and outliers as shown on the validation Tables will also be included. For torsion angles, if less then 5% of the Mogul distribution of torsion angles is within 10 degrees of the torsion angle in question, then that torsion angle is considered an outlier. Any bond that is central to one or more torsion angles identified as an outlier by Mogul will be highlighted in the graph. For rings, the root-mean-square deviation (RMSD) between the ring in question and similar rings identified by Mogul is calculated over all ring torsion angles. If the average RMSD is greater than 60 degrees and the minimal RMSD between the ring in question and any Mogul-identified rings is also greater than 60 degrees, then that ring is considered an outlier. The outliers are highlighted in purple. The color gray indicates Mogul did not find sufficient equivalents in the CSD to analyse the geometry.

Ligand FM8 A 501

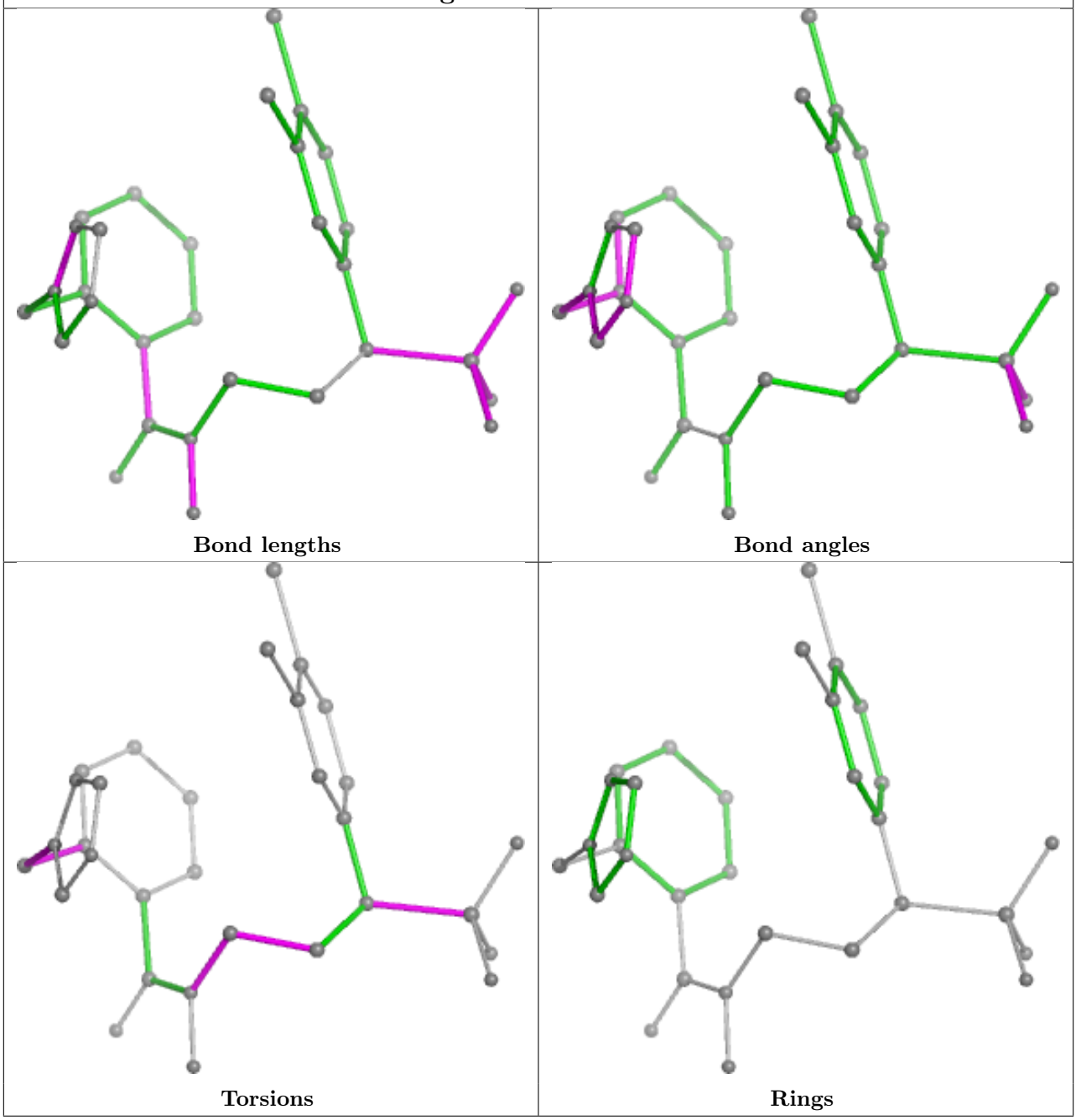

5.7 Other polymers (i)

There are no such residues in this entry.

5.8 Polymer linkage issues (i)

There are no chain breaks in this entry.

6 Fit of model and data (i)

6.1 Protein, DNA and RNA chains (i)

In the following table, the column labelled '#RSRZ> 2' contains the number (and percentage) of RSRZ outliers, followed by percent RSRZ outliers for the chain as percentile scores relative to all X-ray entries and entries of similar resolution. The OWAB column contains the minimum, median, 95th percentile and maximum values of the occupancy-weighted average B-factor per residue. The column labelled 'Q< 0.9' lists the number of (and percentage) of residues with an average occupancy less than 0.9.

Mol	Chain	Analysed	<RSRZ>	#RSRZ>2			OWAB(Å^2)	Q<0.9
1	A	357/397 (89%)	0.80	51 (14%)	2	2	19, 40, 72, 89	0
1	B	373/397 (93%)	0.19	6 (1%)	72	74	16, 25, 45, 70	0
All	All	730/794 (91%)	0.49	57 (7%)	13	14	16, 31, 62, 89	0

All (57) RSRZ outliers are listed below:

Mol	Chain	Res	Type	RSRZ
1	A	85	SER	11.4
1	A	47	GLY	9.0
1	A	51	LEU	7.0
1	A	53	THR	4.6
1	A	88	ALA	4.5
1	A	55	LEU	4.5
1	A	60	GLN	4.5
1	A	59	ALA	4.3
1	A	96	GLU	4.2
1	A	52	ASP	4.2
1	A	80	ILE	4.2
1	A	83	HIS	4.2
1	A	67	ALA	3.9
1	A	56	ARG	3.8
1	A	92	VAL	3.8
1	A	384	ARG	3.8
1	A	64	THR	3.7
1	A	107	ALA	3.7
1	A	50	HIS	3.6
1	A	37	ASP	3.5
1	A	208	MET	3.5
1	A	82	TYR	3.4
1	A	137	LEU	3.3
1	A	46	ALA	3.3

Continued on next page...

Continued from previous page...

Mol	Chain	Res	Type	RSRZ
1	A	115	ALA	3.2
1	A	362	ALA	3.2
1	A	62	GLY	3.0
1	A	142	ALA	3.0
1	A	86	ASP	3.0
1	A	386	VAL	2.9
1	A	353	ASP	2.9
1	A	140	ARG	2.9
1	B	388	GLY	2.8
1	B	186	ALA	2.8
1	A	54	LEU	2.7
1	A	42	VAL	2.7
1	A	291	HIS	2.6
1	A	68	VAL	2.6
1	A	95	THR	2.6
1	A	90	ARG	2.5
1	A	367	THR	2.5
1	A	48	GLY	2.4
1	B	289	ASP	2.3
1	B	341	ARG	2.3
1	B	75	GLN	2.2
1	A	207	PRO	2.2
1	A	63	VAL	2.2
1	A	356	HIS	2.2
1	A	143	ARG	2.1
1	A	361	TRP	2.1
1	A	370	ASP	2.1
1	B	389	MET	2.1
1	A	136	SER	2.1
1	A	61	THR	2.1
1	A	359	ASP	2.0
1	A	116	ALA	2.0
1	A	341	ARG	2.0

6.2 Non-standard residues in protein, DNA, RNA chains (i)

There are no non-standard protein/DNA/RNA residues in this entry.

6.3 Carbohydrates (i)

There are no monosaccharides in this entry.

6.4 Ligands (i)

In the following table, the Atoms column lists the number of modelled atoms in the group and the number defined in the chemical component dictionary. The B-factors column lists the minimum, median, 95th percentile and maximum values of B factors of atoms in the group. The column labelled 'Q< 0.9' lists the number of atoms with occupancy less than 0.9.

Mol	Type	Chain	Res	Atoms	RSCC	RSR	B-factors(Å^2)	Q<0.9
3	MN	B	401	1/1	0.72	0.15	51,51,51,51	0
2	FM8	A	501	31/31	0.87	0.20	30,53,63,63	0

The following is a graphical depiction of the model fit to experimental electron density of all instances of the Ligand of Interest. In addition, ligands with molecular weight > 250 and outliers as shown on the geometry validation Tables will also be included. Each fit is shown from different orientation to approximate a three-dimensional view.

Electron density around FM8 A 501:

$2mF_o$-DF_c (at 0.7 rmsd) in gray
mF_o-DF_c (at 3 rmsd) in purple (negative) and green (positive)

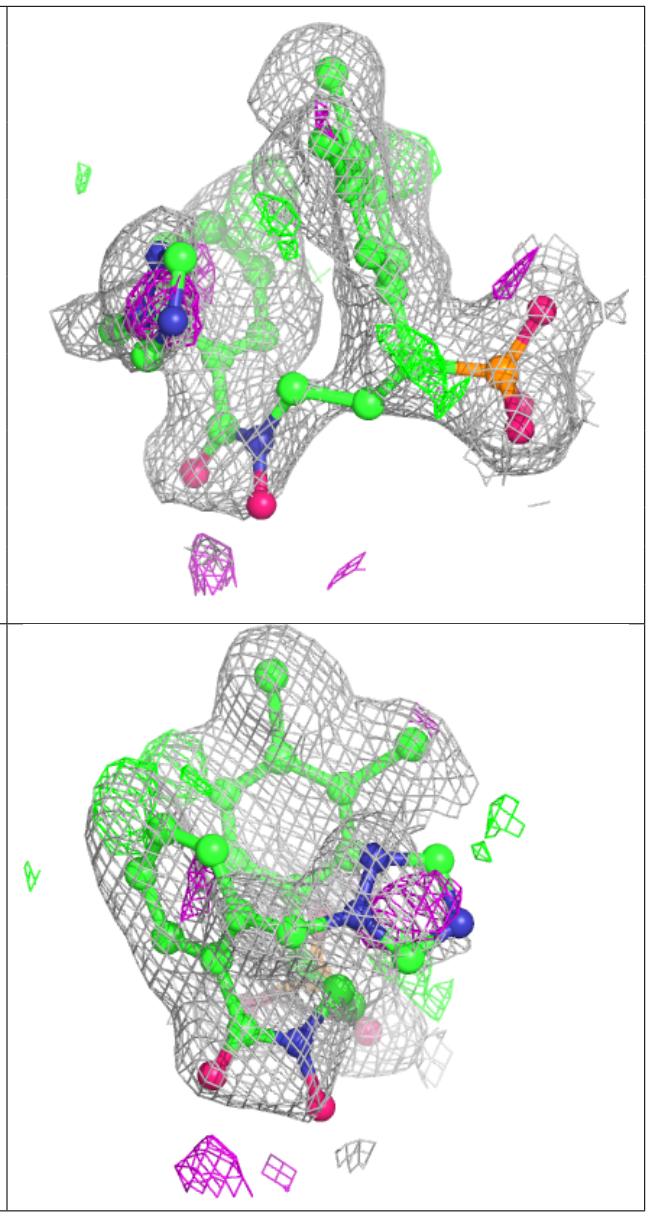

6.5 Other polymers (i)

There are no such residues in this entry.