Full wwPDB X-ray Structure Validation Report (i)

Jun 17, 2024 – 06:44 PM EDT

PDB ID	:	5Y0E
Title	:	Crystal structure of TssK
Authors	:	Tong, H.; Xu, D.; Ran, T.; Wang, W.W.
Deposited on	:	2017-07-17
Resolution	:	2.50 Å(reported)

This is a Full wwPDB X-ray Structure Validation Report for a publicly released PDB entry.

We welcome your comments at *validation@mail.wwpdb.org*
A user guide is available at
https://www.wwpdb.org/validation/2017/XrayValidationReportHelp
with specific help available everywhere you see the (i) symbol.

The types of validation reports are described at
http://www.wwpdb.org/validation/2017/FAQs#types.

The following versions of software and data (see references (i)) were used in the production of this report:

MolProbity	:	4.02b-467
Mogul	:	1.8.5 (274361), CSD as541be (2020)
Xtriage (Phenix)	:	1.13
EDS	:	2.37.1
Percentile statistics	:	20191225.v01 (using entries in the PDB archive December 25th 2019)
Refmac	:	5.8.0158
CCP4	:	7.0.044 (Gargrove)
Ideal geometry (proteins)	:	Engh & Huber (2001)
Ideal geometry (DNA, RNA)	:	Parkinson et al. (1996)
Validation Pipeline (wwPDB-VP)	:	2.37.1

1 Overall quality at a glance (i)

The following experimental techniques were used to determine the structure:
X-RAY DIFFRACTION

The reported resolution of this entry is 2.50 Å.

Percentile scores (ranging between 0-100) for global validation metrics of the entry are shown in the following graphic. The table shows the number of entries on which the scores are based.

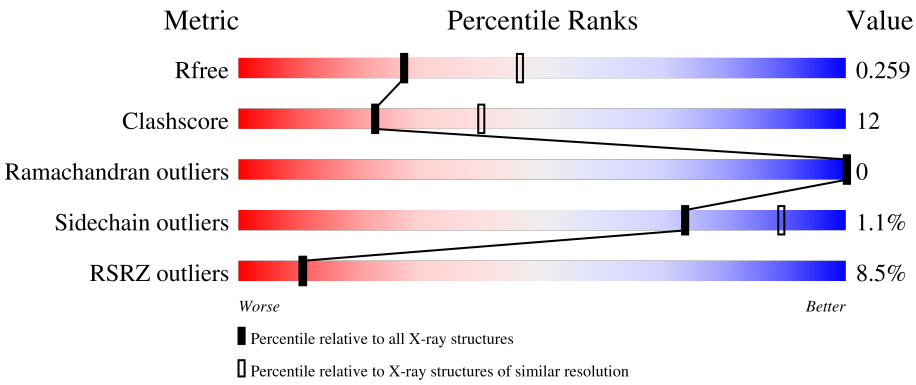

Metric	Whole archive (#Entries)	Similar resolution (#Entries, resolution range(Å))
R_{free}	130704	4661 (2.50-2.50)
Clashscore	141614	5346 (2.50-2.50)
Ramachandran outliers	138981	5231 (2.50-2.50)
Sidechain outliers	138945	5233 (2.50-2.50)
RSRZ outliers	127900	4559 (2.50-2.50)

The table below summarises the geometric issues observed across the polymeric chains and their fit to the electron density. The red, orange, yellow and green segments of the lower bar indicate the fraction of residues that contain outliers for >=3, 2, 1 and 0 types of geometric quality criteria respectively. A grey segment represents the fraction of residues that are not modelled. The numeric value for each fraction is indicated below the corresponding segment, with a dot representing fractions <=5% The upper red bar (where present) indicates the fraction of residues that have poor fit to the electron density. The numeric value is given above the bar.

Mol	Chain	Length	Quality of chain
1	A	456	6%, 81%, 16%, ·
1	B	456	3%, 78%, 19%, ·
1	C	456	16%, 65%, 28%, 7%

2 Entry composition (i)

There are 3 unique types of molecules in this entry. The entry contains 10406 atoms, of which 0 are hydrogens and 0 are deuteriums.

In the tables below, the ZeroOcc column contains the number of atoms modelled with zero occupancy, the AltConf column contains the number of residues with at least one atom in alternate conformation and the Trace column contains the number of residues modelled with at most 2 atoms.

- Molecule 1 is a protein called TssK.

Mol	Chain	Residues	Atoms					ZeroOcc	AltConf	Trace
			Total	C	N	O	S			
1	A	442	3476	2208	617	633	18	0	0	0
1	B	440	3477	2212	616	631	18	0	0	0
1	C	425	3288	2095	578	599	16	0	0	0

- Molecule 2 is SULFATE ION (three-letter code: SO4) (formula: O_4S).

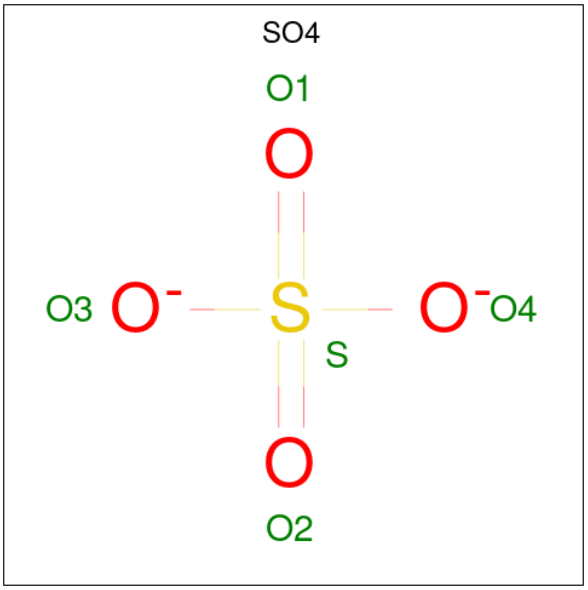

Mol	Chain	Residues	Atoms			ZeroOcc	AltConf
			Total	O	S		
2	A	1	5	4	1	0	0
2	B	1	5	4	1	0	0
2	B	1	5	4	1	0	0

Continued on next page...

Continued from previous page...

Mol	Chain	Residues	Atoms			ZeroOcc	AltConf
			Total	O	S		
2	C	1	5	4	1	0	0
			Total	O	S		
2	C	1	5	4	1	0	0

- Molecule 3 is water.

Mol	Chain	Residues	Atoms		ZeroOcc	AltConf
			Total	O		
3	A	55	55	55	0	0
			Total	O		
3	B	49	49	49	0	0
			Total	O		
3	C	36	36	36	0	0

3 Residue-property plots (i)

These plots are drawn for all protein, RNA, DNA and oligosaccharide chains in the entry. The first graphic for a chain summarises the proportions of the various outlier classes displayed in the second graphic. The second graphic shows the sequence view annotated by issues in geometry and electron density. Residues are color-coded according to the number of geometric quality criteria for which they contain at least one outlier: green = 0, yellow = 1, orange = 2 and red = 3 or more. A red dot above a residue indicates a poor fit to the electron density (RSRZ > 2). Stretches of 2 or more consecutive residues without any outlier are shown as a green connector. Residues present in the sample, but not in the model, are shown in grey.

- Molecule 1: TssK

Chain A:

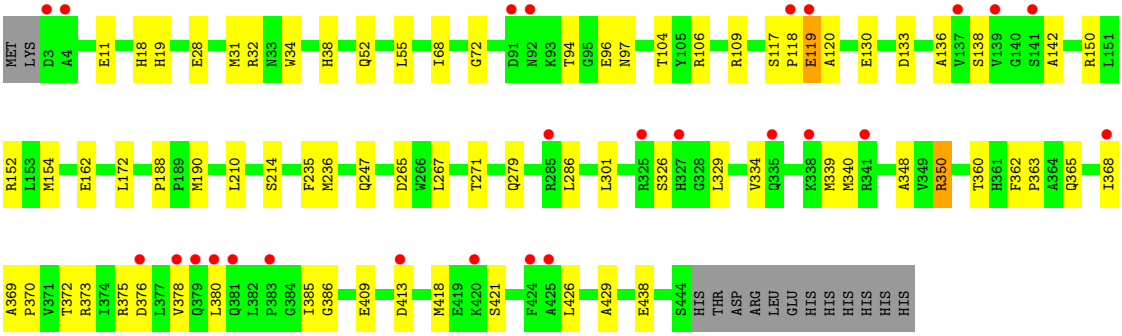

- Molecule 1: TssK

Chain B:

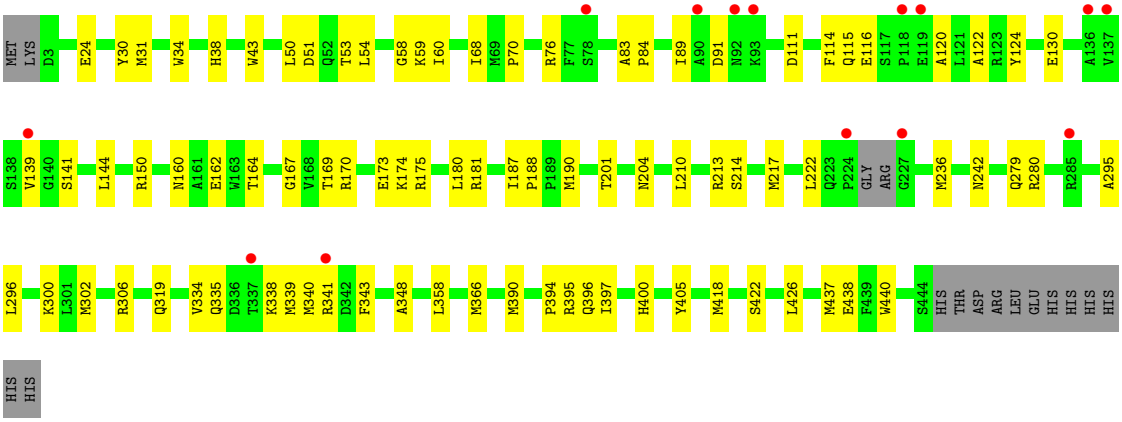

- Molecule 1: TssK

Chain C:

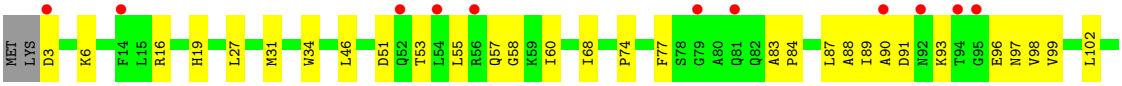

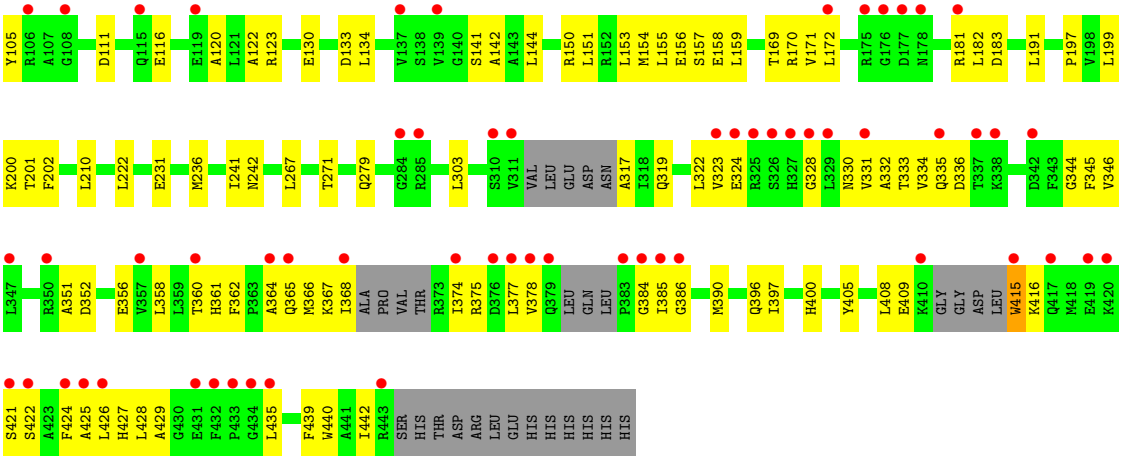
Y105 R106 A107 G108 D111 Q115 E116 E119 A120 L121 A122 R123 E130 D133 L134 V137 S138 V139 G140 S141 A142 A143 L144 R150 L151 R152 L153 M154 L155 E156 S157 E158 L159 T169 R170 V171 L172 R175 G176 D177 N178 R181 L182 D183 L191 P197 V198 L199
K200 T201 F202 L210 L222 E231 M236 I241 N242 L267 T271 Q279 G284 R285 L303 S310 V311 VAL LEU GLU ASP ASN A317 I318 Q319 L322 V323 E324 R325 S326 H327 G328 L329 N330 V331 A332 T333 V334 Q335 D336 T337 K338 D342 F343 G344 F345 V346
L347 R350 A351 D352 E356 V357 L358 L359 T360 H361 F362 P363 A364 Q365 M366 K367 I368 ALA PRO VAL THR R373 I374 R375 D376 L377 V378 Q379 LEU GLN LEU P383 G384 I385 G386 M390 Q396 I397 H400 Y405 L408 E409 K410 GLY GLY ASP LEU W415 K416 Q417 M418 E419 K420
S421 S422 A423 F424 A425 L426 H427 L428 A429 G430 E431 F432 P433 G434 L435 F439 W440 A441 I442 R443 SER HIS THR ASP ARG LEU GLU HIS HIS HIS HIS HIS HIS

4 Data and refinement statistics (i)

Property	Value	Source
Space group	P 65 2 2	Depositor
Cell constants a, b, c, α, β, γ	151.83Å 151.83Å 313.19Å 90.00° 90.00° 120.00°	Depositor
Resolution (Å)	19.97 – 2.50 19.97 – 2.50	Depositor EDS
% Data completeness (in resolution range)	100.0 (19.97-2.50) 100.0 (19.97-2.50)	Depositor EDS
R_{merge}	(Not available)	Depositor
R_{sym}	(Not available)	Depositor
$< I/\sigma(I) >$ [1]	2.43 (at 2.50Å)	Xtriage
Refinement program	PHENIX (DEV_2247: ???)	Depositor
R, R_{free}	0.219 , 0.262 0.225 , 0.259	Depositor DCC
R_{free} test set	3594 reflections (4.84%)	wwPDB-VP
Wilson B-factor (Å^2)	57.7	Xtriage
Anisotropy	0.204	Xtriage
Bulk solvent k_{sol}(e/Å^3), B_{sol}(Å^2)	0.34 , 43.8	EDS
L-test for twinning[2]	$< \|L\| > = 0.48$, $< L^2 > = 0.31$	Xtriage
Estimated twinning fraction	No twinning to report.	Xtriage
F_o,F_c correlation	0.94	EDS
Total number of atoms	10406	wwPDB-VP
Average B, all atoms (Å^2)	63.0	wwPDB-VP

Xtriage's analysis on translational NCS is as follows: *The largest off-origin peak in the Patterson function is 1.97% of the height of the origin peak. No significant pseudotranslation is detected.*

[1]Intensities estimated from amplitudes.

[2]Theoretical values of $< |L| >$, $< L^2 >$ for acentric reflections are 0.5, 0.333 respectively for untwinned datasets, and 0.375, 0.2 for perfectly twinned datasets.

5 Model quality (i)

5.1 Standard geometry (i)

Bond lengths and bond angles in the following residue types are not validated in this section: SO4

The Z score for a bond length (or angle) is the number of standard deviations the observed value is removed from the expected value. A bond length (or angle) with $|Z| > 5$ is considered an outlier worth inspection. RMSZ is the root-mean-square of all Z scores of the bond lengths (or angles).

Mol	Chain	Bond lengths		Bond angles	
		RMSZ	$\#\|Z\|>5$	RMSZ	$\#\|Z\|>5$
1	A	0.74	0/3555	0.65	0/4823
1	B	0.71	0/3555	0.64	0/4820
1	C	0.59	1/3361 (0.0%)	0.66	0/4562
All	All	0.69	1/10471 (0.0%)	0.65	0/14205

All (1) bond length outliers are listed below:

Mol	Chain	Res	Type	Atoms	Z	Observed(Å)	Ideal(Å)
1	C	222	LEU	C-N	-5.15	1.22	1.34

There are no bond angle outliers.

There are no chirality outliers.

There are no planarity outliers.

5.2 Too-close contacts (i)

In the following table, the Non-H and H(model) columns list the number of non-hydrogen atoms and hydrogen atoms in the chain respectively. The H(added) column lists the number of hydrogen atoms added and optimized by MolProbity. The Clashes column lists the number of clashes within the asymmetric unit, whereas Symm-Clashes lists symmetry-related clashes.

Mol	Chain	Non-H	H(model)	H(added)	Clashes	Symm-Clashes
1	A	3476	0	3424	76	0
1	B	3477	0	3447	70	0
1	C	3288	0	3180	119	0
2	A	5	0	0	0	0
2	B	10	0	0	0	0
2	C	10	0	0	0	0
3	A	55	0	0	0	0

Continued on next page...

Continued from previous page...

Mol	Chain	Non-H	H(model)	H(added)	Clashes	Symm-Clashes
3	B	49	0	0	0	0
3	C	36	0	0	2	0
All	All	10406	0	10051	236	0

The all-atom clashscore is defined as the number of clashes found per 1000 atoms (including hydrogen atoms). The all-atom clashscore for this structure is 12.

All (236) close contacts within the same asymmetric unit are listed below, sorted by their clash magnitude.

Atom-1	Atom-2	Interatomic distance (Å)	Clash overlap (Å)
1:A:118:PRO:O	1:A:119:GLU:HG3	1.42	1.16
1:A:118:PRO:C	1:A:119:GLU:HG3	1.57	1.09
1:A:18:HIS:HD2	1:C:142:ALA:HB3	1.14	1.06
1:A:18:HIS:HD2	1:C:142:ALA:CB	1.69	1.05
1:C:328:GLY:O	1:C:427:HIS:HA	1.60	1.00
1:C:346:VAL:HG12	1:C:390:MET:HE2	1.45	0.96
1:C:335:GLN:O	1:C:336:ASP:OD1	1.90	0.90
1:A:94:THR:HG23	1:A:172:LEU:O	1.73	0.89
1:A:375:ARG:O	1:A:378:VAL:HG12	1.71	0.89
1:C:367:LYS:CB	1:C:384:GLY:HA3	2.02	0.89
1:A:18:HIS:CD2	1:C:142:ALA:CB	2.56	0.89
1:A:18:HIS:CD2	1:C:142:ALA:HB3	2.06	0.88
1:B:31:MET:HG2	1:C:31:MET:SD	2.15	0.87
1:A:118:PRO:O	1:A:119:GLU:CG	2.21	0.86
1:C:365:GLN:HB3	1:C:429:ALA:HB3	1.56	0.85
1:B:340:MET:CE	1:B:418:MET:HE3	2.08	0.84
1:C:332:ALA:HB3	1:C:424:PHE:HB2	1.61	0.82
1:A:152:ARG:HD2	1:A:154:MET:CE	2.11	0.81
1:B:340:MET:CE	1:B:418:MET:CE	2.62	0.77
1:C:346:VAL:CG1	1:C:390:MET:HE2	2.14	0.77
1:A:373:ARG:HG3	1:A:373:ARG:O	1.84	0.75
1:C:415:TRP:CD1	1:C:416:LYS:N	2.55	0.74
1:B:340:MET:HE3	1:B:418:MET:HE3	1.69	0.73
1:A:120:ALA:O	1:A:150:ARG:NH2	2.22	0.73
1:A:369:ALA:HB1	1:A:370:PRO:CD	2.19	0.72
1:A:340:MET:CE	1:A:418:MET:CE	2.68	0.71
1:C:322:LEU:HD11	1:C:439:PHE:CB	2.21	0.71
1:C:361:HIS:HB3	1:C:365:GLN:OE1	1.90	0.70
1:C:386:GLY:C	1:C:409:GLU:HG3	2.12	0.70
1:A:340:MET:HE3	1:A:418:MET:CE	2.21	0.70
1:A:31:MET:HG2	1:C:31:MET:HG3	1.72	0.70

Continued on next page...

Continued from previous page...

Atom-1	Atom-2	Interatomic distance (Å)	Clash overlap (Å)
1:A:18:HIS:CD2	1:C:142:ALA:HB2	2.27	0.69
1:B:120:ALA:O	1:B:150:ARG:NH2	2.24	0.69
1:B:338:LYS:HD3	1:B:338:LYS:N	2.06	0.69
1:B:213:ARG:O	1:B:217:MET:HG3	1.94	0.68
1:C:172:LEU:CD1	1:C:183:ASP:HB2	2.23	0.68
1:A:365:GLN:HG2	1:A:429:ALA:HB3	1.75	0.68
1:C:322:LEU:HD11	1:C:439:PHE:HB2	1.75	0.68
1:B:340:MET:HE1	1:B:418:MET:CE	2.24	0.67
1:C:317:ALA:HB2	1:C:396:GLN:HB3	1.75	0.67
1:A:38:HIS:HE1	1:C:68:ILE:HD12	1.60	0.67
1:A:117:SER:OG	1:A:118:PRO:HD2	1.94	0.66
1:C:415:TRP:HD1	1:C:416:LYS:H	1.43	0.66
1:A:133:ASP:HB3	1:A:138:SER:HB3	1.78	0.66
1:C:408:LEU:HD11	1:C:439:PHE:CZ	2.30	0.66
1:A:236:MET:CE	1:C:236:MET:HG3	2.26	0.65
1:C:366:MET:SD	1:C:426:LEU:HD23	2.37	0.65
1:A:152:ARG:HD2	1:A:154:MET:HE3	1.79	0.65
1:B:89:ILE:O	1:B:174:LYS:NZ	2.29	0.64
1:C:116:GLU:OE2	1:C:150:ARG:NH1	2.30	0.64
1:A:106:ARG:NH2	1:A:162:GLU:OE2	2.31	0.63
1:C:97:ASN:ND2	1:C:156:GLU:OE1	2.32	0.63
1:C:111:ASP:HA	1:C:122:ALA:HA	1.81	0.63
1:C:346:VAL:CG1	1:C:390:MET:CE	2.76	0.63
1:A:152:ARG:HD2	1:A:154:MET:HE2	1.80	0.62
1:B:302:MET:O	1:B:306:ARG:HG3	1.99	0.62
1:A:236:MET:HG3	1:B:236:MET:HE3	1.82	0.62
1:C:368:ILE:HD12	1:C:385:ILE:HD11	1.81	0.61
1:C:319:GLN:HB2	1:C:440:TRP:CZ3	2.36	0.61
1:A:279:GLN:N	1:A:279:GLN:OE1	2.32	0.61
1:C:367:LYS:CB	1:C:384:GLY:CA	2.77	0.60
1:B:91:ASP:HA	1:B:174:LYS:HE2	1.82	0.60
1:A:375:ARG:O	1:A:378:VAL:CG1	2.48	0.60
1:C:385:ILE:HD12	1:C:408:LEU:HB3	1.83	0.59
1:C:346:VAL:HG21	1:C:397:ILE:HD11	1.84	0.59
1:A:350:ARG:CG	1:A:350:ARG:HH21	2.15	0.59
1:B:58:GLY:HA2	1:B:180:LEU:HG	1.84	0.59
1:B:213:ARG:HE	1:B:217:MET:CE	2.17	0.58
1:C:390:MET:HE3	1:C:405:TYR:HB3	1.85	0.58
1:A:350:ARG:NH2	1:A:350:ARG:HG3	2.18	0.58
1:C:172:LEU:HD13	1:C:183:ASP:HB2	1.86	0.57
1:B:340:MET:CE	1:B:418:MET:HE2	2.35	0.57

Continued on next page...

Continued from previous page...

Atom-1	Atom-2	Interatomic distance (Å)	Clash overlap (Å)
1:C:111:ASP:HB2	1:C:123:ARG:H	1.69	0.57
1:C:172:LEU:HD11	1:C:183:ASP:HB2	1.86	0.57
1:C:345:PHE:HB2	1:C:408:LEU:HD12	1.87	0.56
1:C:130:GLU:OE2	1:C:141:SER:OG	2.22	0.56
1:A:19:HIS:NE2	1:C:144:LEU:HD22	2.20	0.56
1:A:373:ARG:O	1:A:373:ARG:CG	2.47	0.55
1:C:386:GLY:O	1:C:409:GLU:HG3	2.06	0.55
1:B:340:MET:HE1	1:B:418:MET:HE2	1.88	0.55
1:A:368:ILE:O	1:A:385:ILE:HD12	2.07	0.55
1:C:60:ILE:HD12	1:C:98:VAL:HG21	1.88	0.55
1:C:279:GLN:N	1:C:279:GLN:OE1	2.40	0.54
1:A:340:MET:HE3	1:A:418:MET:HE3	1.88	0.54
1:B:54:LEU:CD1	1:B:59:LYS:HB2	2.37	0.54
1:C:99:VAL:HG21	1:C:159:LEU:HD11	1.89	0.54
1:C:322:LEU:HD11	1:C:439:PHE:HB3	1.89	0.54
1:A:376:ASP:O	1:A:380:LEU:HB2	2.08	0.54
1:C:374:ILE:HA	1:C:377:LEU:HD23	1.89	0.54
1:B:60:ILE:HD12	1:B:89:ILE:HD11	1.90	0.53
1:C:155:LEU:HB2	1:C:158:GLU:HG3	1.91	0.53
1:A:34:TRP:CD1	1:C:74:PRO:HG3	2.44	0.52
1:C:408:LEU:HD11	1:C:439:PHE:HZ	1.74	0.52
1:C:87:LEU:HD12	1:C:153:LEU:O	2.09	0.52
1:A:236:MET:HE3	1:C:236:MET:HG3	1.90	0.52
1:A:376:ASP:O	1:A:380:LEU:N	2.34	0.51
1:A:362:PHE:HB3	1:A:363:PRO:HD3	1.92	0.51
1:B:51:ASP:OD2	1:B:54:LEU:HB2	2.10	0.51
1:B:83:ALA:HB1	1:B:84:PRO:HD2	1.91	0.51
1:A:350:ARG:HH21	1:A:350:ARG:HG3	1.73	0.51
1:B:366:MET:HE3	1:B:366:MET:HA	1.93	0.51
1:C:346:VAL:HG12	1:C:390:MET:CE	2.28	0.51
1:A:340:MET:CE	1:A:418:MET:HE1	2.41	0.51
1:C:374:ILE:O	1:C:377:LEU:N	2.44	0.51
1:B:111:ASP:O	1:B:122:ALA:HB1	2.10	0.51
1:C:361:HIS:O	1:C:364:ALA:N	2.33	0.51
1:B:31:MET:CG	1:C:31:MET:SD	2.96	0.50
1:B:213:ARG:HE	1:B:217:MET:HE3	1.76	0.50
1:B:173:GLU:OE2	1:B:175:ARG:HG2	2.11	0.50
1:C:344:GLY:N	1:C:442:ILE:O	2.43	0.50
1:B:139:VAL:HG23	1:B:139:VAL:O	2.11	0.50
1:B:188:PRO:O	1:B:190:MET:HG2	2.12	0.50
1:A:130:GLU:HG3	1:A:142:ALA:C	2.31	0.50

Continued on next page...

Continued from previous page...

Atom-1	Atom-2	Interatomic distance (Å)	Clash overlap (Å)
1:A:369:ALA:HB1	1:A:370:PRO:HD2	1.94	0.50
1:A:152:ARG:CD	1:A:154:MET:HE2	2.41	0.49
1:C:375:ARG:HA	1:C:378:VAL:HG13	1.94	0.49
1:B:160:ASN:OD1	1:B:162:GLU:HG2	2.12	0.49
1:C:84:PRO:HB3	1:C:151:LEU:O	2.12	0.49
1:A:11:GLU:OE2	1:C:16:ARG:NH1	2.45	0.49
1:C:324:GLU:HA	1:C:330:ASN:OD1	2.12	0.49
1:A:267:LEU:HA	1:A:301:LEU:HD11	1.93	0.49
1:C:366:MET:SD	1:C:426:LEU:CD2	3.01	0.49
1:B:116:GLU:OE1	1:B:150:ARG:NH1	2.46	0.49
1:A:360:THR:O	1:A:363:PRO:HD2	2.12	0.49
1:A:188:PRO:O	1:A:190:MET:HG2	2.13	0.49
1:A:286:LEU:HD23	1:A:286:LEU:HA	1.61	0.49
1:C:408:LEU:HD11	1:C:439:PHE:CE1	2.48	0.49
1:B:296:LEU:O	1:B:300:LYS:HG3	2.12	0.48
1:A:326:SER:HB2	1:A:329:LEU:HB3	1.96	0.48
1:A:19:HIS:CD2	1:C:144:LEU:HD22	2.49	0.48
1:C:356:GLU:O	1:C:360:THR:HG23	2.12	0.48
1:A:68:ILE:HD13	1:B:38:HIS:HE1	1.78	0.48
1:A:340:MET:HE1	1:A:418:MET:HE1	1.94	0.48
1:C:421:SER:OG	1:C:422:SER:N	2.44	0.48
1:A:118:PRO:C	1:A:119:GLU:CG	2.46	0.48
1:B:396:GLN:OE1	1:B:396:GLN:N	2.35	0.48
1:C:358:LEU:O	1:C:362:PHE:HB3	2.14	0.48
1:B:124:TYR:CZ	1:C:6:LYS:HD2	2.50	0.47
1:B:279:GLN:O	1:B:280:ARG:HB2	2.15	0.47
1:C:356:GLU:OE2	1:C:356:GLU:N	2.38	0.47
1:B:144:LEU:HD22	1:C:19:HIS:NE2	2.30	0.47
1:B:319:GLN:HB2	1:B:440:TRP:CZ3	2.50	0.47
1:C:90:ALA:HB3	1:C:93:LYS:HG2	1.97	0.47
1:C:267:LEU:O	1:C:271:THR:HG23	2.15	0.47
1:B:144:LEU:HD22	1:C:19:HIS:CD2	2.50	0.47
1:C:58:GLY:O	1:C:89:ILE:HD12	2.15	0.47
1:C:97:ASN:HA	1:C:170:ARG:HB2	1.98	0.46
1:B:187:ILE:HG13	1:B:295:ALA:HB2	1.98	0.46
1:C:367:LYS:CB	1:C:384:GLY:N	2.79	0.46
1:C:323:VAL:HB	1:C:331:VAL:CG1	2.45	0.46
1:B:397:ILE:HD11	1:B:405:TYR:CE2	2.50	0.46
1:A:348:ALA:HB3	1:A:438:GLU:HB2	1.97	0.45
1:B:335:GLN:HB2	1:B:339:MET:HE3	1.97	0.45
1:B:24:GLU:OE2	1:C:6:LYS:NZ	2.49	0.45

Continued on next page...

Continued from previous page...

Atom-1	Atom-2	Interatomic distance (Å)	Clash overlap (Å)
1:B:173:GLU:HB3	1:B:181:ARG:HB3	1.98	0.45
1:B:338:LYS:N	1:B:338:LYS:CD	2.73	0.45
1:A:52:GLN:O	1:A:55:LEU:HB2	2.16	0.45
1:C:319:GLN:HB2	1:C:440:TRP:CH2	2.51	0.45
1:B:130:GLU:OE1	1:B:141:SER:OG	2.24	0.45
1:B:222:LEU:HA	1:B:222:LEU:HD23	1.58	0.45
1:B:400:HIS:HD2	1:B:438:GLU:OE1	2.00	0.45
1:C:303:LEU:HD13	3:C:606:HOH:O	2.17	0.45
1:B:339:MET:HG3	1:B:343:PHE:CD1	2.52	0.45
1:C:334:VAL:HG22	1:C:422:SER:O	2.17	0.45
1:B:76:ARG:NH1	1:C:3:ASP:OD2	2.50	0.45
1:B:167:GLY:O	1:B:188:PRO:HB3	2.17	0.45
1:C:55:LEU:HD21	1:C:182:LEU:HD11	1.99	0.45
1:A:104:THR:O	1:A:109:ARG:NH1	2.50	0.44
1:C:120:ALA:O	1:C:150:ARG:NH2	2.50	0.44
1:A:18:HIS:ND1	1:A:18:HIS:N	2.66	0.44
1:B:169:THR:OG1	1:B:170:ARG:N	2.50	0.44
1:A:372:THR:OG1	1:A:373:ARG:N	2.51	0.44
1:B:338:LYS:HD2	1:B:341:ARG:NH1	2.32	0.44
1:C:133:ASP:OD1	1:C:134:LEU:N	2.50	0.44
1:C:331:VAL:HG22	1:C:333:THR:N	2.33	0.44
1:B:83:ALA:HB1	1:B:84:PRO:CD	2.48	0.44
1:C:77:PHE:C	1:C:77:PHE:CD1	2.90	0.44
1:A:247:GLN:OE1	1:A:265:ASP:HB3	2.18	0.44
1:C:351:ALA:HB2	1:C:435:LEU:HD23	1.99	0.44
1:C:57:GLN:OE1	1:C:57:GLN:N	2.51	0.43
1:A:386:GLY:C	1:A:409:GLU:HG3	2.38	0.43
1:A:38:HIS:CE1	1:C:68:ILE:HD12	2.47	0.43
1:C:87:LEU:HD23	1:C:88:ALA:O	2.18	0.43
1:C:102:LEU:HD13	1:C:151:LEU:HD23	2.01	0.43
1:A:418:MET:O	1:A:421:SER:N	2.40	0.43
1:C:51:ASP:CG	1:C:53:THR:HG1	2.22	0.43
1:C:96:GLU:OE2	1:C:157:SER:OG	2.33	0.43
1:C:169:THR:OG1	1:C:170:ARG:N	2.51	0.43
1:C:366:MET:HE2	1:C:428:LEU:CB	2.48	0.43
1:A:32:ARG:HD3	1:A:72:GLY:HA3	2.00	0.43
1:A:369:ALA:HB1	1:A:370:PRO:HD3	1.99	0.43
1:A:136:ALA:C	1:A:138:SER:H	2.22	0.43
1:A:368:ILE:HG12	1:A:426:LEU:HG	2.01	0.43
1:B:53:THR:HG23	1:B:54:LEU:H	1.84	0.43
1:B:334:VAL:HG22	1:B:339:MET:SD	2.58	0.43

Continued on next page...

Continued from previous page...

Atom-1	Atom-2	Interatomic distance (Å)	Clash overlap (Å)
1:A:96:GLU:HG3	1:A:97:ASN:N	2.34	0.43
1:C:171:VAL:HG22	1:C:182:LEU:HD23	2.00	0.43
1:C:361:HIS:O	1:C:362:PHE:C	2.57	0.42
1:B:390:MET:CE	1:B:394:PRO:HG3	2.49	0.42
1:A:271:THR:O	1:C:242:ASN:HB3	2.20	0.42
1:B:242:ASN:HB3	1:C:271:THR:O	2.19	0.42
1:C:87:LEU:HD12	1:C:154:MET:HA	2.01	0.42
1:C:111:ASP:HB2	1:C:123:ARG:HB2	2.00	0.42
1:A:380:LEU:HD13	1:A:380:LEU:HA	1.89	0.42
1:B:201:THR:HA	1:B:204:ASN:HB3	2.01	0.42
1:B:31:MET:HE3	1:C:31:MET:HB3	2.01	0.42
1:C:366:MET:HE1	1:C:427:HIS:N	2.34	0.42
1:A:28:GLU:HG2	1:B:30:TYR:CE2	2.54	0.42
1:B:124:TYR:CE2	1:C:6:LYS:HD2	2.54	0.42
1:C:360:THR:OG1	1:C:361:HIS:N	2.52	0.42
1:A:329:LEU:HD12	1:A:426:LEU:O	2.20	0.42
1:C:374:ILE:CD1	1:C:425:ALA:HB3	2.49	0.42
1:A:55:LEU:HD23	1:A:55:LEU:HA	1.84	0.42
1:C:83:ALA:HA	1:C:84:PRO:HD3	1.96	0.42
1:C:415:TRP:CD1	1:C:415:TRP:N	2.87	0.42
1:A:334:VAL:O	1:A:334:VAL:HG23	2.19	0.41
1:B:43:TRP:HA	1:B:68:ILE:HB	2.02	0.41
1:C:46:LEU:HD23	1:C:191:LEU:HB2	2.01	0.41
1:A:210:LEU:O	1:A:214:SER:HB2	2.20	0.41
1:A:235:PHE:HD2	1:B:236:MET:HE1	1.85	0.41
1:C:199:LEU:O	1:C:202:PHE:HB2	2.20	0.41
1:C:200:LYS:HE2	1:C:200:LYS:HB3	1.80	0.41
1:B:210:LEU:O	1:B:214:SER:HB3	2.21	0.41
1:B:334:VAL:HG12	1:B:422:SER:O	2.20	0.41
1:C:210:LEU:HD22	1:C:241:ILE:HG23	2.03	0.41
1:C:375:ARG:O	1:C:378:VAL:HG22	2.20	0.41
1:B:395:ARG:H	1:B:395:ARG:HG3	1.55	0.41
1:C:105:TYR:HB2	1:C:123:ARG:HD2	2.03	0.41
1:C:231:GLU:OE2	3:C:602:HOH:O	2.22	0.41
1:B:348:ALA:O	1:B:437:MET:HA	2.22	0.40
1:B:114:PHE:O	1:B:115:GLN:NE2	2.53	0.40
1:B:358:LEU:HA	1:B:358:LEU:HD12	1.84	0.40
1:B:426:LEU:HD12	1:B:426:LEU:N	2.36	0.40
1:C:197:PRO:O	1:C:201:THR:HG23	2.21	0.40
1:B:70:PRO:HB2	1:B:164:THR:HB	2.04	0.40
1:C:27:LEU:HD23	1:C:27:LEU:HA	1.91	0.40

There are no symmetry-related clashes.

5.3 Torsion angles (i)

5.3.1 Protein backbone (i)

In the following table, the Percentiles column shows the percent Ramachandran outliers of the chain as a percentile score with respect to all X-ray entries followed by that with respect to entries of similar resolution.

The Analysed column shows the number of residues for which the backbone conformation was analysed, and the total number of residues.

Mol	Chain	Analysed	Favoured	Allowed	Outliers	Percentiles	
1	A	440/456 (96%)	425 (97%)	15 (3%)	0	100	100
1	B	436/456 (96%)	418 (96%)	18 (4%)	0	100	100
1	C	415/456 (91%)	394 (95%)	21 (5%)	0	100	100
All	All	1291/1368 (94%)	1237 (96%)	54 (4%)	0	100	100

There are no Ramachandran outliers to report.

5.3.2 Protein sidechains (i)

In the following table, the Percentiles column shows the percent sidechain outliers of the chain as a percentile score with respect to all X-ray entries followed by that with respect to entries of similar resolution.

The Analysed column shows the number of residues for which the sidechain conformation was analysed, and the total number of residues.

Mol	Chain	Analysed	Rotameric	Outliers	Percentiles	
1	A	363/381 (95%)	359 (99%)	4 (1%)	73	89
1	B	366/381 (96%)	364 (100%)	2 (0%)	88	96
1	C	334/381 (88%)	328 (98%)	6 (2%)	59	81
All	All	1063/1143 (93%)	1051 (99%)	12 (1%)	73	89

All (12) residues with a non-rotameric sidechain are listed below:

Mol	Chain	Res	Type
1	A	119	GLU
1	A	339	MET

Continued on next page...

Continued from previous page...

Mol	Chain	Res	Type
1	A	350	ARG
1	A	413	ASP
1	B	34	TRP
1	B	50	LEU
1	C	34	TRP
1	C	91	ASP
1	C	181	ARG
1	C	352	ASP
1	C	400	HIS
1	C	415	TRP

Sometimes sidechains can be flipped to improve hydrogen bonding and reduce clashes. All (3) such sidechains are listed below:

Mol	Chain	Res	Type
1	A	18	HIS
1	C	82	GLN
1	C	239	GLN

5.3.3 RNA (i)

There are no RNA molecules in this entry.

5.4 Non-standard residues in protein, DNA, RNA chains (i)

There are no non-standard protein/DNA/RNA residues in this entry.

5.5 Carbohydrates (i)

There are no monosaccharides in this entry.

5.6 Ligand geometry (i)

5 ligands are modelled in this entry.

In the following table, the Counts columns list the number of bonds (or angles) for which Mogul statistics could be retrieved, the number of bonds (or angles) that are observed in the model and the number of bonds (or angles) that are defined in the Chemical Component Dictionary. The Link column lists molecule types, if any, to which the group is linked. The Z score for a bond length (or angle) is the number of standard deviations the observed value is removed from the

expected value. A bond length (or angle) with $|Z| > 2$ is considered an outlier worth inspection. RMSZ is the root-mean-square of all Z scores of the bond lengths (or angles).

Mol	Type	Chain	Res	Link	Bond lengths			Bond angles		
					Counts	RMSZ	$\#\|Z\| > 2$	Counts	RMSZ	$\#\|Z\| > 2$
2	SO4	C	502	-	4,4,4	0.31	0	6,6,6	0.81	0
2	SO4	A	501	-	4,4,4	0.33	0	6,6,6	0.94	0
2	SO4	B	502	-	4,4,4	0.31	0	6,6,6	0.91	0
2	SO4	B	501	-	4,4,4	0.14	0	6,6,6	0.59	0
2	SO4	C	501	-	4,4,4	0.54	0	6,6,6	0.64	0

There are no bond length outliers.

There are no bond angle outliers.

There are no chirality outliers.

There are no torsion outliers.

There are no ring outliers.

No monomer is involved in short contacts.

5.7 Other polymers (i)

There are no such residues in this entry.

5.8 Polymer linkage issues (i)

There are no chain breaks in this entry.

6 Fit of model and data (i)

6.1 Protein, DNA and RNA chains (i)

In the following table, the column labelled '#RSRZ> 2' contains the number (and percentage) of RSRZ outliers, followed by percent RSRZ outliers for the chain as percentile scores relative to all X-ray entries and entries of similar resolution. The OWAB column contains the minimum, median, 95th percentile and maximum values of the occupancy-weighted average B-factor per residue. The column labelled 'Q< 0.9' lists the number of (and percentage) of residues with an average occupancy less than 0.9.

Mol	Chain	Analysed	<RSRZ>	#RSRZ>2			OWAB(Å^2)	Q<0.9
1	A	442/456 (96%)	0.10	26 (5%)	22	23	31, 55, 105, 134	0
1	B	440/456 (96%)	0.06	14 (3%)	47	51	32, 50, 83, 118	0
1	C	425/456 (93%)	0.80	71 (16%)	1	1	35, 71, 138, 157	0
All	All	1307/1368 (95%)	0.31	111 (8%)	10	10	31, 55, 126, 157	0

All (111) RSRZ outliers are listed below:

Mol	Chain	Res	Type	RSRZ
1	C	377	LEU	8.7
1	C	420	LYS	8.3
1	C	421	SER	8.2
1	C	384	GLY	7.4
1	C	108	GLY	5.4
1	C	176	GLY	5.4
1	C	374	ILE	5.4
1	C	323	VAL	5.4
1	C	378	VAL	5.2
1	C	379	GLN	5.0
1	C	435	LEU	5.0
1	C	410	LYS	4.9
1	C	327	HIS	4.8
1	C	95	GLY	4.8
1	C	415	TRP	4.8
1	B	227	GLY	4.8
1	C	342	ASP	4.7
1	A	92	ASN	4.6
1	C	383	PRO	4.6
1	A	139	VAL	4.5
1	C	434	GLY	4.4
1	C	443	ARG	4.3
1	A	380	LEU	4.3

Continued on next page...

Continued from previous page...

Mol	Chain	Res	Type	RSRZ
1	C	328	GLY	4.2
1	C	431	GLU	4.2
1	C	56	ARG	3.9
1	C	325	ARG	3.8
1	C	425	ALA	3.7
1	A	325	ARG	3.6
1	C	310	SER	3.6
1	C	385	ILE	3.6
1	C	417	GLN	3.6
1	C	92	ASN	3.5
1	A	341	ARG	3.5
1	B	90	ALA	3.4
1	A	378	VAL	3.4
1	C	106	ARG	3.4
1	A	379	GLN	3.4
1	C	426	LEU	3.4
1	C	433	PRO	3.3
1	C	335	GLN	3.3
1	C	172	LEU	3.3
1	C	364	ALA	3.2
1	A	137	VAL	3.2
1	C	422	SER	3.2
1	B	137	VAL	3.2
1	A	424	PHE	3.2
1	C	365	GLN	3.2
1	C	324	GLU	3.1
1	C	360	THR	3.1
1	A	368	ILE	3.0
1	B	337	THR	3.0
1	C	432	PHE	3.0
1	B	136	ALA	3.0
1	C	357	VAL	3.0
1	C	115	GLN	3.0
1	C	326	SER	2.9
1	B	285	ARG	2.9
1	C	137	VAL	2.9
1	C	311	VAL	2.9
1	C	175	ARG	2.8
1	B	92	ASN	2.8
1	C	178	ASN	2.8
1	B	118	PRO	2.8
1	C	376	ASP	2.8

Continued on next page...

Continued from previous page...

Mol	Chain	Res	Type	RSRZ
1	A	285	ARG	2.8
1	C	3	ASP	2.8
1	A	381	GLN	2.7
1	A	118	PRO	2.7
1	C	285	ARG	2.7
1	C	181	ARG	2.7
1	A	413	ASP	2.7
1	C	79	GLY	2.6
1	A	327	HIS	2.6
1	C	386	GLY	2.6
1	C	419	GLU	2.6
1	C	337	THR	2.5
1	C	54	LEU	2.5
1	C	90	ALA	2.5
1	A	376	ASP	2.5
1	C	177	ASP	2.5
1	B	119	GLU	2.5
1	C	338	LYS	2.4
1	A	4	ALA	2.4
1	A	425	ALA	2.4
1	C	94	THR	2.4
1	C	119	GLU	2.4
1	C	350	ARG	2.4
1	B	78	SER	2.4
1	A	119	GLU	2.4
1	B	93	LYS	2.4
1	C	368	ILE	2.4
1	C	81	GLN	2.4
1	A	420	LYS	2.3
1	C	284	GLY	2.3
1	B	139	VAL	2.3
1	A	383	PRO	2.3
1	A	141	SER	2.3
1	C	139	VAL	2.3
1	C	14	PHE	2.3
1	C	329	LEU	2.3
1	C	347	LEU	2.2
1	A	335	GLN	2.2
1	B	341	ARG	2.2
1	C	331	VAL	2.2
1	B	224	PRO	2.1
1	A	3	ASP	2.1

Continued on next page...

Continued from previous page...

Mol	Chain	Res	Type	RSRZ
1	A	91	ASP	2.1
1	C	424	PHE	2.0
1	A	338	LYS	2.0
1	C	52	GLN	2.0

6.2 Non-standard residues in protein, DNA, RNA chains (i)

There are no non-standard protein/DNA/RNA residues in this entry.

6.3 Carbohydrates (i)

There are no monosaccharides in this entry.

6.4 Ligands (i)

In the following table, the Atoms column lists the number of modelled atoms in the group and the number defined in the chemical component dictionary. The B-factors column lists the minimum, median, 95th percentile and maximum values of B factors of atoms in the group. The column labelled 'Q< 0.9' lists the number of atoms with occupancy less than 0.9.

Mol	Type	Chain	Res	Atoms	RSCC	RSR	B-factors(Å^2)	Q<0.9
2	SO4	B	501	5/5	0.83	0.22	81,82,89,116	0
2	SO4	A	501	5/5	0.88	0.35	30,30,30,30	0
2	SO4	C	502	5/5	0.88	0.39	30,30,30,30	0
2	SO4	B	502	5/5	0.91	0.47	30,30,30,30	0
2	SO4	C	501	5/5	0.99	0.09	44,45,49,54	0

6.5 Other polymers (i)

There are no such residues in this entry.