Full wwPDB X-ray Structure Validation Report (i)

Aug 22, 2023 – 04:05 PM EDT

PDB ID	:	2QUT
Title	:	Dihydroxyacetone phosphate enamine intermediate in fructose-1,6-bisphosphate aldolase from rabbit muscle
Authors	:	St-Jean, M.; Sygusch, J.
Deposited on	:	2007-08-06
Resolution	:	1.88 Å(reported)

This is a Full wwPDB X-ray Structure Validation Report for a publicly released PDB entry.

We welcome your comments at *validation@mail.wwpdb.org*
A user guide is available at
https://www.wwpdb.org/validation/2017/XrayValidationReportHelp
with specific help available everywhere you see the (i) symbol.

The types of validation reports are described at
http://www.wwpdb.org/validation/2017/FAQs#types.

The following versions of software and data (see references (i)) were used in the production of this report:

MolProbity	:	4.02b-467
Mogul	:	1.8.5 (274361), CSD as541be (2020)
Xtriage (Phenix)	:	1.13
EDS	:	2.35
Percentile statistics	:	20191225.v01 (using entries in the PDB archive December 25th 2019)
Refmac	:	5.8.0158
CCP4	:	7.0.044 (Gargrove)
Ideal geometry (proteins)	:	Engh & Huber (2001)
Ideal geometry (DNA, RNA)	:	Parkinson et al. (1996)
Validation Pipeline (wwPDB-VP)	:	2.35

1 Overall quality at a glance (i)

The following experimental techniques were used to determine the structure:
X-RAY DIFFRACTION

The reported resolution of this entry is 1.88 Å.

Percentile scores (ranging between 0-100) for global validation metrics of the entry are shown in the following graphic. The table shows the number of entries on which the scores are based.

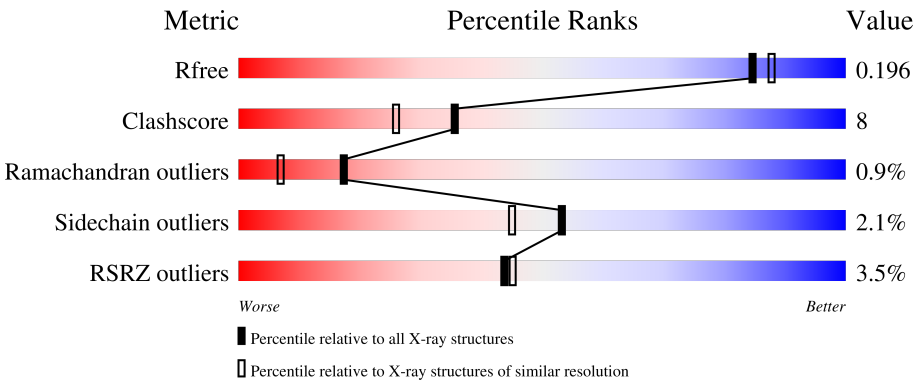

Metric	Whole archive (#Entries)	Similar resolution (#Entries, resolution range(Å))
R_{free}	130704	9470 (1.90-1.86)
Clashscore	141614	10282 (1.90-1.86)
Ramachandran outliers	138981	10152 (1.90-1.86)
Sidechain outliers	138945	10152 (1.90-1.86)
RSRZ outliers	127900	9303 (1.90-1.86)

The table below summarises the geometric issues observed across the polymeric chains and their fit to the electron density. The red, orange, yellow and green segments of the lower bar indicate the fraction of residues that contain outliers for >=3, 2, 1 and 0 types of geometric quality criteria respectively. A grey segment represents the fraction of residues that are not modelled. The numeric value for each fraction is indicated below the corresponding segment, with a dot representing fractions <=5% The upper red bar (where present) indicates the fraction of residues that have poor fit to the electron density. The numeric value is given above the bar.

Mol	Chain	Length	Quality of chain
1	A	363	2%, 77%, 18%
1	B	363	2%, 79%, 17%
1	C	363	2%, 79%, 18%
1	D	363	7%, 78%, 21%

2 Entry composition (i)

There are 3 unique types of molecules in this entry. The entry contains 13663 atoms, of which 0 are hydrogens and 0 are deuteriums.

In the tables below, the ZeroOcc column contains the number of atoms modelled with zero occupancy, the AltConf column contains the number of residues with at least one atom in alternate conformation and the Trace column contains the number of residues modelled with at most 2 atoms.

- Molecule 1 is a protein called Fructose-bisphosphate aldolase A.

Mol	Chain	Residues	Atoms					ZeroOcc	AltConf	Trace
			Total	C	N	O	S			
1	A	350	2673	1680	475	507	11	0	0	0
1	B	350	2673	1680	475	507	11	0	0	0
1	C	353	2691	1690	479	511	11	0	0	0
1	D	360	2730	1715	484	520	11	0	0	0

- Molecule 2 is 1,3-DIHYDROXYACETONEPHOSPHATE (three-letter code: 13P) (formula: $C_3H_7O_6P$).

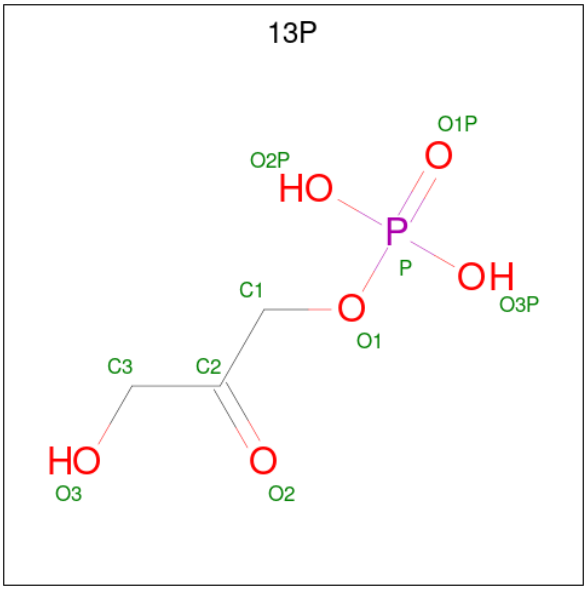

Mol	Chain	Residues	Atoms				ZeroOcc	AltConf
			Total	C	O	P		
2	A	1	9	3	5	1	0	0
2	B	1	9	3	5	1	0	0

Continued on next page...

Continued from previous page...

Mol	Chain	Residues	Atoms				ZeroOcc	AltConf
			Total	C	O	P		
2	C	1	9	3	5	1	0	0
			Total	C	O	P		
2	D	1	9	3	5	1	0	0

- Molecule 3 is water.

Mol	Chain	Residues	Atoms		ZeroOcc	AltConf
			Total	O		
3	A	769	769	769	0	0
			Total	O		
3	B	691	691	691	0	0
			Total	O		
3	C	715	715	715	0	0
			Total	O		
3	D	685	685	685	0	0

3 Residue-property plots (i)

These plots are drawn for all protein, RNA, DNA and oligosaccharide chains in the entry. The first graphic for a chain summarises the proportions of the various outlier classes displayed in the second graphic. The second graphic shows the sequence view annotated by issues in geometry and electron density. Residues are color-coded according to the number of geometric quality criteria for which they contain at least one outlier: green = 0, yellow = 1, orange = 2 and red = 3 or more. A red dot above a residue indicates a poor fit to the electron density (RSRZ > 2). Stretches of 2 or more consecutive residues without any outlier are shown as a green connector. Residues present in the sample, but not in the model, are shown in grey.

• Molecule 1: Fructose-bisphosphate aldolase A

Chain A:

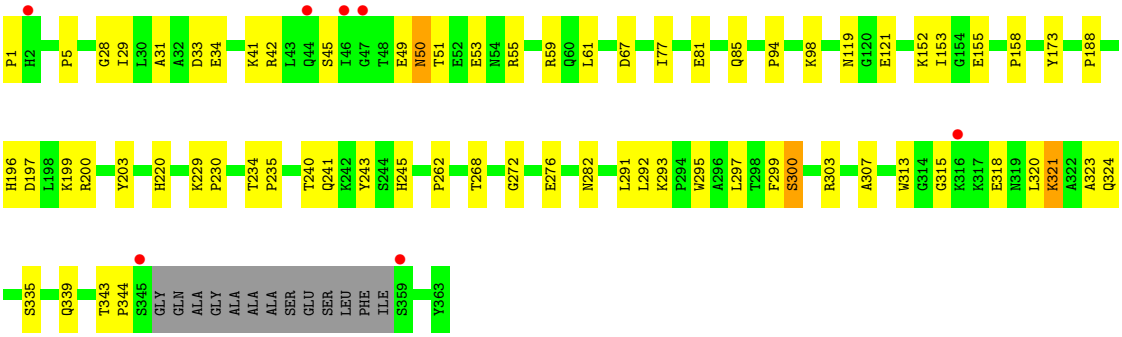

• Molecule 1: Fructose-bisphosphate aldolase A

Chain B:

• Molecule 1: Fructose-bisphosphate aldolase A

Chain C:

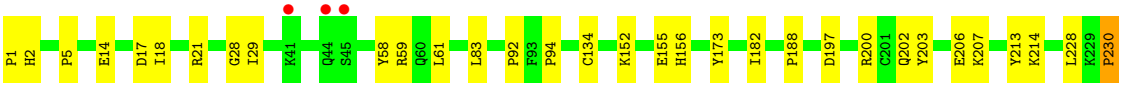

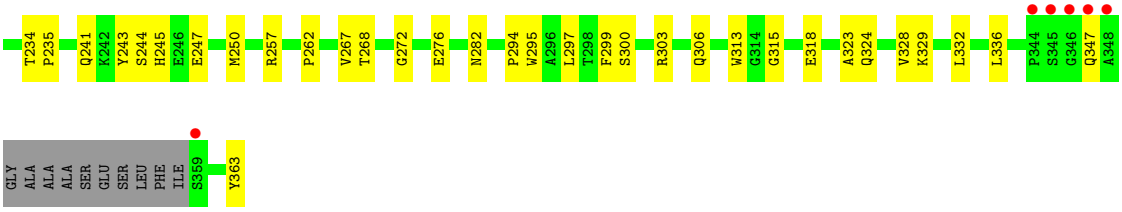

• Molecule 1: Fructose-bisphosphate aldolase A

Chain D:

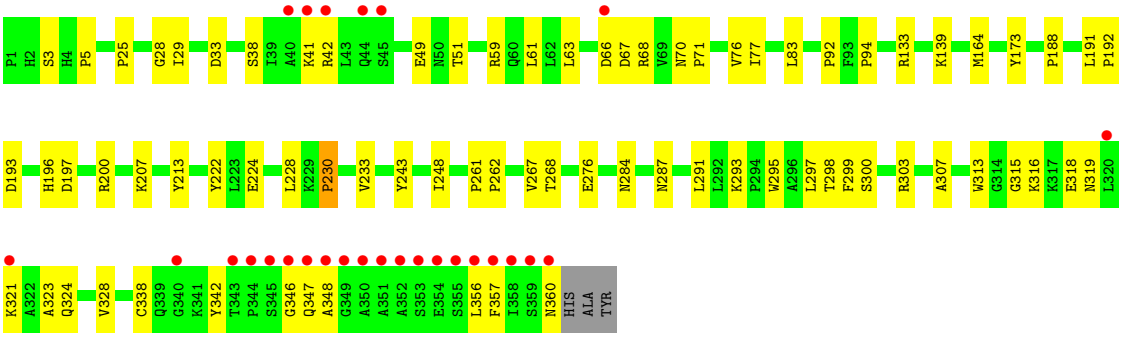

4 Data and refinement statistics (i)

Property	Value	Source
Space group	P 1 21 1	Depositor
Cell constants a, b, c, α, β, γ	82.77Å 102.91Å 84.23Å 90.00° 98.48° 90.00°	Depositor
Resolution (Å)	50.00 – 1.88 48.17 – 1.67	Depositor EDS
% Data completeness (in resolution range)	87.1 (50.00-1.88) 78.9 (48.17-1.67)	Depositor EDS
R_{merge}	(Not available)	Depositor
R_{sym}	0.09	Depositor
$< I/\sigma(I) >$ [1]	0.80 (at 1.67Å)	Xtriage
Refinement program	CNS	Depositor
R, R_{free}	0.159 , 0.191 0.159 , 0.196	Depositor DCC
R_{free} test set	6927 reflections (4.99%)	wwPDB-VP
Wilson B-factor (Å^2)	17.7	Xtriage
Anisotropy	0.558	Xtriage
Bulk solvent k_{sol}(e/Å^3), B_{sol}(Å^2)	0.41 , 84.2	EDS
L-test for twinning[2]	$< \|L\| > = 0.49$, $< L^2 > = 0.32$	Xtriage
Estimated twinning fraction	0.017 for l,-k,h	Xtriage
F_o,F_c correlation	0.96	EDS
Total number of atoms	13663	wwPDB-VP
Average B, all atoms (Å^2)	28.0	wwPDB-VP

Xtriage's analysis on translational NCS is as follows: *The largest off-origin peak in the Patterson function is 5.36% of the height of the origin peak. No significant pseudotranslation is detected.*

[1]Intensities estimated from amplitudes.

[2]Theoretical values of $< |L| >$, $< L^2 >$ for acentric reflections are 0.5, 0.333 respectively for untwinned datasets, and 0.375, 0.2 for perfectly twinned datasets.

5 Model quality (i)

5.1 Standard geometry (i)

Bond lengths and bond angles in the following residue types are not validated in this section: 13P

The Z score for a bond length (or angle) is the number of standard deviations the observed value is removed from the expected value. A bond length (or angle) with $|Z| > 5$ is considered an outlier worth inspection. RMSZ is the root-mean-square of all Z scores of the bond lengths (or angles).

Mol	Chain	Bond lengths		Bond angles	
		RMSZ	$\#\|Z\|>5$	RMSZ	$\#\|Z\|>5$
1	A	0.29	0/2725	0.58	1/3691 (0.0%)
1	B	0.29	0/2725	0.58	0/3691
1	C	0.30	0/2743	0.58	0/3715
1	D	0.29	0/2782	0.57	0/3770
All	All	0.29	0/10975	0.58	1/14867 (0.0%)

Chiral center outliers are detected by calculating the chiral volume of a chiral center and verifying if the center is modelled as a planar moiety or with the opposite hand.A planarity outlier is detected by checking planarity of atoms in a peptide group, atoms in a mainchain group or atoms of a sidechain that are expected to be planar.

Mol	Chain	#Chirality outliers	#Planarity outliers
1	B	0	1
1	C	0	1
1	D	0	1
All	All	0	3

There are no bond length outliers.

All (1) bond angle outliers are listed below:

Mol	Chain	Res	Type	Atoms	Z	Observed(^{o})	Ideal(^{o})
1	A	300	SER	N-CA-C	-5.29	96.72	111.00

There are no chirality outliers.

All (3) planarity outliers are listed below:

Mol	Chain	Res	Type	Group
1	B	213	TYR	Sidechain
1	C	213	TYR	Sidechain

Continued on next page...

Continued from previous page...

Mol	Chain	Res	Type	Group
1	D	213	TYR	Sidechain

5.2 Too-close contacts (i)

In the following table, the Non-H and H(model) columns list the number of non-hydrogen atoms and hydrogen atoms in the chain respectively. The H(added) column lists the number of hydrogen atoms added and optimized by MolProbity. The Clashes column lists the number of clashes within the asymmetric unit, whereas Symm-Clashes lists symmetry-related clashes.

Mol	Chain	Non-H	H(model)	H(added)	Clashes	Symm-Clashes
1	A	2673	0	2693	46	0
1	B	2673	0	2692	44	0
1	C	2691	0	2708	44	0
1	D	2730	0	2753	52	0
2	A	9	0	5	1	0
2	B	9	0	5	0	0
2	C	9	0	5	0	0
2	D	9	0	5	0	0
3	A	769	0	0	9	0
3	B	691	0	0	6	0
3	C	715	0	0	7	0
3	D	685	0	0	10	0
All	All	13663	0	10866	175	0

The all-atom clashscore is defined as the number of clashes found per 1000 atoms (including hydrogen atoms). The all-atom clashscore for this structure is 8.

All (175) close contacts within the same asymmetric unit are listed below, sorted by their clash magnitude.

Atom-1	Atom-2	Interatomic distance (Å)	Clash overlap (Å)
1:B:193:ASP:HA	1:B:237:HIS:HD2	1.42	0.83
1:B:193:ASP:HA	1:B:237:HIS:CD2	2.24	0.72
1:B:291:LEU:O	1:B:293:LYS:HD3	1.90	0.72
1:A:155:GLU:HG2	3:A:3624:HOH:O	1.91	0.71
1:C:336:LEU:HD11	1:C:347:GLN:HA	1.72	0.70
1:A:50:ASN:ND2	1:A:55:ARG:HH11	1.90	0.69
1:C:332:LEU:HD13	1:C:347:GLN:HE22	1.60	0.67
1:C:332:LEU:HD13	1:C:347:GLN:NE2	2.10	0.67
1:D:228:LEU:HG	1:D:230:PRO:HD3	1.78	0.66
1:B:70:ASN:HB2	1:B:71:PRO:HD3	1.77	0.65

Continued on next page...

Continued from previous page...

Atom-1	Atom-2	Interatomic distance (Å)	Clash overlap (Å)
1:A:291:LEU:O	1:A:293:LYS:HD3	1.97	0.65
1:B:293:LYS:HG2	1:B:297:LEU:HD11	1.77	0.65
1:B:152:LYS:HE2	3:B:3238:HOH:O	1.98	0.63
1:D:284:ASN:ND2	1:D:342:TYR:H	1.96	0.63
1:B:197:ASP:HB2	1:B:243:TYR:OH	1.99	0.62
3:A:3128:HOH:O	1:D:200:ARG:HD2	1.99	0.61
1:D:192:PRO:HG2	1:D:357:PHE:HE2	1.65	0.61
1:A:200:ARG:HD2	3:D:3351:HOH:O	2.00	0.61
1:B:18:ILE:HD13	1:B:143:ASP:HB3	1.83	0.61
1:A:49:GLU:HG2	1:A:51:THR:HG23	1.83	0.60
1:D:70:ASN:HB2	1:D:71:PRO:HD3	1.83	0.60
1:A:199:LYS:HG3	3:A:3187:HOH:O	2.01	0.60
1:D:347:GLN:HG2	1:D:348:ALA:H	1.66	0.59
1:B:83:LEU:HD12	1:B:94:PRO:HG3	1.84	0.59
1:D:133:ARG:HD2	3:D:3387:HOH:O	2.03	0.58
1:B:228:LEU:HG	1:B:230:PRO:HD3	1.84	0.58
1:C:324:GLN:O	1:C:328:VAL:HG23	2.03	0.58
1:A:98:LYS:NZ	3:A:3373:HOH:O	2.38	0.56
1:C:336:LEU:CD1	1:C:347:GLN:HA	2.36	0.56
1:D:291:LEU:O	1:D:293:LYS:HE2	2.06	0.56
1:C:134:CYS:HB3	1:C:182:ILE:HD12	1.87	0.56
1:D:276:GLU:CD	1:D:307:ALA:HB3	2.26	0.56
1:A:41:LYS:HB2	3:A:3479:HOH:O	2.05	0.56
1:C:228:LEU:HG	1:C:230:PRO:HD3	1.88	0.55
1:B:28:GLY:HA3	1:B:299:PHE:CZ	2.42	0.55
1:A:293:LYS:HG2	1:A:297:LEU:HD11	1.87	0.55
1:C:313:TRP:CE2	1:C:315:GLY:HA2	2.42	0.55
1:A:61:LEU:HD11	1:A:323:ALA:HB3	1.88	0.55
1:C:83:LEU:HD12	1:C:94:PRO:HG3	1.88	0.54
1:A:245:HIS:HD2	1:A:282:ASN:OD1	1.91	0.54
1:B:343:THR:C	1:B:345:SER:H	2.11	0.54
1:D:28:GLY:HA3	1:D:299:PHE:CZ	2.42	0.54
1:D:316:LYS:HB2	1:D:319:ASN:HD22	1.73	0.53
1:B:92:PRO:HB2	1:B:94:PRO:HD2	1.91	0.53
1:B:212:VAL:HG13	3:B:3383:HOH:O	2.09	0.53
1:D:38:SER:HA	1:D:41:LYS:HE2	1.91	0.53
1:D:191:LEU:HD13	1:D:360:ASN:HD22	1.73	0.53
1:D:324:GLN:O	1:D:328:VAL:HG23	2.08	0.53
1:B:316:LYS:HD3	3:B:3576:HOH:O	2.09	0.52
1:D:316:LYS:HB2	1:D:319:ASN:ND2	2.24	0.52
1:A:220:HIS:HD2	1:D:207:LYS:NZ	2.08	0.52

Continued on next page...

Continued from previous page...

Atom-1	Atom-2	Interatomic distance (Å)	Clash overlap (Å)
1:B:28:GLY:HA3	1:B:299:PHE:CE1	2.44	0.52
1:C:197:ASP:HB2	1:C:243:TYR:OH	2.10	0.51
1:D:28:GLY:HA3	1:D:299:PHE:CE1	2.46	0.51
1:C:268:THR:HB	1:C:300:SER:HB2	1.92	0.51
1:D:268:THR:HB	1:D:300:SER:HB2	1.92	0.51
1:B:3:SER:HB2	1:C:203:TYR:CG	2.46	0.51
1:D:83:LEU:HD12	1:D:94:PRO:HG3	1.93	0.51
1:A:28:GLY:HA3	1:A:299:PHE:CE1	2.46	0.51
1:B:133:ARG:HD2	3:B:3029:HOH:O	2.10	0.51
1:A:29:ILE:HB	1:A:300:SER:HA	1.91	0.51
1:B:194:GLY:H	1:B:237:HIS:CD2	2.29	0.51
1:B:24:ALA:HB3	1:B:27:LYS:HD2	1.93	0.51
1:D:61:LEU:HD11	1:D:323:ALA:CB	2.40	0.50
1:A:268:THR:HB	1:A:300:SER:HB2	1.94	0.50
1:A:121:GLU:OE2	1:A:158:PRO:HA	2.12	0.50
1:B:324:GLN:O	1:B:328:VAL:HG23	2.12	0.50
1:C:245:HIS:HD2	1:C:282:ASN:OD1	1.95	0.50
1:A:81:GLU:O	1:A:85:GLN:HG3	2.12	0.49
1:A:313:TRP:CE2	1:A:315:GLY:HA2	2.48	0.49
1:D:29:ILE:HB	1:D:300:SER:HA	1.94	0.49
1:B:37:GLY:O	1:B:41:LYS:HE2	2.13	0.49
1:C:28:GLY:HA3	1:C:299:PHE:CE1	2.48	0.49
1:B:155:GLU:HG2	1:B:156:HIS:CD2	2.47	0.49
1:D:303:ARG:HB3	1:D:356:LEU:HD13	1.95	0.49
1:D:347:GLN:HG2	1:D:348:ALA:N	2.28	0.49
1:D:347:GLN:O	1:D:348:ALA:HB3	2.13	0.48
1:C:58:TYR:OH	1:C:306:GLN:HB3	2.12	0.48
1:D:61:LEU:HD11	1:D:323:ALA:HB3	1.93	0.48
1:B:257:ARG:HA	1:C:262:PRO:HG2	1.95	0.48
1:C:329:LYS:HB3	3:C:3637:HOH:O	2.12	0.48
1:A:276:GLU:CD	1:A:307:ALA:HB3	2.34	0.48
1:A:28:GLY:HA3	1:A:299:PHE:CZ	2.48	0.48
1:A:241:GLN:HG3	3:A:3628:HOH:O	2.12	0.48
1:D:92:PRO:HB3	3:D:3441:HOH:O	2.13	0.47
1:B:200:ARG:HD2	3:C:3384:HOH:O	2.13	0.47
3:B:3435:HOH:O	1:C:1:PRO:HA	2.13	0.47
1:A:31:ALA:HB1	2:A:3001:13P:H31	1.95	0.47
1:A:41:LYS:NZ	1:A:45:SER:HB3	2.29	0.47
1:B:155:GLU:O	1:C:2:HIS:HE1	1.97	0.47
1:A:321:LYS:NZ	1:A:321:LYS:HB2	2.30	0.47
1:D:33:ASP:HB3	1:D:77:ILE:HG22	1.96	0.47

Continued on next page...

Continued from previous page...

Atom-1	Atom-2	Interatomic distance (Å)	Clash overlap (Å)
1:A:98:LYS:HE2	3:A:3041:HOH:O	2.15	0.47
1:A:94:PRO:O	1:A:98:LYS:HG3	2.15	0.47
1:B:72:CYS:SG	1:B:332:LEU:HD23	2.55	0.47
1:C:272:GLY:HA2	1:C:303:ARG:NH2	2.29	0.47
1:A:50:ASN:HD21	1:A:55:ARG:HH11	1.63	0.47
1:A:272:GLY:HA2	1:A:303:ARG:NH2	2.30	0.47
1:B:220:HIS:HD2	1:C:207:LYS:NZ	2.13	0.47
1:C:250:MET:HG2	1:C:363:TYR:CE2	2.50	0.46
1:C:152:LYS:HD2	3:C:3571:HOH:O	2.16	0.46
1:B:29:ILE:HB	1:B:300:SER:HA	1.97	0.46
1:B:214:LYS:HG2	1:C:214:LYS:HG2	1.98	0.46
1:D:63:LEU:HD21	1:D:76:VAL:HG11	1.96	0.46
1:A:262:PRO:HG3	1:D:262:PRO:HG3	1.98	0.45
1:C:28:GLY:HA3	1:C:299:PHE:CZ	2.52	0.45
1:B:343:THR:C	1:B:345:SER:N	2.70	0.45
1:D:66:ASP:OD1	1:D:68:ARG:HB2	2.16	0.45
1:D:139:LYS:HE3	3:D:3484:HOH:O	2.16	0.45
1:D:61:LEU:C	1:D:61:LEU:HD23	2.37	0.45
1:D:347:GLN:CG	1:D:348:ALA:H	2.28	0.45
1:C:29:ILE:HB	1:C:300:SER:HA	1.98	0.45
1:D:49:GLU:HG3	1:D:51:THR:HG23	1.99	0.45
1:B:343:THR:O	1:B:345:SER:N	2.49	0.45
1:C:244:SER:OG	1:C:247:GLU:HG3	2.17	0.45
1:B:312:ALA:HB3	1:B:323:ALA:HA	1.99	0.44
1:C:234:THR:HB	1:C:235:PRO:HD2	1.98	0.44
1:C:241:GLN:NE2	3:C:3160:HOH:O	2.49	0.44
1:B:3:SER:HB2	1:C:203:TYR:CD1	2.52	0.44
1:D:318:GLU:HB3	3:D:3678:HOH:O	2.17	0.44
1:A:49:GLU:HG2	1:A:51:THR:CG2	2.47	0.44
1:A:61:LEU:HD11	1:A:323:ALA:CB	2.48	0.44
1:B:67:ASP:HA	1:B:70:ASN:OD1	2.17	0.44
1:C:267:VAL:HB	1:C:297:LEU:HD23	2.00	0.44
1:D:298:THR:OG1	1:D:299:PHE:N	2.51	0.44
1:C:155:GLU:HG2	1:C:156:HIS:CD2	2.53	0.44
1:D:356:LEU:HD22	3:D:3641:HOH:O	2.17	0.44
1:B:267:VAL:HB	1:B:297:LEU:HD23	1.99	0.43
1:D:192:PRO:HG2	1:D:357:PHE:CE2	2.48	0.43
1:B:66:ASP:OD1	1:B:68:ARG:HB2	2.17	0.43
1:C:152:LYS:NZ	3:C:3154:HOH:O	2.44	0.43
1:A:34:GLU:HG2	1:A:42:ARG:NH1	2.33	0.43
1:C:58:TYR:HH	1:C:306:GLN:HB3	1.84	0.43

Continued on next page...

Continued from previous page...

Atom-1	Atom-2	Interatomic distance (Å)	Clash overlap (Å)
1:D:267:VAL:HB	1:D:297:LEU:HD23	2.00	0.43
1:A:33:ASP:HB3	1:A:77:ILE:HG22	2.00	0.43
1:A:234:THR:HB	1:A:235:PRO:HD2	2.01	0.43
1:C:14:GLU:O	1:C:18:ILE:HG13	2.19	0.43
1:D:197:ASP:HB2	1:D:243:TYR:OH	2.18	0.43
1:C:276:GLU:HG3	3:C:3513:HOH:O	2.17	0.43
1:B:316:LYS:HB2	1:B:319:ASN:ND2	2.33	0.43
1:B:301:TYR:HB3	1:B:304:ALA:HB3	2.00	0.43
1:B:262:PRO:CG	1:C:294:PRO:HG3	2.49	0.42
1:D:313:TRP:CE2	1:D:315:GLY:HA2	2.54	0.42
1:B:234:THR:HB	1:B:235:PRO:HD2	2.01	0.42
1:A:320:LEU:O	1:A:324:GLN:HG3	2.20	0.42
1:D:287:ASN:ND2	1:D:338:CYS:HA	2.35	0.42
1:C:202:GLN:O	1:C:206:GLU:HG3	2.20	0.42
1:D:196:HIS:HB2	1:D:200:ARG:HG2	2.01	0.42
1:A:229:LYS:HG3	1:A:268:THR:O	2.20	0.42
1:C:61:LEU:C	1:C:61:LEU:HD23	2.41	0.41
1:A:152:LYS:HG3	1:A:153:ILE:N	2.34	0.41
1:A:196:HIS:HB2	1:A:200:ARG:HG2	2.01	0.41
1:A:197:ASP:HB2	1:A:243:TYR:OH	2.19	0.41
1:D:222:TYR:CZ	1:D:224:GLU:HB2	2.55	0.41
1:A:240:THR:HG22	3:A:3106:HOH:O	2.20	0.41
1:B:262:PRO:HD2	1:C:257:ARG:O	2.20	0.41
1:A:119:ASN:ND2	3:A:3214:HOH:O	2.52	0.41
1:D:321:LYS:HB2	3:D:3178:HOH:O	2.20	0.41
1:C:17:ASP:O	1:C:21:ARG:HG3	2.20	0.41
1:C:61:LEU:HD11	1:C:323:ALA:HB3	2.03	0.41
1:A:335:SER:O	1:A:339:GLN:HG3	2.21	0.41
1:B:155:GLU:HG2	1:B:156:HIS:NE2	2.36	0.41
1:D:164:MET:C	1:D:164:MET:SD	2.99	0.41
1:C:92:PRO:HB3	3:C:3407:HOH:O	2.21	0.41
1:A:203:TYR:CG	1:D:3:SER:HB2	2.56	0.41
1:D:276:GLU:OE2	1:D:307:ALA:HB3	2.20	0.41
3:B:3059:HOH:O	1:C:200:ARG:HD2	2.21	0.40
1:D:25:PRO:HG2	3:D:3080:HOH:O	2.21	0.40
1:D:42:ARG:NH1	3:D:3271:HOH:O	2.54	0.40
1:A:292:LEU:HD23	1:A:293:LYS:N	2.35	0.40
1:D:233:VAL:O	1:D:248:ILE:HG23	2.22	0.40
1:A:343:THR:HA	1:A:344:PRO:HD2	1.84	0.40
1:A:1:PRO:HA	3:D:3151:HOH:O	2.21	0.40
1:B:268:THR:HB	1:B:300:SER:HB2	2.03	0.40

Continued on next page...

Continued from previous page...

Atom-1	Atom-2	Interatomic distance (Å)	Clash overlap (Å)
1:D:261:PRO:HA	1:D:262:PRO:HD3	1.94	0.40

There are no symmetry-related clashes.

5.3 Torsion angles (i)

5.3.1 Protein backbone (i)

In the following table, the Percentiles column shows the percent Ramachandran outliers of the chain as a percentile score with respect to all X-ray entries followed by that with respect to entries of similar resolution.

The Analysed column shows the number of residues for which the backbone conformation was analysed, and the total number of residues.

Mol	Chain	Analysed	Favoured	Allowed	Outliers	Percentiles
1	A	346/363 (95%)	329 (95%)	14 (4%)	3 (1%)	17 7
1	B	346/363 (95%)	329 (95%)	14 (4%)	3 (1%)	17 7
1	C	349/363 (96%)	335 (96%)	12 (3%)	2 (1%)	25 14
1	D	358/363 (99%)	343 (96%)	11 (3%)	4 (1%)	14 5
All	All	1399/1452 (96%)	1336 (96%)	51 (4%)	12 (1%)	17 7

All (12) Ramachandran outliers are listed below:

Mol	Chain	Res	Type
1	A	5	PRO
1	A	188	PRO
1	B	5	PRO
1	B	188	PRO
1	C	5	PRO
1	D	67	ASP
1	D	346	GLY
1	C	188	PRO
1	D	5	PRO
1	A	67	ASP
1	D	188	PRO
1	B	344	PRO

5.3.2 Protein sidechains (i)

In the following table, the Percentiles column shows the percent sidechain outliers of the chain as a percentile score with respect to all X-ray entries followed by that with respect to entries of similar resolution.

The Analysed column shows the number of residues for which the sidechain conformation was analysed, and the total number of residues.

Mol	Chain	Analysed	Rotameric	Outliers	Percentiles	
1	A	284/291 (98%)	276 (97%)	8 (3%)	43	33
1	B	284/291 (98%)	278 (98%)	6 (2%)	53	45
1	C	285/291 (98%)	280 (98%)	5 (2%)	59	52
1	D	289/291 (99%)	284 (98%)	5 (2%)	60	54
All	All	1142/1164 (98%)	1118 (98%)	24 (2%)	53	45

All (24) residues with a non-rotameric sidechain are listed below:

Mol	Chain	Res	Type
1	A	50	ASN
1	A	53	GLU
1	A	59	ARG
1	A	173	TYR
1	A	230	PRO
1	A	295	TRP
1	A	318	GLU
1	A	321	LYS
1	B	59	ARG
1	B	173	TYR
1	B	193	ASP
1	B	230	PRO
1	B	277	GLU
1	B	295	TRP
1	C	59	ARG
1	C	173	TYR
1	C	230	PRO
1	C	295	TRP
1	C	318	GLU
1	D	59	ARG
1	D	173	TYR
1	D	193	ASP
1	D	230	PRO
1	D	295	TRP

Sometimes sidechains can be flipped to improve hydrogen bonding and reduce clashes. All (28) such sidechains are listed below:

Mol	Chain	Res	Type
1	A	44	GLN
1	A	50	ASN
1	A	119	ASN
1	A	180	ASN
1	A	220	HIS
1	A	241	GLN
1	A	245	HIS
1	A	319	ASN
1	B	95	GLN
1	B	119	ASN
1	B	136	GLN
1	B	179	GLN
1	B	220	HIS
1	B	237	HIS
1	B	319	ASN
1	C	2	HIS
1	C	241	GLN
1	C	245	HIS
1	C	319	ASN
1	C	347	GLN
1	D	54	ASN
1	D	85	GLN
1	D	95	GLN
1	D	180	ASN
1	D	241	GLN
1	D	284	ASN
1	D	319	ASN
1	D	360	ASN

5.3.3 RNA (i)

There are no RNA molecules in this entry.

5.4 Non-standard residues in protein, DNA, RNA chains (i)

There are no non-standard protein/DNA/RNA residues in this entry.

5.5 Carbohydrates (i)

There are no monosaccharides in this entry.

5.6 Ligand geometry (i)

4 ligands are modelled in this entry.

In the following table, the Counts columns list the number of bonds (or angles) for which Mogul statistics could be retrieved, the number of bonds (or angles) that are observed in the model and the number of bonds (or angles) that are defined in the Chemical Component Dictionary. The Link column lists molecule types, if any, to which the group is linked. The Z score for a bond length (or angle) is the number of standard deviations the observed value is removed from the expected value. A bond length (or angle) with $|Z| > 2$ is considered an outlier worth inspection. RMSZ is the root-mean-square of all Z scores of the bond lengths (or angles).

Mol	Type	Chain	Res	Link	Bond lengths			Bond angles		
					Counts	RMSZ	$\#\|Z\| > 2$	Counts	RMSZ	$\#\|Z\| > 2$
2	13P	B	3002	1	8,8,9	1.13	1 (12%)	10,10,12	1.17	1 (10%)
2	13P	C	3003	1	8,8,9	1.21	1 (12%)	10,10,12	1.17	1 (10%)
2	13P	D	3004	1	8,8,9	1.19	1 (12%)	10,10,12	1.17	1 (10%)
2	13P	A	3001	1	8,8,9	1.16	1 (12%)	10,10,12	1.11	1 (10%)

In the following table, the Chirals column lists the number of chiral outliers, the number of chiral centers analysed, the number of these observed in the model and the number defined in the Chemical Component Dictionary. Similar counts are reported in the Torsion and Rings columns. '-' means no outliers of that kind were identified.

Mol	Type	Chain	Res	Link	Chirals	Torsions	Rings
2	13P	B	3002	1	-	1/6/6/8	-
2	13P	C	3003	1	-	1/6/6/8	-
2	13P	D	3004	1	-	1/6/6/8	-
2	13P	A	3001	1	-	1/6/6/8	-

All (4) bond length outliers are listed below:

Mol	Chain	Res	Type	Atoms	Z	Observed(Å)	Ideal(Å)
2	C	3003	13P	C2-C3	-2.80	1.35	1.50
2	D	3004	13P	C2-C3	-2.77	1.35	1.50
2	A	3001	13P	C2-C3	-2.76	1.35	1.50
2	B	3002	13P	C2-C3	-2.69	1.35	1.50

All (4) bond angle outliers are listed below:

Mol	Chain	Res	Type	Atoms	Z	Observed(^{o})	Ideal(^{o})
2	C	3003	13P	C1-C2-C3	3.29	121.12	113.95
2	D	3004	13P	C1-C2-C3	3.28	121.10	113.95
2	B	3002	13P	C1-C2-C3	3.26	121.06	113.95
2	A	3001	13P	C1-C2-C3	3.06	120.61	113.95

There are no chirality outliers.

All (4) torsion outliers are listed below:

Mol	Chain	Res	Type	Atoms
2	C	3003	13P	O1-C1-C2-C3
2	D	3004	13P	O1-C1-C2-C3
2	A	3001	13P	O1-C1-C2-C3
2	B	3002	13P	O1-C1-C2-C3

There are no ring outliers.

1 monomer is involved in 1 short contact:

Mol	Chain	Res	Type	Clashes	Symm-Clashes
2	A	3001	13P	1	0

5.7 Other polymers (i)

There are no such residues in this entry.

5.8 Polymer linkage issues (i)

There are no chain breaks in this entry.

6 Fit of model and data (i)

6.1 Protein, DNA and RNA chains (i)

In the following table, the column labelled '#RSRZ> 2' contains the number (and percentage) of RSRZ outliers, followed by percent RSRZ outliers for the chain as percentile scores relative to all X-ray entries and entries of similar resolution. The OWAB column contains the minimum, median, 95th percentile and maximum values of the occupancy-weighted average B-factor per residue. The column labelled 'Q< 0.9' lists the number of (and percentage) of residues with an average occupancy less than 0.9.

Mol	Chain	Analysed	<RSRZ>	#RSRZ>2			OWAB(Å^2)	Q<0.9
1	A	350/363 (96%)	-0.18	7 (2%)	65	67	10, 19, 43, 64	2 (0%)
1	B	350/363 (96%)	-0.16	6 (1%)	70	72	9, 19, 45, 67	2 (0%)
1	C	353/363 (97%)	-0.08	9 (2%)	57	59	9, 18, 41, 71	4 (1%)
1	D	360/363 (99%)	0.18	27 (7%)	14	15	11, 23, 60, 106	0
All	All	1413/1452 (97%)	-0.06	49 (3%)	44	45	9, 20, 47, 106	8 (0%)

All (49) RSRZ outliers are listed below:

Mol	Chain	Res	Type	RSRZ
1	B	345	SER	18.7
1	A	345	SER	10.2
1	C	348	ALA	9.9
1	A	359	SER	9.4
1	D	349	GLY	8.4
1	C	347	GLN	7.9
1	D	348	ALA	7.9
1	D	347	GLN	6.5
1	B	359	SER	5.8
1	D	355	SER	5.6
1	D	351	ALA	4.4
1	B	45	SER	4.3
1	C	344	PRO	4.2
1	C	345	SER	4.1
1	D	359	SER	3.8
1	D	345	SER	3.8
1	B	47	GLY	3.7
1	C	44	GLN	3.6
1	D	352	ALA	3.6
1	D	353	SER	3.5
1	D	358	ILE	3.5

Continued on next page...

Continued from previous page...

Mol	Chain	Res	Type	RSRZ
1	D	343	THR	3.5
1	C	359	SER	3.3
1	C	346	GLY	3.2
1	B	344	PRO	3.2
1	D	340	GLY	3.1
1	D	350	ALA	3.1
1	A	46	ILE	3.0
1	D	346	GLY	3.0
1	D	40	ALA	3.0
1	D	354	GLU	2.9
1	D	41	LYS	2.9
1	D	44	GLN	2.8
1	A	44	GLN	2.8
1	B	46	ILE	2.8
1	D	344	PRO	2.7
1	D	357	PHE	2.5
1	D	356	LEU	2.5
1	D	45	SER	2.4
1	D	42	ARG	2.4
1	A	47	GLY	2.2
1	A	316	LYS	2.2
1	D	321	LYS	2.2
1	D	66	ASP	2.1
1	D	360	ASN	2.1
1	D	320	LEU	2.1
1	C	45	SER	2.1
1	C	41	LYS	2.0
1	A	2	HIS	2.0

6.2 Non-standard residues in protein, DNA, RNA chains (i)

There are no non-standard protein/DNA/RNA residues in this entry.

6.3 Carbohydrates (i)

There are no monosaccharides in this entry.

6.4 Ligands (i)

In the following table, the Atoms column lists the number of modelled atoms in the group and the number defined in the chemical component dictionary. The B-factors column lists the minimum,

median, 95th percentile and maximum values of B factors of atoms in the group. The column labelled 'Q< 0.9' lists the number of atoms with occupancy less than 0.9.

Mol	Type	Chain	Res	Atoms	RSCC	RSR	B-factors(Å^2)	Q<0.9
2	13P	D	3004	9/10	0.95	0.11	26,28,29,30	0
2	13P	C	3003	9/10	0.96	0.12	21,22,23,23	0
2	13P	B	3002	9/10	0.96	0.11	23,23,25,29	0
2	13P	A	3001	9/10	0.97	0.08	19,21,22,23	0

6.5 Other polymers (i)

There are no such residues in this entry.