Full wwPDB X-ray Structure Validation Report (i)

Jun 17, 2024 – 09:16 AM EDT

PDB ID	:	5O3M
Title	:	Crystal structure of apo Klebsiella pneumoniae 3,4-dihydroxybenzoic acid decarboxylase (AroY)
Authors	:	Marshall, S.A.; Leys, D.
Deposited on	:	2017-05-24
Resolution	:	2.23 Å(reported)

This is a Full wwPDB X-ray Structure Validation Report for a publicly released PDB entry.

We welcome your comments at *validation@mail.wwpdb.org*
A user guide is available at
https://www.wwpdb.org/validation/2017/XrayValidationReportHelp
with specific help available everywhere you see the (i) symbol.

The types of validation reports are described at
http://www.wwpdb.org/validation/2017/FAQs#types.

The following versions of software and data (see references (i)) were used in the production of this report:

MolProbity	:	4.02b-467
Mogul	:	1.8.5 (274361), CSD as541be (2020)
Xtriage (Phenix)	:	1.13
EDS	:	2.37.1
Percentile statistics	:	20191225.v01 (using entries in the PDB archive December 25th 2019)
Refmac	:	5.8.0158
CCP4	:	7.0.044 (Gargrove)
Ideal geometry (proteins)	:	Engh & Huber (2001)
Ideal geometry (DNA, RNA)	:	Parkinson et al. (1996)
Validation Pipeline (wwPDB-VP)	:	2.37.1

1 Overall quality at a glance (i)

The following experimental techniques were used to determine the structure:
X-RAY DIFFRACTION

The reported resolution of this entry is 2.23 Å.

Percentile scores (ranging between 0-100) for global validation metrics of the entry are shown in the following graphic. The table shows the number of entries on which the scores are based.

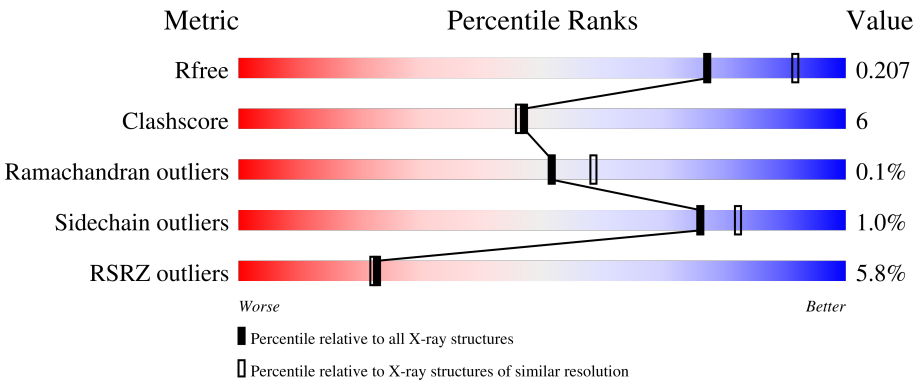

Metric	Whole archive (#Entries)	Similar resolution (#Entries, resolution range(Å))
R_{free}	130704	2391 (2.26-2.22)
Clashscore	141614	2539 (2.26-2.22)
Ramachandran outliers	138981	2489 (2.26-2.22)
Sidechain outliers	138945	2490 (2.26-2.22)
RSRZ outliers	127900	2353 (2.26-2.22)

The table below summarises the geometric issues observed across the polymeric chains and their fit to the electron density. The red, orange, yellow and green segments of the lower bar indicate the fraction of residues that contain outliers for >=3, 2, 1 and 0 types of geometric quality criteria respectively. A grey segment represents the fraction of residues that are not modelled. The numeric value for each fraction is indicated below the corresponding segment, with a dot representing fractions <=5% The upper red bar (where present) indicates the fraction of residues that have poor fit to the electron density. The numeric value is given above the bar.

Mol	Chain	Length	Quality of chain
1	A	522	3% 84% 10% 6%
1	B	522	10% 77% 17% 6%
1	C	522	3% 82% 11% 6%
1	D	522	2% 85% 8% 6%
1	E	522	3% 83% 11% 6%

Continued on next page...

Continued from previous page...

Mol	Chain	Length	Quality of chain
1	F	522	12% 75% 18% 7%

2 Entry composition (i)

There are 3 unique types of molecules in this entry. The entry contains 23577 atoms, of which 0 are hydrogens and 0 are deuteriums.

In the tables below, the ZeroOcc column contains the number of atoms modelled with zero occupancy, the AltConf column contains the number of residues with at least one atom in alternate conformation and the Trace column contains the number of residues modelled with at most 2 atoms.

- Molecule 1 is a protein called Protocatechuate decarboxylase.

Mol	Chain	Residues	Atoms					ZeroOcc	AltConf	Trace
			Total	C	N	O	S			
1	A	493	3734	2366	653	698	17	0	0	0
1	B	490	3706	2349	647	693	17	0	0	0
1	C	489	3701	2346	646	692	17	0	0	0
1	D	491	3711	2352	648	694	17	0	0	0
1	E	491	3720	2358	651	694	17	0	0	0
1	F	488	3689	2338	643	691	17	0	0	0

There are 120 discrepancies between the modelled and reference sequences:

Chain	Residue	Modelled	Actual	Comment	Reference
A	-19	MET	-	initiating methionine	UNP B9A9M6
A	-18	GLY	-	expression tag	UNP B9A9M6
A	-17	SER	-	expression tag	UNP B9A9M6
A	-16	SER	-	expression tag	UNP B9A9M6
A	-15	HIS	-	expression tag	UNP B9A9M6
A	-14	HIS	-	expression tag	UNP B9A9M6
A	-13	HIS	-	expression tag	UNP B9A9M6
A	-12	HIS	-	expression tag	UNP B9A9M6
A	-11	HIS	-	expression tag	UNP B9A9M6
A	-10	HIS	-	expression tag	UNP B9A9M6
A	-9	SER	-	expression tag	UNP B9A9M6
A	-8	SER	-	expression tag	UNP B9A9M6
A	-7	GLY	-	expression tag	UNP B9A9M6
A	-6	LEU	-	expression tag	UNP B9A9M6
A	-5	VAL	-	expression tag	UNP B9A9M6
A	-4	PRO	-	expression tag	UNP B9A9M6
A	-3	ARG	-	expression tag	UNP B9A9M6

Continued on next page...

Continued from previous page...

Chain	Residue	Modelled	Actual	Comment	Reference
A	-2	GLY	-	expression tag	UNP B9A9M6
A	-1	SER	-	expression tag	UNP B9A9M6
A	0	HIS	-	expression tag	UNP B9A9M6
B	-19	MET	-	initiating methionine	UNP B9A9M6
B	-18	GLY	-	expression tag	UNP B9A9M6
B	-17	SER	-	expression tag	UNP B9A9M6
B	-16	SER	-	expression tag	UNP B9A9M6
B	-15	HIS	-	expression tag	UNP B9A9M6
B	-14	HIS	-	expression tag	UNP B9A9M6
B	-13	HIS	-	expression tag	UNP B9A9M6
B	-12	HIS	-	expression tag	UNP B9A9M6
B	-11	HIS	-	expression tag	UNP B9A9M6
B	-10	HIS	-	expression tag	UNP B9A9M6
B	-9	SER	-	expression tag	UNP B9A9M6
B	-8	SER	-	expression tag	UNP B9A9M6
B	-7	GLY	-	expression tag	UNP B9A9M6
B	-6	LEU	-	expression tag	UNP B9A9M6
B	-5	VAL	-	expression tag	UNP B9A9M6
B	-4	PRO	-	expression tag	UNP B9A9M6
B	-3	ARG	-	expression tag	UNP B9A9M6
B	-2	GLY	-	expression tag	UNP B9A9M6
B	-1	SER	-	expression tag	UNP B9A9M6
B	0	HIS	-	expression tag	UNP B9A9M6
C	-19	MET	-	initiating methionine	UNP B9A9M6
C	-18	GLY	-	expression tag	UNP B9A9M6
C	-17	SER	-	expression tag	UNP B9A9M6
C	-16	SER	-	expression tag	UNP B9A9M6
C	-15	HIS	-	expression tag	UNP B9A9M6
C	-14	HIS	-	expression tag	UNP B9A9M6
C	-13	HIS	-	expression tag	UNP B9A9M6
C	-12	HIS	-	expression tag	UNP B9A9M6
C	-11	HIS	-	expression tag	UNP B9A9M6
C	-10	HIS	-	expression tag	UNP B9A9M6
C	-9	SER	-	expression tag	UNP B9A9M6
C	-8	SER	-	expression tag	UNP B9A9M6
C	-7	GLY	-	expression tag	UNP B9A9M6
C	-6	LEU	-	expression tag	UNP B9A9M6
C	-5	VAL	-	expression tag	UNP B9A9M6
C	-4	PRO	-	expression tag	UNP B9A9M6
C	-3	ARG	-	expression tag	UNP B9A9M6
C	-2	GLY	-	expression tag	UNP B9A9M6
C	-1	SER	-	expression tag	UNP B9A9M6

Continued on next page...

Continued from previous page...

Chain	Residue	Modelled	Actual	Comment	Reference
C	0	HIS	-	expression tag	UNP B9A9M6
D	-19	MET	-	initiating methionine	UNP B9A9M6
D	-18	GLY	-	expression tag	UNP B9A9M6
D	-17	SER	-	expression tag	UNP B9A9M6
D	-16	SER	-	expression tag	UNP B9A9M6
D	-15	HIS	-	expression tag	UNP B9A9M6
D	-14	HIS	-	expression tag	UNP B9A9M6
D	-13	HIS	-	expression tag	UNP B9A9M6
D	-12	HIS	-	expression tag	UNP B9A9M6
D	-11	HIS	-	expression tag	UNP B9A9M6
D	-10	HIS	-	expression tag	UNP B9A9M6
D	-9	SER	-	expression tag	UNP B9A9M6
D	-8	SER	-	expression tag	UNP B9A9M6
D	-7	GLY	-	expression tag	UNP B9A9M6
D	-6	LEU	-	expression tag	UNP B9A9M6
D	-5	VAL	-	expression tag	UNP B9A9M6
D	-4	PRO	-	expression tag	UNP B9A9M6
D	-3	ARG	-	expression tag	UNP B9A9M6
D	-2	GLY	-	expression tag	UNP B9A9M6
D	-1	SER	-	expression tag	UNP B9A9M6
D	0	HIS	-	expression tag	UNP B9A9M6
E	-19	MET	-	initiating methionine	UNP B9A9M6
E	-18	GLY	-	expression tag	UNP B9A9M6
E	-17	SER	-	expression tag	UNP B9A9M6
E	-16	SER	-	expression tag	UNP B9A9M6
E	-15	HIS	-	expression tag	UNP B9A9M6
E	-14	HIS	-	expression tag	UNP B9A9M6
E	-13	HIS	-	expression tag	UNP B9A9M6
E	-12	HIS	-	expression tag	UNP B9A9M6
E	-11	HIS	-	expression tag	UNP B9A9M6
E	-10	HIS	-	expression tag	UNP B9A9M6
E	-9	SER	-	expression tag	UNP B9A9M6
E	-8	SER	-	expression tag	UNP B9A9M6
E	-7	GLY	-	expression tag	UNP B9A9M6
E	-6	LEU	-	expression tag	UNP B9A9M6
E	-5	VAL	-	expression tag	UNP B9A9M6
E	-4	PRO	-	expression tag	UNP B9A9M6
E	-3	ARG	-	expression tag	UNP B9A9M6
E	-2	GLY	-	expression tag	UNP B9A9M6
E	-1	SER	-	expression tag	UNP B9A9M6
E	0	HIS	-	expression tag	UNP B9A9M6
F	-19	MET	-	initiating methionine	UNP B9A9M6

Continued on next page...

Continued from previous page...

Chain	Residue	Modelled	Actual	Comment	Reference
F	-18	GLY	-	expression tag	UNP B9A9M6
F	-17	SER	-	expression tag	UNP B9A9M6
F	-16	SER	-	expression tag	UNP B9A9M6
F	-15	HIS	-	expression tag	UNP B9A9M6
F	-14	HIS	-	expression tag	UNP B9A9M6
F	-13	HIS	-	expression tag	UNP B9A9M6
F	-12	HIS	-	expression tag	UNP B9A9M6
F	-11	HIS	-	expression tag	UNP B9A9M6
F	-10	HIS	-	expression tag	UNP B9A9M6
F	-9	SER	-	expression tag	UNP B9A9M6
F	-8	SER	-	expression tag	UNP B9A9M6
F	-7	GLY	-	expression tag	UNP B9A9M6
F	-6	LEU	-	expression tag	UNP B9A9M6
F	-5	VAL	-	expression tag	UNP B9A9M6
F	-4	PRO	-	expression tag	UNP B9A9M6
F	-3	ARG	-	expression tag	UNP B9A9M6
F	-2	GLY	-	expression tag	UNP B9A9M6
F	-1	SER	-	expression tag	UNP B9A9M6
F	0	HIS	-	expression tag	UNP B9A9M6

- Molecule 2 is pentane-1,5-diol (three-letter code: 9JE) (formula: $C_5H_{12}O_2$).

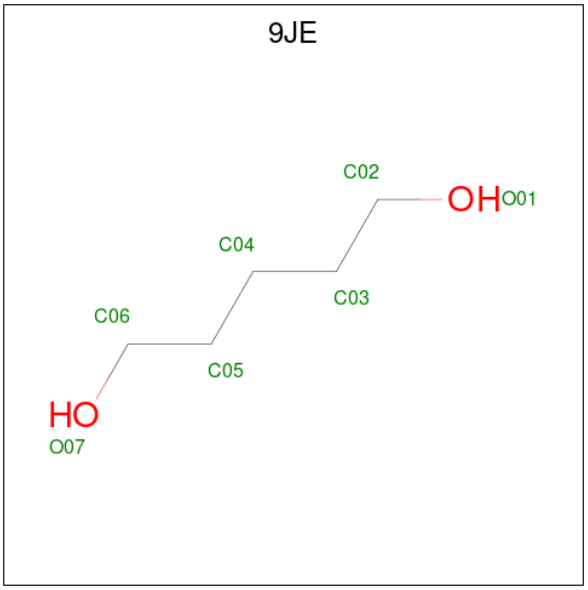

Mol	Chain	Residues	Atoms				ZeroOcc	AltConf
			Total	C	O			
2	A	1	7	5	2		0	0
			Total	C	O			
2	A	1	7	5	2		0	0

Continued on next page...

Continued from previous page...

Mol	Chain	Residues	Atoms			ZeroOcc	AltConf
			Total	C	O		
2	B	1	7	5	2	0	0
2	C	1	7	5	2	0	0
2	C	1	7	5	2	0	0
2	C	1	7	5	2	0	0
2	D	1	7	5	2	0	0
2	D	1	7	5	2	0	0
2	E	1	7	5	2	0	0
2	F	1	7	5	2	0	0

- Molecule 3 is water.

Mol	Chain	Residues	Atoms		ZeroOcc	AltConf
			Total	O		
3	A	235	235	235	0	0
3	B	176	176	176	0	0
3	C	178	178	178	0	0
3	D	311	311	311	0	0
3	E	217	217	217	0	0
3	F	129	129	129	0	0

3 Residue-property plots (i)

These plots are drawn for all protein, RNA, DNA and oligosaccharide chains in the entry. The first graphic for a chain summarises the proportions of the various outlier classes displayed in the second graphic. The second graphic shows the sequence view annotated by issues in geometry and electron density. Residues are color-coded according to the number of geometric quality criteria for which they contain at least one outlier: green = 0, yellow = 1, orange = 2 and red = 3 or more. A red dot above a residue indicates a poor fit to the electron density (RSRZ > 2). Stretches of 2 or more consecutive residues without any outlier are shown as a green connector. Residues present in the sample, but not in the model, are shown in grey.

• Molecule 1: Protocatechuate decarboxylase

Chain A:

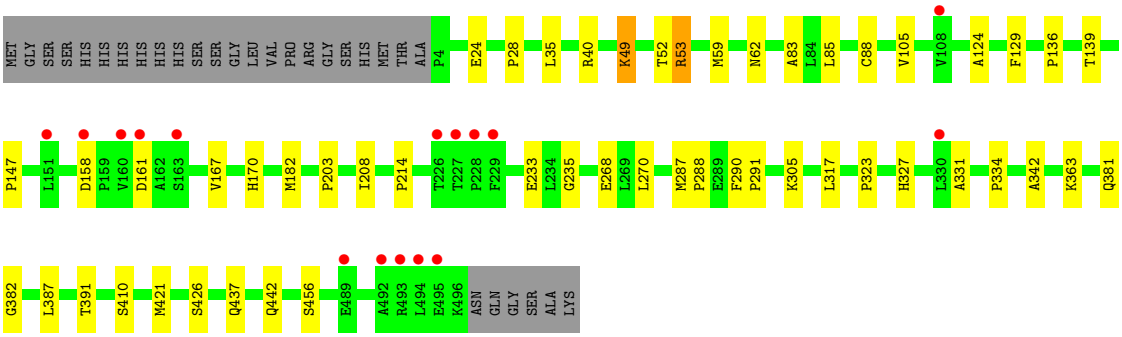

• Molecule 1: Protocatechuate decarboxylase

Chain B:

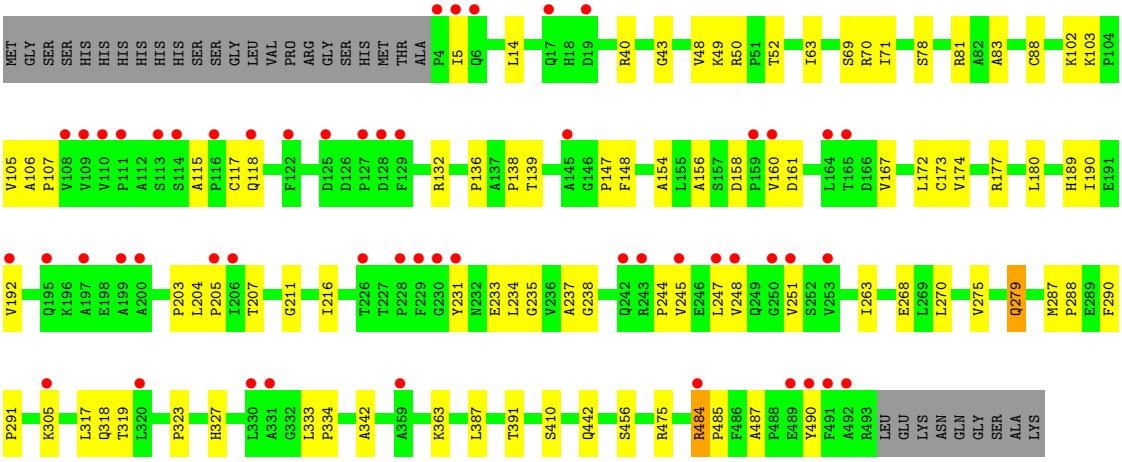

• Molecule 1: Protocatechuate decarboxylase

Chain C:

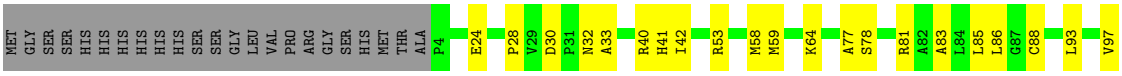

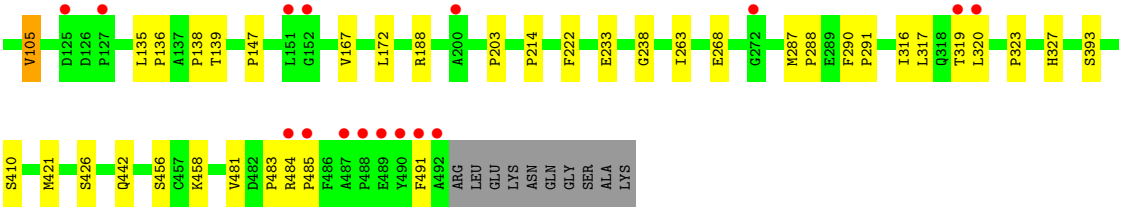

- Molecule 1: Protocatechuate decarboxylase

Chain D:

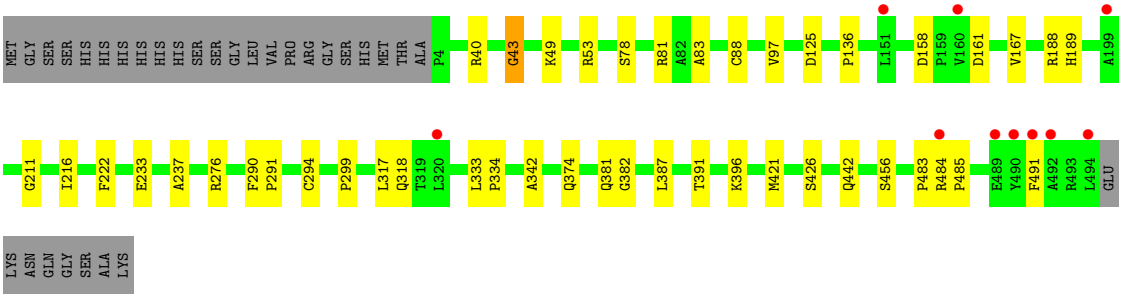

- Molecule 1: Protocatechuate decarboxylase

Chain E:

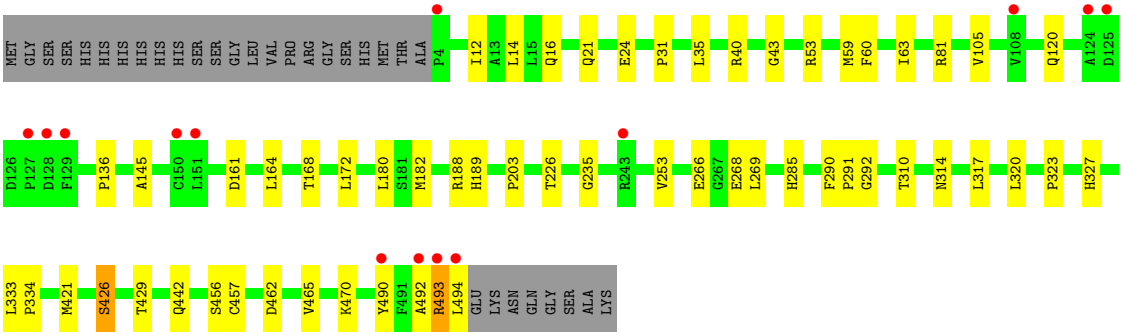

- Molecule 1: Protocatechuate decarboxylase

Chain F:

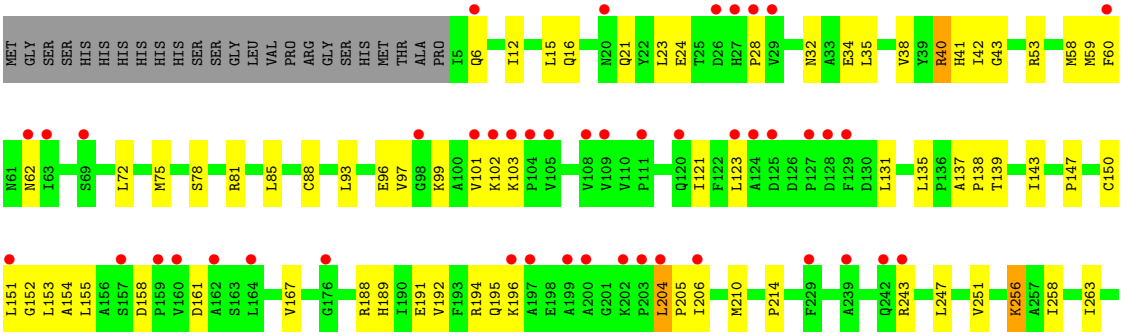

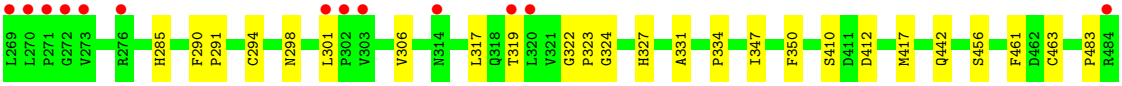
L269
L270
P271
G272
V273
R276
H285
F290
P291
C294
N298
L301
P302
V303
V306
N314
L317
Q318
T319
L320
V321
G322
P323
G324
H327
A331
P334
I347
F350
S410
D411
D412
M417
Q442
S456
F461
D462
C463
P483
R484

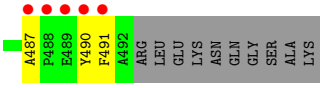
A487
P488
E489
Y490
F491
A492
ARG
LEU
GLU
LYS
ASN
GLN
GLY
SER
ALA
LYS

4 Data and refinement statistics (i)

Property	Value	Source
Space group	P 1 21 1	Depositor
Cell constants a, b, c, α, β, γ	81.88Å 209.70Å 116.02Å 90.00° 107.63° 90.00°	Depositor
Resolution (Å)	38.08 – 2.23 39.78 – 2.23	Depositor EDS
% Data completeness (in resolution range)	99.8 (38.08-2.23) 99.9 (39.78-2.23)	Depositor EDS
R_{merge}	0.11	Depositor
R_{sym}	(Not available)	Depositor
$< I/\sigma(I) >$ [1]	1.63 (at 2.22Å)	Xtriage
Refinement program	PHENIX (dev_2689)	Depositor
R, R_{free}	0.163 , 0.209 0.162 , 0.207	Depositor DCC
R_{free} test set	8848 reflections (4.90%)	wwPDB-VP
Wilson B-factor (Å^2)	35.3	Xtriage
Anisotropy	0.468	Xtriage
Bulk solvent k_{sol}(e/Å^3), B_{sol}(Å^2)	0.32 , 48.8	EDS
L-test for twinning[2]	$< \|L\| > = 0.48$, $< L^2 > = 0.32$	Xtriage
Estimated twinning fraction	No twinning to report.	Xtriage
F_o,F_c correlation	0.96	EDS
Total number of atoms	23577	wwPDB-VP
Average B, all atoms (Å^2)	50.0	wwPDB-VP

Xtriage's analysis on translational NCS is as follows: *The largest off-origin peak in the Patterson function is 2.82% of the height of the origin peak. No significant pseudotranslation is detected.*

[1]Intensities estimated from amplitudes.

[2]Theoretical values of $< |L| >$, $< L^2 >$ for acentric reflections are 0.5, 0.333 respectively for untwinned datasets, and 0.375, 0.2 for perfectly twinned datasets.

5 Model quality (i)

5.1 Standard geometry (i)

Bond lengths and bond angles in the following residue types are not validated in this section: 9JE

The Z score for a bond length (or angle) is the number of standard deviations the observed value is removed from the expected value. A bond length (or angle) with $|Z| > 5$ is considered an outlier worth inspection. RMSZ is the root-mean-square of all Z scores of the bond lengths (or angles).

Mol	Chain	Bond lengths		Bond angles	
		RMSZ	$\#\|Z\|>5$	RMSZ	$\#\|Z\|>5$
1	A	0.47	1/3821 (0.0%)	0.57	1/5209 (0.0%)
1	B	0.43	0/3793	0.55	0/5172
1	C	0.36	0/3788	0.57	3/5165 (0.1%)
1	D	0.43	0/3798	0.58	0/5179
1	E	0.41	0/3807	0.55	0/5190
1	F	0.37	0/3774	0.52	0/5146
All	All	0.41	1/22781 (0.0%)	0.56	4/31061 (0.0%)

All (1) bond length outliers are listed below:

Mol	Chain	Res	Type	Atoms	Z	Observed(Å)	Ideal(Å)
1	A	52	THR	C-N	-5.75	1.20	1.34

All (4) bond angle outliers are listed below:

Mol	Chain	Res	Type	Atoms	Z	Observed(^{o})	Ideal(^{o})
1	C	77	ALA	C-N-CA	8.70	143.46	121.70
1	C	77	ALA	O-C-N	-8.46	109.17	122.70
1	C	77	ALA	CA-C-N	6.21	130.87	117.20
1	A	53	ARG	O-C-N	-5.26	114.29	122.70

There are no chirality outliers.

There are no planarity outliers.

5.2 Too-close contacts (i)

In the following table, the Non-H and H(model) columns list the number of non-hydrogen atoms and hydrogen atoms in the chain respectively. The H(added) column lists the number of hydrogen atoms added and optimized by MolProbity. The Clashes column lists the number of clashes within

the asymmetric unit, whereas Symm-Clashes lists symmetry-related clashes.

Mol	Chain	Non-H	H(model)	H(added)	Clashes	Symm-Clashes
1	A	3734	0	3723	34	0
1	B	3706	0	3694	70	0
1	C	3701	0	3691	40	0
1	D	3711	0	3696	24	0
1	E	3720	0	3716	32	0
1	F	3689	0	3679	81	0
2	A	14	0	0	0	0
2	B	7	0	0	0	0
2	C	21	0	0	0	0
2	D	14	0	0	0	0
2	E	7	0	0	0	0
2	F	7	0	0	0	0
3	A	235	0	0	2	0
3	B	176	0	0	4	0
3	C	178	0	0	1	0
3	D	311	0	0	2	0
3	E	217	0	0	2	0
3	F	129	0	0	1	0
All	All	23577	0	22199	274	0

The all-atom clashscore is defined as the number of clashes found per 1000 atoms (including hydrogen atoms). The all-atom clashscore for this structure is 6.

All (274) close contacts within the same asymmetric unit are listed below, sorted by their clash magnitude.

Atom-1	Atom-2	Interatomic distance (Å)	Clash overlap (Å)
1:F:42:ILE:HG21	1:F:58:MET:HE3	1.41	1.00
1:B:115:ALA:HB2	1:B:248:VAL:HG21	1.41	0.98
1:C:53:ARG:NH1	1:F:490:TYR:OH	1.97	0.97
1:C:42:ILE:HG21	1:C:58:MET:HE3	1.48	0.95
1:C:42:ILE:HD13	1:C:58:MET:HE1	1.51	0.91
1:F:72:LEU:HD21	1:F:75:MET:HE3	1.51	0.90
1:B:387:LEU:O	1:B:391:THR:HG23	1.77	0.83
1:F:32:ASN:HA	1:F:139:THR:HG22	1.60	0.83
1:C:53:ARG:NH1	1:F:490:TYR:HH	1.76	0.80
1:B:50:ARG:HD3	1:B:52:THR:HG22	1.64	0.80
1:E:168:THR:HG22	1:E:188:ARG:HH21	1.46	0.79
1:F:42:ILE:HG21	1:F:58:MET:CE	2.13	0.79
1:C:136:PRO:O	1:C:317:LEU:HD22	1.86	0.76
1:B:234:LEU:HB3	1:B:245:VAL:HG11	1.68	0.75

Continued on next page...

Continued from previous page...

Atom-1	Atom-2	Interatomic distance (Å)	Clash overlap (Å)
1:C:42:ILE:HD13	1:C:58:MET:CE	2.18	0.74
1:C:30:ASP:OD2	3:C:701:HOH:O	2.05	0.74
1:F:35:LEU:HD21	1:F:60:PHE:CD2	2.23	0.73
1:E:188:ARG:HD2	1:E:189:HIS:H	1.53	0.72
1:F:6:GLN:HG3	1:F:243:ARG:HE	1.53	0.72
1:B:167:VAL:HG21	1:B:234:LEU:HD22	1.70	0.72
1:F:42:ILE:HD13	1:F:58:MET:HE1	1.71	0.71
1:F:15:LEU:HD21	1:F:85:LEU:HD21	1.74	0.70
1:F:155:LEU:O	1:F:206:ILE:HD12	1.93	0.69
1:F:6:GLN:HG3	1:F:243:ARG:HH21	1.58	0.67
1:F:85:LEU:HD13	1:F:214:PRO:HG3	1.77	0.66
1:F:23:LEU:HD23	1:F:58:MET:CE	2.27	0.65
1:B:204:LEU:HD12	1:B:205:PRO:HD2	1.78	0.64
1:F:99:LYS:HA	1:F:102:LYS:HD2	1.78	0.64
1:F:290:PHE:CG	1:F:291:PRO:HD3	2.33	0.64
1:B:189:HIS:HA	1:B:192:VAL:HG12	1.79	0.64
1:C:42:ILE:HG21	1:C:58:MET:CE	2.27	0.64
1:F:6:GLN:CG	1:F:243:ARG:HE	2.11	0.64
1:F:42:ILE:HD13	1:F:58:MET:CE	2.27	0.63
1:B:102:LYS:O	1:B:103:LYS:HD2	1.99	0.63
1:E:168:THR:CG2	1:E:188:ARG:HH21	2.11	0.63
1:B:139:THR:HG22	1:B:147:PRO:HA	1.81	0.62
1:A:387:LEU:O	1:A:391:THR:HG23	1.98	0.62
1:A:53:ARG:NH1	1:B:490:TYR:OH	2.33	0.62
1:F:72:LEU:HD21	1:F:75:MET:CE	2.25	0.62
1:F:158:ASP:HB3	1:F:161:ASP:O	2.00	0.61
1:B:167:VAL:HG21	1:B:234:LEU:CD2	2.30	0.61
1:E:168:THR:HG21	1:E:188:ARG:HE	1.66	0.61
1:A:342:ALA:CB	1:A:391:THR:HG21	2.32	0.60
1:F:24:GLU:HG2	1:F:59:MET:HB3	1.84	0.59
1:C:290:PHE:CG	1:C:291:PRO:HD3	2.38	0.59
1:B:342:ALA:CB	1:B:391:THR:HG21	2.34	0.58
1:D:484:ARG:HB2	1:D:485:PRO:HD3	1.86	0.58
1:B:107:PRO:HB2	1:B:247:LEU:HD11	1.84	0.58
1:B:275:VAL:HB	1:B:279:GLN:NE2	2.19	0.58
1:F:121:ILE:HD12	1:F:251:VAL:HG11	1.85	0.58
1:C:97:VAL:HG11	1:C:222:PHE:CE1	2.38	0.58
1:D:211:GLY:HA2	1:D:318:GLN:OE1	2.03	0.58
1:E:60:PHE:O	1:E:63:ILE:HD11	2.04	0.58
1:A:182:MET:HE3	1:A:208:ILE:HD12	1.84	0.57
1:E:290:PHE:CG	1:E:291:PRO:HD3	2.40	0.57

Continued on next page...

Continued from previous page...

Atom-1	Atom-2	Interatomic distance (Å)	Clash overlap (Å)
1:B:139:THR:HG23	3:B:731:HOH:O	2.03	0.57
1:F:442:GLN:CD	1:F:456:SER:HB2	2.26	0.56
1:B:275:VAL:HB	1:B:279:GLN:HE22	1.70	0.56
1:E:421:MET:HG2	1:E:426:SER:HB2	1.87	0.56
1:B:136:PRO:O	1:B:317:LEU:HD22	2.05	0.56
1:B:107:PRO:HB2	1:B:247:LEU:CD1	2.35	0.56
1:C:135:LEU:HD21	1:C:263:ILE:HG21	1.87	0.56
1:F:154:ALA:HB1	1:F:206:ILE:HD11	1.86	0.56
1:B:231:TYR:HB3	1:B:234:LEU:HD23	1.87	0.56
1:A:437:GLN:NE2	3:A:703:HOH:O	2.39	0.56
1:C:85:LEU:HD13	1:C:214:PRO:HG3	1.88	0.55
1:F:152:GLY:HA2	1:F:210:MET:HG2	1.88	0.55
1:F:194:ARG:HA	1:F:204:LEU:HD12	1.89	0.55
1:F:263:ILE:HD12	1:F:317:LEU:HD13	1.88	0.55
1:F:6:GLN:HG3	1:F:243:ARG:NE	2.22	0.55
1:B:156:ALA:HB3	1:B:190:ILE:CD1	2.37	0.55
1:B:484:ARG:CB	1:B:485:PRO:HD3	2.37	0.55
1:D:342:ALA:CB	1:D:391:THR:HG21	2.37	0.55
1:F:191:GLU:O	1:F:195:GLN:HG3	2.06	0.54
1:A:49:LYS:HG3	1:B:475:ARG:HD3	1.88	0.54
1:B:147:PRO:HB2	1:B:174:VAL:HG22	1.89	0.54
1:F:32:ASN:OD1	1:F:139:THR:HG21	2.07	0.54
1:D:158:ASP:HB3	1:D:161:ASP:O	2.08	0.54
1:F:323:PRO:HB2	1:F:327:HIS:HB2	1.90	0.54
1:A:170:HIS:HB2	1:A:182:MET:HE2	1.90	0.54
1:B:83:ALA:HB1	1:B:88:CYS:O	2.07	0.54
1:F:15:LEU:CD2	1:F:85:LEU:HD21	2.37	0.54
1:F:23:LEU:HD23	1:F:58:MET:HE1	1.90	0.54
1:B:270:LEU:HD11	1:B:305:LYS:HB2	1.90	0.53
1:F:81:ARG:O	1:F:85:LEU:HG	2.07	0.53
1:C:78:SER:HB3	1:C:81:ARG:HB3	1.91	0.53
1:B:107:PRO:HB3	1:B:245:VAL:HG13	1.89	0.53
1:F:6:GLN:HG3	1:F:243:ARG:NH2	2.24	0.53
1:A:136:PRO:O	1:A:317:LEU:HD22	2.09	0.53
1:C:167:VAL:HB	1:C:233:GLU:HB2	1.91	0.53
1:F:97:VAL:O	1:F:101:VAL:HG23	2.09	0.52
1:F:23:LEU:HD23	1:F:58:MET:HE2	1.92	0.52
1:B:158:ASP:OD1	1:B:160:VAL:HG22	2.10	0.52
1:B:156:ALA:HB3	1:B:190:ILE:HD11	1.92	0.52
1:B:234:LEU:HB3	1:B:245:VAL:CG1	2.40	0.52
1:A:290:PHE:CG	1:A:291:PRO:HD3	2.45	0.52

Continued on next page...

Continued from previous page...

Atom-1	Atom-2	Interatomic distance (Å)	Clash overlap (Å)
1:B:333:LEU:HB2	1:B:334:PRO:HD3	1.92	0.52
1:A:421:MET:HG2	1:A:426:SER:HB2	1.92	0.51
1:B:106:ALA:O	1:B:244:PRO:HB3	2.10	0.51
1:A:287:MET:HB2	1:A:288:PRO:HD2	1.92	0.51
1:F:78:SER:HB3	1:F:81:ARG:HB3	1.92	0.51
1:F:15:LEU:HD22	1:F:21:GLN:HB3	1.92	0.51
1:B:5:ILE:HD11	1:B:14:LEU:HD22	1.93	0.51
1:C:32:ASN:O	1:C:33:ALA:HB3	2.11	0.51
1:E:292:GLY:HA2	3:E:839:HOH:O	2.10	0.51
1:E:24:GLU:HG2	1:E:59:MET:HB3	1.93	0.51
1:B:105:VAL:HG22	1:B:238:GLY:HA3	1.93	0.51
1:F:247:LEU:HD23	1:F:256:LYS:HB3	1.93	0.51
1:C:139:THR:HG22	1:C:147:PRO:HA	1.93	0.50
1:B:102:LYS:C	1:B:103:LYS:HD2	2.31	0.50
1:D:136:PRO:O	1:D:317:LEU:HD22	2.11	0.50
1:A:287:MET:HB2	1:A:288:PRO:CD	2.41	0.50
1:F:417:MET:HE1	1:F:461:PHE:CD1	2.46	0.50
1:A:203:PRO:HB2	1:A:268:GLU:HB2	1.92	0.50
1:A:290:PHE:CZ	1:A:363:LYS:HD3	2.47	0.49
1:B:275:VAL:CG1	1:B:279:GLN:HE22	2.25	0.49
1:B:167:VAL:HB	1:B:233:GLU:HB2	1.94	0.49
1:F:204:LEU:HD23	1:F:205:PRO:HD2	1.93	0.49
1:E:442:GLN:CD	1:E:456:SER:HB2	2.32	0.49
1:A:85:LEU:HD13	1:A:214:PRO:HG3	1.94	0.49
1:C:135:LEU:HD23	1:C:263:ILE:HD13	1.95	0.49
1:E:136:PRO:O	1:E:317:LEU:HD22	2.12	0.49
1:B:484:ARG:N	1:B:485:PRO:CD	2.75	0.49
1:C:323:PRO:HB2	1:C:327:HIS:HB2	1.92	0.49
1:E:31:PRO:HD3	1:E:63:ILE:HG23	1.95	0.49
1:C:105:VAL:HG22	1:C:238:GLY:HA3	1.94	0.49
1:E:323:PRO:HB2	1:E:327:HIS:HB2	1.94	0.49
1:F:155:LEU:HD11	1:F:258:ILE:HD12	1.94	0.49
1:B:132:ARG:NH2	1:B:177:ARG:HB3	2.27	0.48
1:B:189:HIS:HA	1:B:192:VAL:CG1	2.43	0.48
1:F:192:VAL:O	1:F:196:LYS:HG3	2.13	0.48
1:F:103:LYS:HB2	1:F:103:LYS:HE2	1.61	0.48
1:B:118:GLN:NE2	1:B:251:VAL:HG13	2.29	0.48
1:E:21:GLN:OE1	1:E:81:ARG:HD3	2.13	0.48
1:A:83:ALA:HB1	1:A:88:CYS:O	2.14	0.48
1:B:290:PHE:CG	1:B:291:PRO:HD3	2.48	0.48
1:D:421:MET:HG2	1:D:426:SER:HB2	1.95	0.48

Continued on next page...

Continued from previous page...

Atom-1	Atom-2	Interatomic distance (Å)	Clash overlap (Å)
1:A:139:THR:HG23	3:A:762:HOH:O	2.14	0.48
1:A:323:PRO:HB2	1:A:327:HIS:HB2	1.95	0.48
1:D:43:GLY:HA2	1:D:53:ARG:O	2.14	0.48
1:F:155:LEU:HD23	1:F:167:VAL:HG22	1.96	0.48
1:D:342:ALA:HB2	1:D:391:THR:HG21	1.96	0.48
1:B:442:GLN:CD	1:B:456:SER:HB2	2.35	0.48
1:F:41:HIS:O	1:F:53:ARG:NH1	2.41	0.47
1:A:170:HIS:CB	1:A:182:MET:HE2	2.44	0.47
1:C:320:LEU:HD12	1:C:320:LEU:C	2.34	0.47
1:E:105:VAL:O	1:E:235:GLY:HA2	2.14	0.47
1:B:139:THR:HG21	3:B:863:HOH:O	2.14	0.47
1:F:12:ILE:O	1:F:16:GLN:HG3	2.15	0.47
1:F:88:CYS:SG	1:F:93:LEU:HD13	2.55	0.47
1:A:158:ASP:HB3	1:A:161:ASP:O	2.15	0.47
1:F:121:ILE:HG22	1:F:123:LEU:CD2	2.44	0.47
1:C:203:PRO:HB2	1:C:268:GLU:HB3	1.95	0.47
1:D:49:LYS:NZ	3:D:701:HOH:O	2.43	0.47
1:E:182:MET:HE2	1:E:269:LEU:HD21	1.97	0.47
1:A:24:GLU:HG2	1:A:59:MET:HB3	1.97	0.47
1:B:49:LYS:HG2	3:B:796:HOH:O	2.14	0.47
1:C:83:ALA:HB1	1:C:88:CYS:O	2.15	0.47
1:F:28:PRO:HG3	1:F:62:ASN:ND2	2.30	0.47
1:F:487:ALA:HB1	1:F:490:TYR:HB3	1.96	0.47
1:B:203:PRO:HB2	1:B:268:GLU:HB3	1.97	0.46
1:F:32:ASN:HA	1:F:139:THR:CG2	2.40	0.46
1:F:40:ARG:HD2	3:F:732:HOH:O	2.15	0.46
1:A:410:SER:HB3	1:B:410:SER:HB3	1.96	0.46
1:C:393:SER:O	1:C:458:LYS:NZ	2.49	0.46
1:F:35:LEU:HD21	1:F:60:PHE:CG	2.49	0.46
1:B:48:VAL:HG12	1:B:49:LYS:O	2.15	0.46
1:D:374:GLN:NE2	3:D:705:HOH:O	2.48	0.46
1:F:150:CYS:O	1:F:151:LEU:HD23	2.16	0.46
1:D:387:LEU:O	1:D:391:THR:HG23	2.15	0.46
1:D:78:SER:HB3	1:D:81:ARG:HB3	1.97	0.46
1:D:396:LYS:HE2	3:E:792:HOH:O	2.15	0.46
1:B:290:PHE:CZ	1:B:363:LYS:HD3	2.51	0.46
1:E:490:TYR:O	1:E:493:ARG:HG2	2.16	0.46
1:C:320:LEU:HD12	1:C:320:LEU:O	2.16	0.45
1:B:211:GLY:HA2	1:B:318:GLN:OE1	2.16	0.45
1:A:139:THR:HG22	1:A:147:PRO:HA	1.99	0.45
1:C:41:HIS:CG	1:F:483:PRO:HG3	2.51	0.45

Continued on next page...

Continued from previous page...

Atom-1	Atom-2	Interatomic distance (Å)	Clash overlap (Å)
1:A:342:ALA:HB2	1:A:391:THR:HG21	1.98	0.45
1:D:167:VAL:HB	1:D:233:GLU:HB2	1.98	0.45
1:F:137:ALA:O	1:F:147:PRO:HB3	2.17	0.45
1:C:172:LEU:N	1:C:172:LEU:HD12	2.31	0.45
1:D:83:ALA:HB1	1:D:88:CYS:O	2.17	0.45
1:B:138:PRO:HG2	1:B:319:THR:HG21	1.98	0.45
1:B:275:VAL:CB	1:B:279:GLN:HE22	2.30	0.45
1:B:323:PRO:HB2	1:B:327:HIS:HB2	1.99	0.45
1:F:58:MET:HG2	1:F:60:PHE:CE2	2.52	0.45
1:A:28:PRO:HG3	1:A:62:ASN:ND2	2.32	0.45
1:A:35:LEU:C	1:A:35:LEU:HD23	2.37	0.45
1:B:172:LEU:HD12	1:B:172:LEU:N	2.32	0.44
1:A:105:VAL:O	1:A:235:GLY:HA2	2.16	0.44
1:D:483:PRO:HB2	1:D:491:PHE:CZ	2.52	0.44
1:B:287:MET:HB2	1:B:288:PRO:HD2	2.00	0.44
1:C:410:SER:HB3	1:F:410:SER:HB3	1.99	0.44
1:D:290:PHE:CG	1:D:291:PRO:HD3	2.52	0.44
1:B:154:ALA:HA	1:B:207:THR:O	2.18	0.44
1:C:28:PRO:HB2	1:C:64:LYS:HE2	1.99	0.44
1:A:182:MET:HE3	1:A:208:ILE:CD1	2.47	0.44
1:B:158:ASP:HB3	1:B:161:ASP:O	2.17	0.44
1:E:12:ILE:O	1:E:16:GLN:HG3	2.18	0.44
1:B:174:VAL:HG23	1:B:174:VAL:O	2.18	0.44
1:C:188:ARG:HA	1:C:188:ARG:HD2	1.85	0.44
1:E:492:ALA:O	1:E:494:LEU:N	2.50	0.44
1:F:417:MET:HG2	1:F:463:CYS:SG	2.58	0.44
1:B:78:SER:HB3	1:B:81:ARG:HB3	1.98	0.44
1:C:59:MET:HE1	1:C:316:ILE:HD13	2.00	0.44
1:C:287:MET:HB2	1:C:288:PRO:CD	2.48	0.43
1:F:194:ARG:CA	1:F:204:LEU:HD12	2.47	0.43
1:B:263:ILE:HD12	1:B:317:LEU:HD12	2.00	0.43
1:B:317:LEU:HA	3:B:718:HOH:O	2.18	0.43
1:F:155:LEU:CD2	1:F:167:VAL:HG22	2.48	0.43
1:F:35:LEU:HD13	1:F:35:LEU:C	2.39	0.43
1:F:143:ILE:HD11	1:F:294:CYS:SG	2.59	0.43
1:B:177:ARG:H	1:B:177:ARG:HG2	1.58	0.43
1:D:333:LEU:HB2	1:D:334:PRO:HD3	2.01	0.43
1:F:34:GLU:O	1:F:38:VAL:HG23	2.18	0.43
1:F:138:PRO:HG2	1:F:319:THR:HG21	2.01	0.43
1:C:481:VAL:O	1:C:483:PRO:HD3	2.19	0.43
1:D:276:ARG:HG2	1:D:299:PRO:HA	2.01	0.43

Continued on next page...

Continued from previous page...

Atom-1	Atom-2	Interatomic distance (Å)	Clash overlap (Å)
1:D:381:GLN:HG2	1:D:382:GLY:N	2.33	0.43
1:F:143:ILE:HD12	1:F:285:HIS:ND1	2.34	0.43
1:C:85:LEU:HA	1:C:85:LEU:HD23	1.83	0.43
1:E:253:VAL:HG22	1:E:266:GLU:HB3	2.00	0.43
1:A:442:GLN:CD	1:A:456:SER:HB2	2.39	0.42
1:C:442:GLN:CD	1:C:456:SER:HB2	2.40	0.42
1:F:188:ARG:HG3	1:F:189:HIS:N	2.33	0.42
1:F:347:ILE:HG22	1:F:350:PHE:HB2	2.02	0.42
1:F:487:ALA:O	1:F:491:PHE:HD2	2.02	0.42
1:C:138:PRO:HG2	1:C:319:THR:HG21	2.02	0.42
1:F:96:GLU:OE1	1:F:96:GLU:HA	2.19	0.42
1:F:290:PHE:CD1	1:F:291:PRO:HD3	2.54	0.42
1:A:331:ALA:O	1:A:334:PRO:HD2	2.18	0.42
1:B:63:ILE:HG12	1:B:71:ILE:HD12	2.01	0.42
1:B:63:ILE:HD12	1:B:69:SER:O	2.20	0.42
1:D:188:ARG:HG3	1:D:189:HIS:N	2.35	0.42
1:F:43:GLY:HA2	1:F:53:ARG:O	2.20	0.42
1:A:167:VAL:HB	1:A:233:GLU:HB2	2.02	0.42
1:C:484:ARG:HB2	1:C:485:PRO:HD3	2.02	0.42
1:F:131:LEU:HD22	1:F:306:VAL:HG21	2.02	0.42
1:F:153:LEU:HD21	1:F:167:VAL:HG13	2.02	0.42
1:A:124:ALA:HA	1:A:129:PHE:CG	2.55	0.42
1:E:63:ILE:HD12	1:E:63:ILE:N	2.35	0.42
1:E:203:PRO:HB2	1:E:268:GLU:HB3	2.01	0.42
1:E:429:THR:HB	1:E:457:CYS:SG	2.60	0.42
1:A:381:GLN:HG2	1:A:382:GLY:N	2.35	0.41
1:D:97:VAL:HG11	1:D:222:PHE:CE1	2.55	0.41
1:E:35:LEU:C	1:E:35:LEU:HD23	2.41	0.41
1:F:301:LEU:HD23	1:F:301:LEU:HA	1.95	0.41
1:B:287:MET:HB2	1:B:288:PRO:CD	2.51	0.41
1:E:333:LEU:HB2	1:E:334:PRO:HD3	2.02	0.41
1:B:216:ILE:HA	1:B:237:ALA:HB2	2.03	0.41
1:C:86:LEU:HD12	1:C:93:LEU:HD11	2.02	0.41
1:B:105:VAL:O	1:B:235:GLY:HA2	2.21	0.41
1:B:148:PHE:CE1	1:B:173:CYS:HB2	2.56	0.41
1:B:487:ALA:HB1	1:B:490:TYR:HB3	2.02	0.41
1:C:421:MET:HG2	1:C:426:SER:HB2	2.01	0.41
1:D:442:GLN:CD	1:D:456:SER:HB2	2.41	0.41
1:E:43:GLY:HA2	1:E:53:ARG:O	2.21	0.41
1:E:120:GLN:O	1:E:310:THR:HA	2.21	0.41
1:E:172:LEU:N	1:E:172:LEU:HD12	2.36	0.41

Continued on next page...

Continued from previous page...

Atom-1	Atom-2	Interatomic distance (Å)	Clash overlap (Å)
1:E:426:SER:HB3	1:E:462:ASP:O	2.20	0.41
1:F:298:ASN:HB3	1:F:301:LEU:HG	2.03	0.41
1:F:322:GLY:HA3	1:F:324:GLY:N	2.35	0.41
1:F:331:ALA:O	1:F:334:PRO:HD2	2.21	0.41
1:F:135:LEU:HD22	1:F:263:ILE:HD13	2.03	0.41
1:B:290:PHE:CE1	1:B:363:LYS:HD3	2.56	0.40
1:C:135:LEU:CD2	1:C:263:ILE:HG21	2.51	0.40
1:E:161:ASP:OD2	1:E:164:LEU:HD23	2.21	0.40
1:A:270:LEU:HD11	1:A:305:LYS:HB2	2.03	0.40
1:B:63:ILE:CD1	1:B:70:ARG:HA	2.51	0.40
1:D:216:ILE:HA	1:D:237:ALA:HB2	2.02	0.40
1:C:24:GLU:HG2	1:C:59:MET:HB3	2.02	0.40
1:E:145:ALA:HB2	1:E:285:HIS:O	2.21	0.40
1:E:465:VAL:HG11	1:E:470:LYS:HA	2.03	0.40

There are no symmetry-related clashes.

5.3 Torsion angles (i)

5.3.1 Protein backbone (i)

In the following table, the Percentiles column shows the percent Ramachandran outliers of the chain as a percentile score with respect to all X-ray entries followed by that with respect to entries of similar resolution.

The Analysed column shows the number of residues for which the backbone conformation was analysed, and the total number of residues.

Mol	Chain	Analysed	Favoured	Allowed	Outliers	Percentiles	
1	A	491/522 (94%)	473 (96%)	18 (4%)	0	100	100
1	B	488/522 (94%)	472 (97%)	15 (3%)	1 (0%)	47	53
1	C	487/522 (93%)	469 (96%)	17 (4%)	1 (0%)	47	53
1	D	489/522 (94%)	469 (96%)	19 (4%)	1 (0%)	47	53
1	E	489/522 (94%)	471 (96%)	17 (4%)	1 (0%)	47	53
1	F	486/522 (93%)	466 (96%)	20 (4%)	0	100	100
All	All	2930/3132 (94%)	2820 (96%)	106 (4%)	4 (0%)	51	58

All (4) Ramachandran outliers are listed below:

Mol	Chain	Res	Type
1	E	493	ARG
1	C	491	PHE
1	B	43	GLY
1	D	43	GLY

5.3.2 Protein sidechains (i)

In the following table, the Percentiles column shows the percent sidechain outliers of the chain as a percentile score with respect to all X-ray entries followed by that with respect to entries of similar resolution.

The Analysed column shows the number of residues for which the sidechain conformation was analysed, and the total number of residues.

Mol	Chain	Analysed	Rotameric	Outliers	Percentiles
1	A	395/419 (94%)	393 (100%)	2 (0%)	88 92
1	B	392/419 (94%)	387 (99%)	5 (1%)	69 76
1	C	392/419 (94%)	390 (100%)	2 (0%)	88 92
1	D	392/419 (94%)	389 (99%)	3 (1%)	81 87
1	E	394/419 (94%)	387 (98%)	7 (2%)	59 66
1	F	390/419 (93%)	386 (99%)	4 (1%)	76 82
All	All	2355/2514 (94%)	2332 (99%)	23 (1%)	76 82

All (23) residues with a non-rotameric sidechain are listed below:

Mol	Chain	Res	Type
1	A	40	ARG
1	A	49	LYS
1	B	40	ARG
1	B	117	CYS
1	B	180	LEU
1	B	279	GLN
1	B	484	ARG
1	C	40	ARG
1	C	105	VAL
1	D	40	ARG
1	D	125	ASP
1	D	294	CYS
1	E	14	LEU
1	E	40	ARG
1	E	180	LEU

Continued on next page...

Continued from previous page...

Mol	Chain	Res	Type
1	E	226	THR
1	E	314	ASN
1	E	320	LEU
1	E	426	SER
1	F	40	ARG
1	F	204	LEU
1	F	256	LYS
1	F	412	ASP

Sometimes sidechains can be flipped to improve hydrogen bonding and reduce clashes. All (6) such sidechains are listed below:

Mol	Chain	Res	Type
1	B	118	GLN
1	B	279	GLN
1	C	6	GLN
1	F	209	ASN
1	F	232	ASN
1	F	453	ASN

5.3.3 RNA (i)

There are no RNA molecules in this entry.

5.4 Non-standard residues in protein, DNA, RNA chains (i)

There are no non-standard protein/DNA/RNA residues in this entry.

5.5 Carbohydrates (i)

There are no monosaccharides in this entry.

5.6 Ligand geometry (i)

10 ligands are modelled in this entry.

In the following table, the Counts columns list the number of bonds (or angles) for which Mogul statistics could be retrieved, the number of bonds (or angles) that are observed in the model and the number of bonds (or angles) that are defined in the Chemical Component Dictionary. The Link column lists molecule types, if any, to which the group is linked. The Z score for a bond

length (or angle) is the number of standard deviations the observed value is removed from the expected value. A bond length (or angle) with $|Z| > 2$ is considered an outlier worth inspection. RMSZ is the root-mean-square of all Z scores of the bond lengths (or angles).

Mol	Type	Chain	Res	Link	Bond lengths			Bond angles		
					Counts	RMSZ	$\#\|Z\| > 2$	Counts	RMSZ	$\#\|Z\| > 2$
2	9JE	E	601	-	6,6,6	0.45	0	5,5,5	0.36	0
2	9JE	A	601	-	6,6,6	0.34	0	5,5,5	0.25	0
2	9JE	F	601	-	6,6,6	0.38	0	5,5,5	0.19	0
2	9JE	C	603	-	6,6,6	0.43	0	5,5,5	1.21	1 (20%)
2	9JE	C	602	-	6,6,6	0.67	0	5,5,5	0.67	0
2	9JE	A	602	-	6,6,6	0.40	0	5,5,5	1.11	0
2	9JE	B	601	-	6,6,6	0.43	0	5,5,5	0.22	0
2	9JE	D	601	-	6,6,6	0.35	0	5,5,5	0.23	0
2	9JE	D	602	-	6,6,6	0.95	0	5,5,5	0.49	0
2	9JE	C	601	-	6,6,6	0.31	0	5,5,5	0.54	0

In the following table, the Chirals column lists the number of chiral outliers, the number of chiral centers analysed, the number of these observed in the model and the number defined in the Chemical Component Dictionary. Similar counts are reported in the Torsion and Rings columns. '-' means no outliers of that kind were identified.

Mol	Type	Chain	Res	Link	Chirals	Torsions	Rings
2	9JE	E	601	-	-	1/4/4/4	-
2	9JE	A	601	-	-	2/4/4/4	-
2	9JE	F	601	-	-	1/4/4/4	-
2	9JE	C	603	-	-	3/4/4/4	-
2	9JE	C	602	-	-	2/4/4/4	-
2	9JE	A	602	-	-	1/4/4/4	-
2	9JE	B	601	-	-	1/4/4/4	-
2	9JE	D	601	-	-	0/4/4/4	-
2	9JE	D	602	-	-	3/4/4/4	-
2	9JE	C	601	-	-	3/4/4/4	-

There are no bond length outliers.

All (1) bond angle outliers are listed below:

Mol	Chain	Res	Type	Atoms	Z	Observed(^{o})	Ideal(^{o})
2	C	603	9JE	O01-C02-C03	-2.20	97.22	111.66

There are no chirality outliers.

All (17) torsion outliers are listed below:

Mol	Chain	Res	Type	Atoms
2	F	601	9JE	O01-C02-C03-C04
2	C	601	9JE	C02-C03-C04-C05
2	A	601	9JE	C02-C03-C04-C05
2	D	602	9JE	C02-C03-C04-C05
2	A	602	9JE	C04-C05-C06-O07
2	B	601	9JE	C04-C05-C06-O07
2	C	603	9JE	C03-C04-C05-C06
2	C	603	9JE	C04-C05-C06-O07
2	C	602	9JE	C02-C03-C04-C05
2	C	601	9JE	C03-C04-C05-C06
2	A	601	9JE	O01-C02-C03-C04
2	C	601	9JE	C04-C05-C06-O07
2	D	602	9JE	C04-C05-C06-O07
2	C	602	9JE	C03-C04-C05-C06
2	D	602	9JE	C03-C04-C05-C06
2	E	601	9JE	C02-C03-C04-C05
2	C	603	9JE	C02-C03-C04-C05

There are no ring outliers.

No monomer is involved in short contacts.

5.7 Other polymers (i)

There are no such residues in this entry.

5.8 Polymer linkage issues (i)

There are no chain breaks in this entry.

6 Fit of model and data (i)

6.1 Protein, DNA and RNA chains (i)

In the following table, the column labelled '#RSRZ> 2' contains the number (and percentage) of RSRZ outliers, followed by percent RSRZ outliers for the chain as percentile scores relative to all X-ray entries and entries of similar resolution. The OWAB column contains the minimum, median, 95th percentile and maximum values of the occupancy-weighted average B-factor per residue. The column labelled 'Q< 0.9' lists the number of (and percentage) of residues with an average occupancy less than 0.9.

Mol	Chain	Analysed	<RSRZ>	#RSRZ>2			OWAB(Å^2)	Q<0.9
1	A	493/522 (94%)	-0.00	16 (3%)	47	47	25, 44, 68, 85	0
1	B	490/522 (93%)	0.41	53 (10%)	5	5	24, 55, 100, 116	0
1	C	489/522 (93%)	0.02	16 (3%)	46	46	25, 50, 72, 103	0
1	D	491/522 (94%)	-0.20	10 (2%)	65	66	23, 36, 58, 83	0
1	E	491/522 (94%)	-0.08	14 (2%)	51	52	24, 44, 62, 76	0
1	F	488/522 (93%)	0.55	63 (12%)	3	2	25, 70, 102, 125	0
All	All	2942/3132 (93%)	0.12	172 (5%)	23	22	23, 46, 91, 125	0

All (172) RSRZ outliers are listed below:

Mol	Chain	Res	Type	RSRZ
1	F	127	PRO	6.4
1	B	492	ALA	6.2
1	F	490	TYR	6.0
1	B	243	ARG	5.4
1	F	159	PRO	5.2
1	E	127	PRO	5.0
1	B	230	GLY	4.8
1	D	492	ALA	4.8
1	B	247	LEU	4.7
1	B	229	PHE	4.6
1	F	160	VAL	4.6
1	F	128	ASP	4.6
1	C	488	PRO	4.5
1	F	303	VAL	4.5
1	B	108	VAL	4.2
1	A	492	ALA	4.2
1	B	4	PRO	4.1
1	C	490	TYR	4.0
1	E	129	PHE	3.9

Continued on next page...

Continued from previous page...

Mol	Chain	Res	Type	RSRZ
1	F	129	PHE	3.8
1	B	251	VAL	3.8
1	F	29	VAL	3.8
1	C	491	PHE	3.8
1	B	248	VAL	3.7
1	F	28	PRO	3.6
1	C	127	PRO	3.6
1	F	302	PRO	3.6
1	F	199	ALA	3.5
1	F	491	PHE	3.5
1	C	487	ALA	3.5
1	B	160	VAL	3.5
1	B	125	ASP	3.5
1	B	127	PRO	3.4
1	B	164	LEU	3.4
1	F	271	PRO	3.4
1	F	487	ALA	3.4
1	F	301	LEU	3.4
1	C	272	GLY	3.4
1	F	276	ARG	3.3
1	C	484	ARG	3.3
1	F	197	ALA	3.2
1	A	229	PHE	3.2
1	B	192	VAL	3.2
1	F	269	LEU	3.2
1	F	484	ARG	3.2
1	F	204	LEU	3.1
1	B	195	GLN	3.1
1	B	109	VAL	3.1
1	B	231	TYR	3.1
1	B	6	GLN	3.1
1	F	320	LEU	3.1
1	F	60	PHE	3.1
1	F	157	SER	3.0
1	F	203	PRO	3.0
1	F	124	ALA	3.0
1	F	229	PHE	3.0
1	F	488	PRO	3.0
1	F	242	GLN	3.0
1	B	253	VAL	3.0
1	F	202	LYS	3.0
1	C	489	GLU	2.9

Continued on next page...

Continued from previous page...

Mol	Chain	Res	Type	RSRZ
1	B	129	PHE	2.9
1	F	272	GLY	2.9
1	A	160	VAL	2.9
1	B	245	VAL	2.9
1	D	489	GLU	2.9
1	E	492	ALA	2.9
1	F	69	SER	2.8
1	B	165	THR	2.8
1	B	122	PHE	2.8
1	B	113	SER	2.8
1	B	110	VAL	2.8
1	B	491	PHE	2.7
1	C	319	THR	2.7
1	F	270	LEU	2.7
1	D	490	TYR	2.7
1	A	151	LEU	2.7
1	B	226	THR	2.7
1	D	491	PHE	2.7
1	D	494	LEU	2.7
1	F	273	VAL	2.7
1	F	111	PRO	2.6
1	B	197	ALA	2.6
1	B	200	ALA	2.6
1	B	242	GLN	2.6
1	B	331	ALA	2.6
1	B	484	ARG	2.6
1	F	98	GLY	2.6
1	F	125	ASP	2.6
1	C	485	PRO	2.6
1	E	151	LEU	2.6
1	A	495	GLU	2.6
1	F	105	VAL	2.6
1	B	19	ASP	2.6
1	E	494	LEU	2.6
1	F	314	ASN	2.6
1	D	484	ARG	2.5
1	E	128	ASP	2.5
1	F	489	GLU	2.5
1	F	239	ALA	2.5
1	B	250	GLY	2.5
1	B	320	LEU	2.5
1	F	200	ALA	2.5

Continued on next page...

Continued from previous page...

Mol	Chain	Res	Type	RSRZ
1	F	176	GLY	2.5
1	C	320	LEU	2.5
1	B	118	GLN	2.5
1	B	359	ALA	2.4
1	F	27	HIS	2.4
1	B	330	LEU	2.4
1	D	151	LEU	2.4
1	B	159	PRO	2.4
1	E	243	ARG	2.4
1	F	123	LEU	2.4
1	E	490	TYR	2.4
1	B	111	PRO	2.4
1	F	108	VAL	2.4
1	B	17	GLN	2.4
1	C	151	LEU	2.4
1	F	196	LYS	2.4
1	B	145	ALA	2.4
1	A	108	VAL	2.4
1	D	160	VAL	2.4
1	A	227	THR	2.4
1	E	108	VAL	2.4
1	A	494	LEU	2.3
1	B	206	ILE	2.3
1	B	199	ALA	2.3
1	A	489	GLU	2.3
1	F	63	ILE	2.3
1	B	490	TYR	2.3
1	F	109	VAL	2.3
1	F	104	PRO	2.3
1	A	226	THR	2.3
1	D	320	LEU	2.2
1	F	102	LYS	2.2
1	A	228	PRO	2.2
1	A	493	ARG	2.2
1	C	492	ALA	2.2
1	F	103	LYS	2.2
1	A	161	ASP	2.2
1	B	116	PRO	2.2
1	B	489	GLU	2.2
1	B	5	ILE	2.2
1	F	120	GLN	2.2
1	E	493	ARG	2.2

Continued on next page...

Continued from previous page...

Mol	Chain	Res	Type	RSRZ
1	F	243	ARG	2.2
1	B	128	ASP	2.2
1	E	125	ASP	2.2
1	F	101	VAL	2.2
1	B	305	LYS	2.1
1	C	152	GLY	2.2
1	A	330	LEU	2.1
1	F	151	LEU	2.1
1	F	319	THR	2.1
1	C	200	ALA	2.1
1	C	125	ASP	2.1
1	F	20	ASN	2.1
1	B	205	PRO	2.1
1	B	228	PRO	2.1
1	D	199	ALA	2.1
1	B	114	SER	2.1
1	A	158	ASP	2.1
1	F	6	GLN	2.1
1	F	26	ASP	2.1
1	A	163	SER	2.1
1	F	164	LEU	2.0
1	F	62	ASN	2.0
1	E	4	PRO	2.0
1	E	150	CYS	2.0
1	F	162	ALA	2.0
1	F	206	ILE	2.0
1	E	124	ALA	2.0

6.2 Non-standard residues in protein, DNA, RNA chains (i)

There are no non-standard protein/DNA/RNA residues in this entry.

6.3 Carbohydrates (i)

There are no monosaccharides in this entry.

6.4 Ligands (i)

In the following table, the Atoms column lists the number of modelled atoms in the group and the number defined in the chemical component dictionary. The B-factors column lists the minimum,

median, 95th percentile and maximum values of B factors of atoms in the group. The column labelled 'Q< 0.9' lists the number of atoms with occupancy less than 0.9.

Mol	Type	Chain	Res	Atoms	RSCC	RSR	B-factors(Å^2)	Q<0.9
2	9JE	D	602	7/7	0.80	0.26	42,52,57,59	0
2	9JE	C	601	7/7	0.91	0.19	41,46,50,60	0
2	9JE	A	601	7/7	0.91	0.48	41,51,59,62	0
2	9JE	E	601	7/7	0.91	0.12	37,37,39,47	0
2	9JE	F	601	7/7	0.92	0.13	36,43,46,59	0
2	9JE	C	602	7/7	0.93	0.37	45,48,59,62	0
2	9JE	C	603	7/7	0.94	0.18	39,47,56,60	0
2	9JE	B	601	7/7	0.95	0.19	33,36,41,52	0
2	9JE	D	601	7/7	0.96	0.12	29,32,44,44	0
2	9JE	A	602	7/7	0.97	0.16	33,38,47,51	0

6.5 Other polymers (i)

There are no such residues in this entry.