wwPDB X-ray Structure Validation Summary Report (i)

Aug 30, 2023 – 08:55 AM EDT

PDB ID	:	3N2L
Title	:	2.1 Angstrom resolution crystal structure of an Orotate Phosphoribosyltransferase (pyrE) from Vibrio cholerae O1 biovar eltor str. N16961
Authors	:	Halavaty, A.S.; Minasov, G.; Shuvalova, L.; Dubrovska, I.; Winsor, J.; Kwon, K.; Anderson, W.F.; Center for Structural Genomics of Infectious Diseases (CSGID)
Deposited on	:	2010-05-18
Resolution	:	2.10 Å(reported)

This is a wwPDB X-ray Structure Validation Summary Report for a publicly released PDB entry.

We welcome your comments at *validation@mail.wwpdb.org*
A user guide is available at
https://www.wwpdb.org/validation/2017/XrayValidationReportHelp
with specific help available everywhere you see the (i) symbol.

The types of validation reports are described at
http://www.wwpdb.org/validation/2017/FAQs#types.

The following versions of software and data (see references (1)) were used in the production of this report:

MolProbity	:	4.02b-467
Xtriage (Phenix)	:	1.13
EDS	:	2.35
Percentile statistics	:	20191225.v01 (using entries in the PDB archive December 25th 2019)
Refmac	:	5.8.0158
CCP4	:	7.0.044 (Gargrove)
Ideal geometry (proteins)	:	Engh & Huber (2001)
Ideal geometry (DNA, RNA)	:	Parkinson et al. (1996)
Validation Pipeline (wwPDB-VP)	:	2.35

1 Overall quality at a glance (i)

The following experimental techniques were used to determine the structure:
X-RAY DIFFRACTION

The reported resolution of this entry is 2.10 Å.

Percentile scores (ranging between 0-100) for global validation metrics of the entry are shown in the following graphic. The table shows the number of entries on which the scores are based.

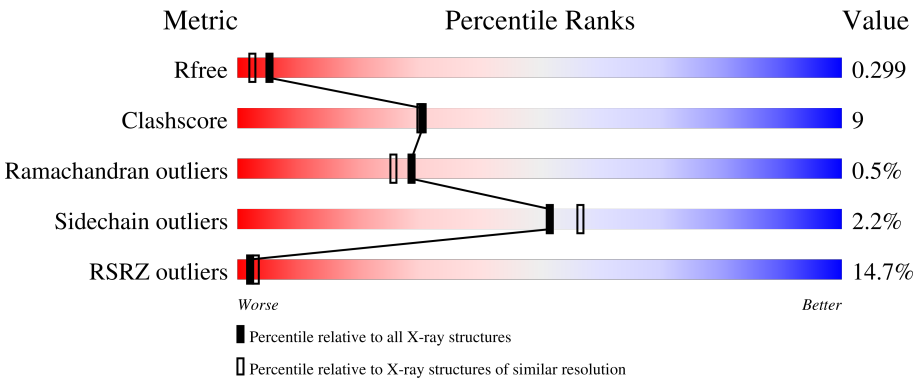

Metric	Whole archive (#Entries)	Similar resolution (#Entries, resolution range(Å))
R_{free}	130704	5197 (2.10-2.10)
Clashscore	141614	5710 (2.10-2.10)
Ramachandran outliers	138981	5647 (2.10-2.10)
Sidechain outliers	138945	5648 (2.10-2.10)
RSRZ outliers	127900	5083 (2.10-2.10)

The table below summarises the geometric issues observed across the polymeric chains and their fit to the electron density. The red, orange, yellow and green segments of the lower bar indicate the fraction of residues that contain outliers for >=3, 2, 1 and 0 types of geometric quality criteria respectively. A grey segment represents the fraction of residues that are not modelled. The numeric value for each fraction is indicated below the corresponding segment, with a dot representing fractions <=5% The upper red bar (where present) indicates the fraction of residues that have poor fit to the electron density. The numeric value is given above the bar.

Mol	Chain	Length	Quality of chain
1	A	238	14% 67% 18% • 14%
1	B	238	11% 58% 14% • 26%
1	C	238	11% 59% 21% • 19%
1	D	238	8% 55% 15% • 29%
1	E	238	15% 65% 19% • 14%

Continued on next page...

Continued from previous page...

Mol	Chain	Length	Quality of chain
1	F	238	12% 66% 8% 26%
1	G	238	11% 63% 18% 18%
1	H	238	10% 58% 12% • 29%

2 Entry composition (i)

There are 3 unique types of molecules in this entry. The entry contains 12436 atoms, of which 0 are hydrogens and 0 are deuteriums.

In the tables below, the ZeroOcc column contains the number of atoms modelled with zero occupancy, the AltConf column contains the number of residues with at least one atom in alternate conformation and the Trace column contains the number of residues modelled with at most 2 atoms.

- Molecule 1 is a protein called Orotate phosphoribosyltransferase.

Mol	Chain	Residues	Atoms					ZeroOcc	AltConf	Trace
			Total	C	N	O	S			
1	A	205	1626	1034	278	309	5	0	3	0
1	B	175	1377	884	229	258	6	0	1	0
1	C	193	1546	988	261	291	6	0	3	0
1	D	170	1330	855	222	248	5	0	0	0
1	E	205	1626	1037	275	309	5	0	3	0
1	F	177	1391	893	232	261	5	0	1	0
1	G	194	1554	991	268	290	5	0	3	0
1	H	169	1335	860	220	250	5	0	1	0

There are 200 discrepancies between the modelled and reference sequences:

Chain	Residue	Modelled	Actual	Comment	Reference
A	-23	MET	-	expression tag	UNP Q9KVD5
A	-22	HIS	-	expression tag	UNP Q9KVD5
A	-21	HIS	-	expression tag	UNP Q9KVD5
A	-20	HIS	-	expression tag	UNP Q9KVD5
A	-19	HIS	-	expression tag	UNP Q9KVD5
A	-18	HIS	-	expression tag	UNP Q9KVD5
A	-17	HIS	-	expression tag	UNP Q9KVD5
A	-16	SER	-	expression tag	UNP Q9KVD5
A	-15	SER	-	expression tag	UNP Q9KVD5
A	-14	GLY	-	expression tag	UNP Q9KVD5
A	-13	VAL	-	expression tag	UNP Q9KVD5
A	-12	ASP	-	expression tag	UNP Q9KVD5
A	-11	LEU	-	expression tag	UNP Q9KVD5

Continued on next page...

Continued from previous page...

Chain	Residue	Modelled	Actual	Comment	Reference
A	-10	GLY	-	expression tag	UNP Q9KVD5
A	-9	THR	-	expression tag	UNP Q9KVD5
A	-8	GLU	-	expression tag	UNP Q9KVD5
A	-7	ASN	-	expression tag	UNP Q9KVD5
A	-6	LEU	-	expression tag	UNP Q9KVD5
A	-5	TYR	-	expression tag	UNP Q9KVD5
A	-4	PHE	-	expression tag	UNP Q9KVD5
A	-3	GLN	-	expression tag	UNP Q9KVD5
A	-2	SER	-	expression tag	UNP Q9KVD5
A	-1	ASN	-	expression tag	UNP Q9KVD5
A	0	ALA	-	expression tag	UNP Q9KVD5
A	1	MET	-	expression tag	UNP Q9KVD5
B	-23	MET	-	expression tag	UNP Q9KVD5
B	-22	HIS	-	expression tag	UNP Q9KVD5
B	-21	HIS	-	expression tag	UNP Q9KVD5
B	-20	HIS	-	expression tag	UNP Q9KVD5
B	-19	HIS	-	expression tag	UNP Q9KVD5
B	-18	HIS	-	expression tag	UNP Q9KVD5
B	-17	HIS	-	expression tag	UNP Q9KVD5
B	-16	SER	-	expression tag	UNP Q9KVD5
B	-15	SER	-	expression tag	UNP Q9KVD5
B	-14	GLY	-	expression tag	UNP Q9KVD5
B	-13	VAL	-	expression tag	UNP Q9KVD5
B	-12	ASP	-	expression tag	UNP Q9KVD5
B	-11	LEU	-	expression tag	UNP Q9KVD5
B	-10	GLY	-	expression tag	UNP Q9KVD5
B	-9	THR	-	expression tag	UNP Q9KVD5
B	-8	GLU	-	expression tag	UNP Q9KVD5
B	-7	ASN	-	expression tag	UNP Q9KVD5
B	-6	LEU	-	expression tag	UNP Q9KVD5
B	-5	TYR	-	expression tag	UNP Q9KVD5
B	-4	PHE	-	expression tag	UNP Q9KVD5
B	-3	GLN	-	expression tag	UNP Q9KVD5
B	-2	SER	-	expression tag	UNP Q9KVD5
B	-1	ASN	-	expression tag	UNP Q9KVD5
B	0	ALA	-	expression tag	UNP Q9KVD5
B	1	MET	-	expression tag	UNP Q9KVD5
C	-23	MET	-	expression tag	UNP Q9KVD5
C	-22	HIS	-	expression tag	UNP Q9KVD5
C	-21	HIS	-	expression tag	UNP Q9KVD5
C	-20	HIS	-	expression tag	UNP Q9KVD5
C	-19	HIS	-	expression tag	UNP Q9KVD5

Continued on next page...

Continued from previous page...

Chain	Residue	Modelled	Actual	Comment	Reference
C	-18	HIS	-	expression tag	UNP Q9KVD5
C	-17	HIS	-	expression tag	UNP Q9KVD5
C	-16	SER	-	expression tag	UNP Q9KVD5
C	-15	SER	-	expression tag	UNP Q9KVD5
C	-14	GLY	-	expression tag	UNP Q9KVD5
C	-13	VAL	-	expression tag	UNP Q9KVD5
C	-12	ASP	-	expression tag	UNP Q9KVD5
C	-11	LEU	-	expression tag	UNP Q9KVD5
C	-10	GLY	-	expression tag	UNP Q9KVD5
C	-9	THR	-	expression tag	UNP Q9KVD5
C	-8	GLU	-	expression tag	UNP Q9KVD5
C	-7	ASN	-	expression tag	UNP Q9KVD5
C	-6	LEU	-	expression tag	UNP Q9KVD5
C	-5	TYR	-	expression tag	UNP Q9KVD5
C	-4	PHE	-	expression tag	UNP Q9KVD5
C	-3	GLN	-	expression tag	UNP Q9KVD5
C	-2	SER	-	expression tag	UNP Q9KVD5
C	-1	ASN	-	expression tag	UNP Q9KVD5
C	0	ALA	-	expression tag	UNP Q9KVD5
C	1	MET	-	expression tag	UNP Q9KVD5
D	-23	MET	-	expression tag	UNP Q9KVD5
D	-22	HIS	-	expression tag	UNP Q9KVD5
D	-21	HIS	-	expression tag	UNP Q9KVD5
D	-20	HIS	-	expression tag	UNP Q9KVD5
D	-19	HIS	-	expression tag	UNP Q9KVD5
D	-18	HIS	-	expression tag	UNP Q9KVD5
D	-17	HIS	-	expression tag	UNP Q9KVD5
D	-16	SER	-	expression tag	UNP Q9KVD5
D	-15	SER	-	expression tag	UNP Q9KVD5
D	-14	GLY	-	expression tag	UNP Q9KVD5
D	-13	VAL	-	expression tag	UNP Q9KVD5
D	-12	ASP	-	expression tag	UNP Q9KVD5
D	-11	LEU	-	expression tag	UNP Q9KVD5
D	-10	GLY	-	expression tag	UNP Q9KVD5
D	-9	THR	-	expression tag	UNP Q9KVD5
D	-8	GLU	-	expression tag	UNP Q9KVD5
D	-7	ASN	-	expression tag	UNP Q9KVD5
D	-6	LEU	-	expression tag	UNP Q9KVD5
D	-5	TYR	-	expression tag	UNP Q9KVD5
D	-4	PHE	-	expression tag	UNP Q9KVD5
D	-3	GLN	-	expression tag	UNP Q9KVD5
D	-2	SER	-	expression tag	UNP Q9KVD5

Continued on next page...

Continued from previous page...

Chain	Residue	Modelled	Actual	Comment	Reference
D	-1	ASN	-	expression tag	UNP Q9KVD5
D	0	ALA	-	expression tag	UNP Q9KVD5
D	1	MET	-	expression tag	UNP Q9KVD5
E	-23	MET	-	expression tag	UNP Q9KVD5
E	-22	HIS	-	expression tag	UNP Q9KVD5
E	-21	HIS	-	expression tag	UNP Q9KVD5
E	-20	HIS	-	expression tag	UNP Q9KVD5
E	-19	HIS	-	expression tag	UNP Q9KVD5
E	-18	HIS	-	expression tag	UNP Q9KVD5
E	-17	HIS	-	expression tag	UNP Q9KVD5
E	-16	SER	-	expression tag	UNP Q9KVD5
E	-15	SER	-	expression tag	UNP Q9KVD5
E	-14	GLY	-	expression tag	UNP Q9KVD5
E	-13	VAL	-	expression tag	UNP Q9KVD5
E	-12	ASP	-	expression tag	UNP Q9KVD5
E	-11	LEU	-	expression tag	UNP Q9KVD5
E	-10	GLY	-	expression tag	UNP Q9KVD5
E	-9	THR	-	expression tag	UNP Q9KVD5
E	-8	GLU	-	expression tag	UNP Q9KVD5
E	-7	ASN	-	expression tag	UNP Q9KVD5
E	-6	LEU	-	expression tag	UNP Q9KVD5
E	-5	TYR	-	expression tag	UNP Q9KVD5
E	-4	PHE	-	expression tag	UNP Q9KVD5
E	-3	GLN	-	expression tag	UNP Q9KVD5
E	-2	SER	-	expression tag	UNP Q9KVD5
E	-1	ASN	-	expression tag	UNP Q9KVD5
E	0	ALA	-	expression tag	UNP Q9KVD5
E	1	MET	-	expression tag	UNP Q9KVD5
F	-23	MET	-	expression tag	UNP Q9KVD5
F	-22	HIS	-	expression tag	UNP Q9KVD5
F	-21	HIS	-	expression tag	UNP Q9KVD5
F	-20	HIS	-	expression tag	UNP Q9KVD5
F	-19	HIS	-	expression tag	UNP Q9KVD5
F	-18	HIS	-	expression tag	UNP Q9KVD5
F	-17	HIS	-	expression tag	UNP Q9KVD5
F	-16	SER	-	expression tag	UNP Q9KVD5
F	-15	SER	-	expression tag	UNP Q9KVD5
F	-14	GLY	-	expression tag	UNP Q9KVD5
F	-13	VAL	-	expression tag	UNP Q9KVD5
F	-12	ASP	-	expression tag	UNP Q9KVD5
F	-11	LEU	-	expression tag	UNP Q9KVD5
F	-10	GLY	-	expression tag	UNP Q9KVD5

Continued on next page...

Continued from previous page...

Chain	Residue	Modelled	Actual	Comment	Reference
F	-9	THR	-	expression tag	UNP Q9KVD5
F	-8	GLU	-	expression tag	UNP Q9KVD5
F	-7	ASN	-	expression tag	UNP Q9KVD5
F	-6	LEU	-	expression tag	UNP Q9KVD5
F	-5	TYR	-	expression tag	UNP Q9KVD5
F	-4	PHE	-	expression tag	UNP Q9KVD5
F	-3	GLN	-	expression tag	UNP Q9KVD5
F	-2	SER	-	expression tag	UNP Q9KVD5
F	-1	ASN	-	expression tag	UNP Q9KVD5
F	0	ALA	-	expression tag	UNP Q9KVD5
F	1	MET	-	expression tag	UNP Q9KVD5
G	-23	MET	-	expression tag	UNP Q9KVD5
G	-22	HIS	-	expression tag	UNP Q9KVD5
G	-21	HIS	-	expression tag	UNP Q9KVD5
G	-20	HIS	-	expression tag	UNP Q9KVD5
G	-19	HIS	-	expression tag	UNP Q9KVD5
G	-18	HIS	-	expression tag	UNP Q9KVD5
G	-17	HIS	-	expression tag	UNP Q9KVD5
G	-16	SER	-	expression tag	UNP Q9KVD5
G	-15	SER	-	expression tag	UNP Q9KVD5
G	-14	GLY	-	expression tag	UNP Q9KVD5
G	-13	VAL	-	expression tag	UNP Q9KVD5
G	-12	ASP	-	expression tag	UNP Q9KVD5
G	-11	LEU	-	expression tag	UNP Q9KVD5
G	-10	GLY	-	expression tag	UNP Q9KVD5
G	-9	THR	-	expression tag	UNP Q9KVD5
G	-8	GLU	-	expression tag	UNP Q9KVD5
G	-7	ASN	-	expression tag	UNP Q9KVD5
G	-6	LEU	-	expression tag	UNP Q9KVD5
G	-5	TYR	-	expression tag	UNP Q9KVD5
G	-4	PHE	-	expression tag	UNP Q9KVD5
G	-3	GLN	-	expression tag	UNP Q9KVD5
G	-2	SER	-	expression tag	UNP Q9KVD5
G	-1	ASN	-	expression tag	UNP Q9KVD5
G	0	ALA	-	expression tag	UNP Q9KVD5
G	1	MET	-	expression tag	UNP Q9KVD5
H	-23	MET	-	expression tag	UNP Q9KVD5
H	-22	HIS	-	expression tag	UNP Q9KVD5
H	-21	HIS	-	expression tag	UNP Q9KVD5
H	-20	HIS	-	expression tag	UNP Q9KVD5
H	-19	HIS	-	expression tag	UNP Q9KVD5
H	-18	HIS	-	expression tag	UNP Q9KVD5

Continued on next page...

Continued from previous page...

Chain	Residue	Modelled	Actual	Comment	Reference
H	-17	HIS	-	expression tag	UNP Q9KVD5
H	-16	SER	-	expression tag	UNP Q9KVD5
H	-15	SER	-	expression tag	UNP Q9KVD5
H	-14	GLY	-	expression tag	UNP Q9KVD5
H	-13	VAL	-	expression tag	UNP Q9KVD5
H	-12	ASP	-	expression tag	UNP Q9KVD5
H	-11	LEU	-	expression tag	UNP Q9KVD5
H	-10	GLY	-	expression tag	UNP Q9KVD5
H	-9	THR	-	expression tag	UNP Q9KVD5
H	-8	GLU	-	expression tag	UNP Q9KVD5
H	-7	ASN	-	expression tag	UNP Q9KVD5
H	-6	LEU	-	expression tag	UNP Q9KVD5
H	-5	TYR	-	expression tag	UNP Q9KVD5
H	-4	PHE	-	expression tag	UNP Q9KVD5
H	-3	GLN	-	expression tag	UNP Q9KVD5
H	-2	SER	-	expression tag	UNP Q9KVD5
H	-1	ASN	-	expression tag	UNP Q9KVD5
H	0	ALA	-	expression tag	UNP Q9KVD5
H	1	MET	-	expression tag	UNP Q9KVD5

- Molecule 2 is CHLORIDE ION (three-letter code: CL) (formula: Cl).

Mol	Chain	Residues	Atoms		ZeroOcc	AltConf
			Total	Cl		
2	A	1	1	1	0	0
			Total	Cl		
2	H	2	2	2	0	0

- Molecule 3 is water.

Mol	Chain	Residues	Atoms		ZeroOcc	AltConf
			Total	O		
3	A	95	96	96	0	1
			Total	O		
3	B	82	83	83	0	2
			Total	O		
3	C	78	79	79	0	1
			Total	O		
3	D	71	74	74	0	3
			Total	O		
3	E	100	101	101	0	3
			Total	O		
3	F	68	69	69	0	1

Continued on next page...

Continued from previous page...

Mol	Chain	Residues	Atoms		ZeroOcc	AltConf
			Total	O		
3	G	74	74	74	0	1
			Total	O		
3	H	71	72	72	0	1

3 Residue-property plots (i)

These plots are drawn for all protein, RNA, DNA and oligosaccharide chains in the entry. The first graphic for a chain summarises the proportions of the various outlier classes displayed in the second graphic. The second graphic shows the sequence view annotated by issues in geometry and electron density. Residues are color-coded according to the number of geometric quality criteria for which they contain at least one outlier: green = 0, yellow = 1, orange = 2 and red = 3 or more. A red dot above a residue indicates a poor fit to the electron density (RSRZ > 2). Stretches of 2 or more consecutive residues without any outlier are shown as a green connector. Residues present in the sample, but not in the model, are shown in grey.

• Molecule 1: Orotate phosphoribosyltransferase

Chain A:

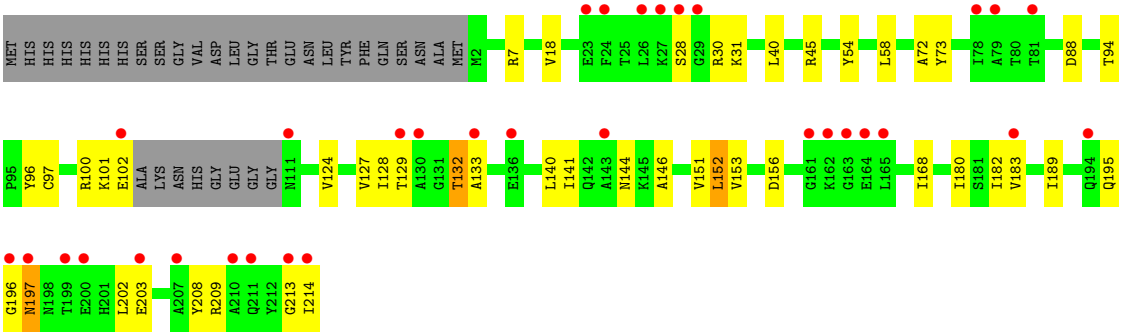

• Molecule 1: Orotate phosphoribosyltransferase

Chain B:

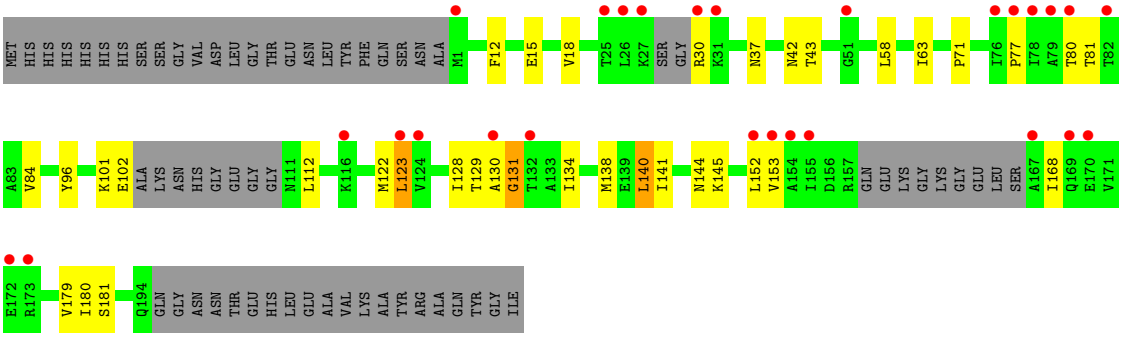

• Molecule 1: Orotate phosphoribosyltransferase

Chain C:

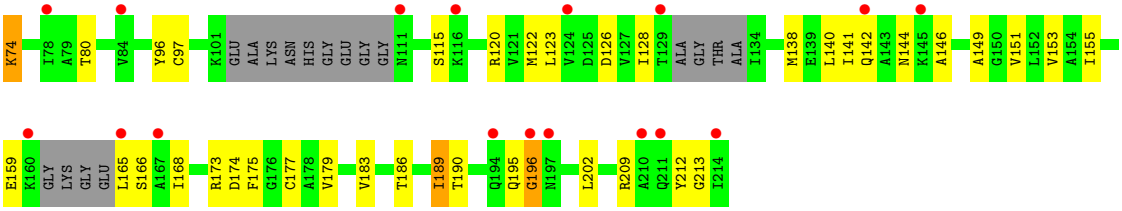

• Molecule 1: Orotate phosphoribosyltransferase

Chain D:

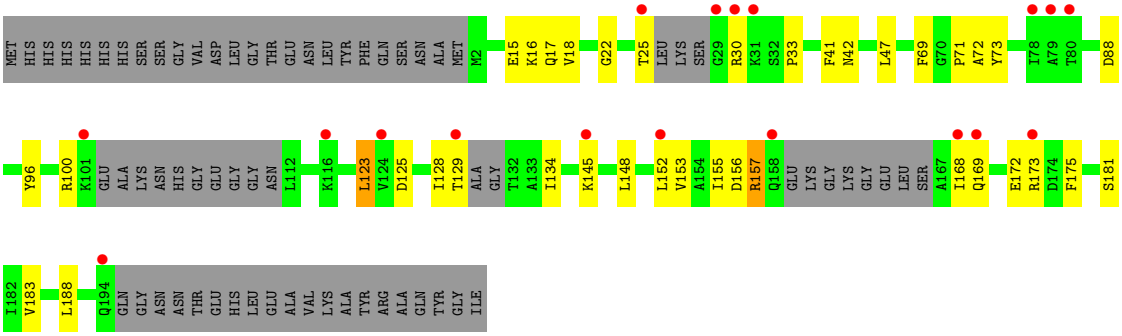

• Molecule 1: Orotate phosphoribosyltransferase

Chain E:

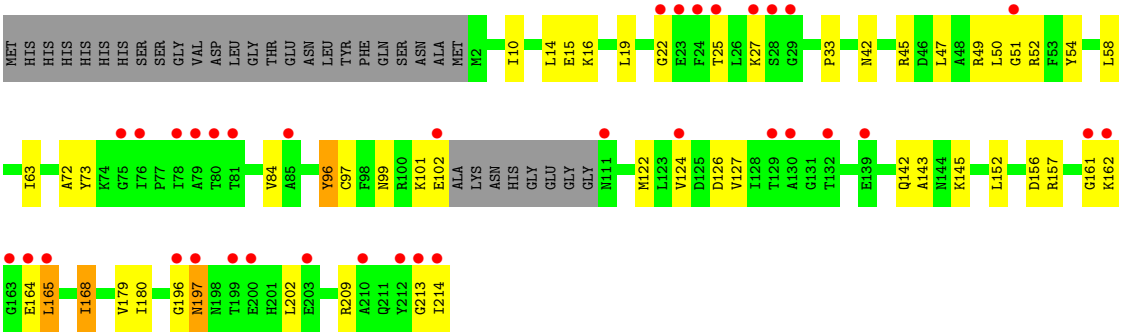

• Molecule 1: Orotate phosphoribosyltransferase

Chain F:

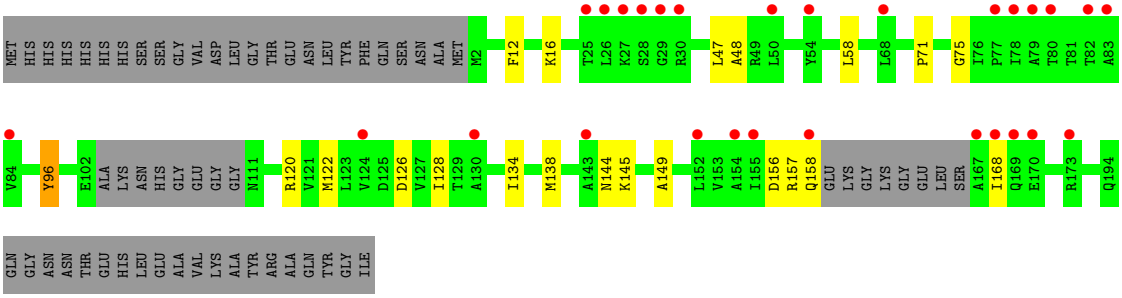

• Molecule 1: Orotate phosphoribosyltransferase

Chain G:

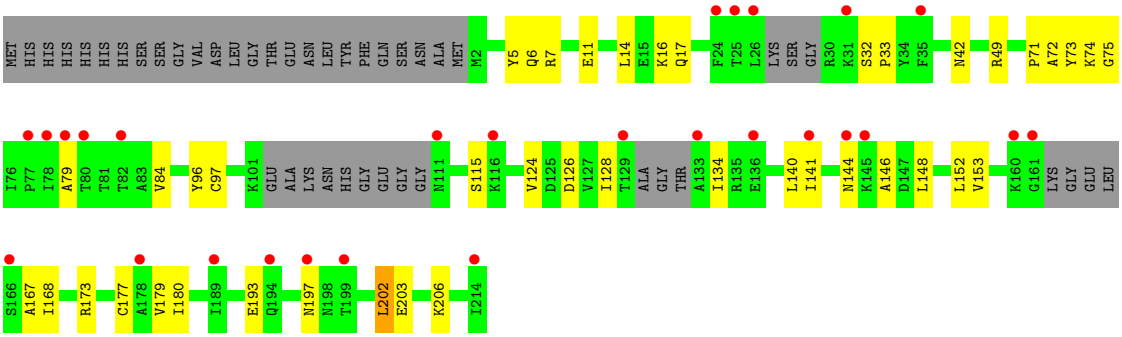

- Molecule 1: Orotate phosphoribosyltransferase

Chain H:

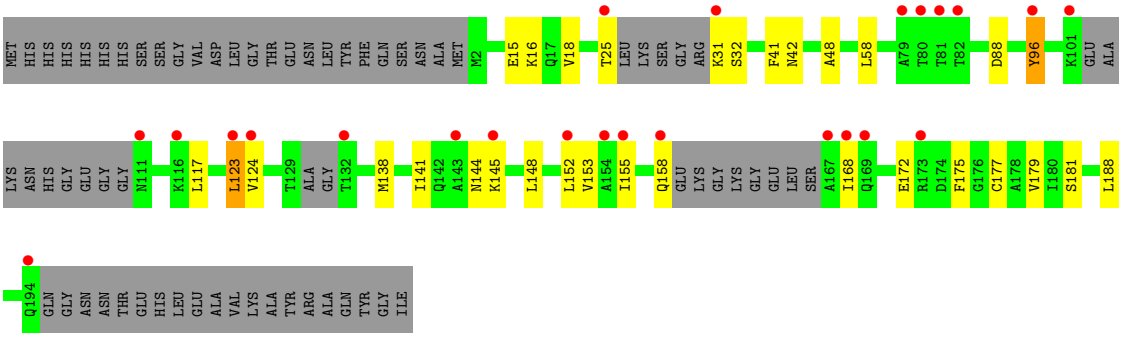

4 Data and refinement statistics (i)

Property	Value	Source
Space group	P 1 21 1	Depositor
Cell constants a, b, c, α, β, γ	96.59Å 76.71Å 133.94Å 90.00° 92.63° 90.00°	Depositor
Resolution (Å)	30.00 – 2.10 29.66 – 2.10	Depositor EDS
% Data completeness (in resolution range)	99.5 (30.00-2.10) 99.5 (29.66-2.10)	Depositor EDS
R_{merge}	0.08	Depositor
R_{sym}	(Not available)	Depositor
$< I/\sigma(I) >$ [1]	2.99 (at 2.10Å)	Xtriage
Refinement program	REFMAC 5.5.0102	Depositor
R, R_{free}	0.222 , 0.269 0.258 , 0.299	Depositor DCC
R_{free} test set	5712 reflections (5.01%)	wwPDB-VP
Wilson B-factor (Å^2)	32.2	Xtriage
Anisotropy	0.573	Xtriage
Bulk solvent k_{sol}(e/Å^3), B_{sol}(Å^2)	0.35 , 46.5	EDS
L-test for twinning[2]	$< \|L\| > = 0.49$, $< L^2 > = 0.32$	Xtriage
Estimated twinning fraction	0.052 for h,-k,-l	Xtriage
F_o,F_c correlation	0.95	EDS
Total number of atoms	12436	wwPDB-VP
Average B, all atoms (Å^2)	44.0	wwPDB-VP

Xtriage's analysis on translational NCS is as follows: *The analyses of the Patterson function reveals a significant off-origin peak that is 89.09 % of the origin peak, indicating pseudo-translational symmetry. The chance of finding a peak of this or larger height randomly in a structure without pseudo-translational symmetry is equal to 3.8806e-08. The detected translational NCS is most likely also responsible for the elevated intensity ratio.*

[1]Intensities estimated from amplitudes.

[2]Theoretical values of $< |L| >$, $< L^2 >$ for acentric reflections are 0.5, 0.333 respectively for untwinned datasets, and 0.375, 0.2 for perfectly twinned datasets.

5 Model quality (i)

5.1 Standard geometry (i)

Bond lengths and bond angles in the following residue types are not validated in this section: CL

The Z score for a bond length (or angle) is the number of standard deviations the observed value is removed from the expected value. A bond length (or angle) with $|Z| > 5$ is considered an outlier worth inspection. RMSZ is the root-mean-square of all Z scores of the bond lengths (or angles).

Mol	Chain	Bond lengths		Bond angles	
		RMSZ	$\#\|Z\|>5$	RMSZ	$\#\|Z\|>5$
1	A	0.79	1/1651 (0.1%)	0.90	2/2222 (0.1%)
1	B	0.72	0/1397	0.81	1/1882 (0.1%)
1	C	0.67	0/1568	0.78	2/2109 (0.1%)
1	D	0.71	1/1349 (0.1%)	0.84	2/1817 (0.1%)
1	E	0.77	2/1652 (0.1%)	0.85	4/2224 (0.2%)
1	F	0.71	0/1413	0.81	2/1906 (0.1%)
1	G	0.69	1/1576 (0.1%)	0.77	2/2118 (0.1%)
1	H	0.68	0/1355	0.79	3/1827 (0.2%)
All	All	0.72	5/11961 (0.0%)	0.82	18/16105 (0.1%)

All (5) bond length outliers are listed below:

Mol	Chain	Res	Type	Atoms	Z	Observed(Å)	Ideal(Å)
1	E	97	CYS	CB-SG	-7.74	1.69	1.82
1	A	97	CYS	CB-SG	-7.16	1.70	1.82
1	D	15	GLU	CG-CD	6.38	1.61	1.51
1	G	97	CYS	CB-SG	-5.15	1.73	1.81
1	E	51	GLY	N-CA	-5.02	1.38	1.46

The worst 5 of 18 bond angle outliers are listed below:

Mol	Chain	Res	Type	Atoms	Z	Observed(^{o})	Ideal(^{o})
1	E	164	GLU	CB-CA-C	-9.68	91.04	110.40
1	A	88	ASP	CB-CG-OD2	-9.63	109.63	118.30
1	A	88	ASP	CB-CG-OD1	8.40	125.86	118.30
1	F	126	ASP	CB-CG-OD1	6.70	124.33	118.30
1	E	164	GLU	N-CA-C	6.33	128.10	111.00

There are no chirality outliers.

There are no planarity outliers.

5.2 Too-close contacts (i)

In the following table, the Non-H and H(model) columns list the number of non-hydrogen atoms and hydrogen atoms in the chain respectively. The H(added) column lists the number of hydrogen atoms added and optimized by MolProbity. The Clashes column lists the number of clashes within the asymmetric unit, whereas Symm-Clashes lists symmetry-related clashes.

Mol	Chain	Non-H	H(model)	H(added)	Clashes	Symm-Clashes
1	A	1626	0	1623	40	0
1	B	1377	0	1383	25	0
1	C	1546	0	1540	41	0
1	D	1330	0	1332	23	0
1	E	1626	0	1619	36	0
1	F	1391	0	1391	15	0
1	G	1554	0	1552	32	0
1	H	1335	0	1330	24	0
2	A	1	0	0	1	0
2	H	2	0	0	0	0
3	A	96	0	0	4	0
3	B	83	0	0	0	0
3	C	79	0	0	1	0
3	D	74	0	0	0	0
3	E	101	0	0	1	0
3	F	69	0	0	0	0
3	G	74	0	0	1	0
3	H	72	0	0	1	0
All	All	12436	0	11770	218	0

The all-atom clashscore is defined as the number of clashes found per 1000 atoms (including hydrogen atoms). The all-atom clashscore for this structure is 9.

The worst 5 of 218 close contacts within the same asymmetric unit are listed below, sorted by their clash magnitude.

Atom-1	Atom-2	Interatomic distance (Å)	Clash overlap (Å)
1:C:69:PHE:HD1	1:C:97[B]:CYS:HG	0.96	0.90
1:C:69:PHE:HD1	1:C:97[B]:CYS:SG	1.99	0.85
1:E:15:GLU:OE1	1:E:16:LYS:HE2	1.80	0.81
1:G:140:LEU:O	1:G:144:ASN:ND2	2.21	0.73
1:E:84:VAL:HG13	1:F:48:ALA:HB2	1.76	0.67

There are no symmetry-related clashes.

5.3 Torsion angles (i)

5.3.1 Protein backbone (i)

In the following table, the Percentiles column shows the percent Ramachandran outliers of the chain as a percentile score with respect to all X-ray entries followed by that with respect to entries of similar resolution.

The Analysed column shows the number of residues for which the backbone conformation was analysed, and the total number of residues.

Mol	Chain	Analysed	Favoured	Allowed	Outliers	Percentiles	
1	A	204/238 (86%)	197 (97%)	5 (2%)	2 (1%)	15	11
1	B	168/238 (71%)	164 (98%)	3 (2%)	1 (1%)	25	21
1	C	186/238 (78%)	182 (98%)	2 (1%)	2 (1%)	14	9
1	D	160/238 (67%)	157 (98%)	3 (2%)	0	100	100
1	E	204/238 (86%)	196 (96%)	7 (3%)	1 (0%)	29	26
1	F	172/238 (72%)	171 (99%)	1 (1%)	0	100	100
1	G	187/238 (79%)	185 (99%)	1 (0%)	1 (0%)	29	26
1	H	160/238 (67%)	159 (99%)	1 (1%)	0	100	100
All	All	1441/1904 (76%)	1411 (98%)	23 (2%)	7 (0%)	29	26

5 of 7 Ramachandran outliers are listed below:

Mol	Chain	Res	Type
1	A	28	SER
1	C	196	GLY
1	A	197	ASN
1	E	197	ASN
1	G	197	ASN

5.3.2 Protein sidechains (i)

In the following table, the Percentiles column shows the percent sidechain outliers of the chain as a percentile score with respect to all X-ray entries followed by that with respect to entries of similar resolution.

The Analysed column shows the number of residues for which the sidechain conformation was analysed, and the total number of residues.

Mol	Chain	Analysed	Rotameric	Outliers	Percentiles	
1	A	168/191 (88%)	164 (98%)	4 (2%)	49	53

Continued on next page...

Continued from previous page...

Mol	Chain	Analysed	Rotameric	Outliers	Percentiles	
1	B	144/191 (75%)	142 (99%)	2 (1%)	67	73
1	C	162/191 (85%)	156 (96%)	6 (4%)	34	35
1	D	139/191 (73%)	135 (97%)	4 (3%)	42	46
1	E	168/191 (88%)	165 (98%)	3 (2%)	59	65
1	F	145/191 (76%)	142 (98%)	3 (2%)	53	59
1	G	161/191 (84%)	155 (96%)	6 (4%)	34	35
1	H	140/191 (73%)	137 (98%)	3 (2%)	53	59
All	All	1227/1528 (80%)	1196 (98%)	31 (2%)	52	52

5 of 31 residues with a non-rotameric sidechain are listed below:

Mol	Chain	Res	Type
1	D	172	GLU
1	G	202	LEU
1	E	157	ARG
1	H	96[A]	TYR
1	G	96	TYR

Sometimes sidechains can be flipped to improve hydrogen bonding and reduce clashes. 5 of 6 such sidechains are listed below:

Mol	Chain	Res	Type
1	E	195	GLN
1	G	142	GLN
1	G	158	GLN
1	C	211	GLN
1	A	195	GLN

5.3.3 RNA (i)

There are no RNA molecules in this entry.

5.4 Non-standard residues in protein, DNA, RNA chains (i)

There are no non-standard protein/DNA/RNA residues in this entry.

5.5 Carbohydrates (i)

There are no monosaccharides in this entry.

5.6 Ligand geometry (i)

Of 3 ligands modelled in this entry, 3 are monoatomic - leaving 0 for Mogul analysis.

There are no bond length outliers.

There are no bond angle outliers.

There are no chirality outliers.

There are no torsion outliers.

There are no ring outliers.

No monomer is involved in short contacts.

5.7 Other polymers (i)

There are no such residues in this entry.

5.8 Polymer linkage issues (i)

There are no chain breaks in this entry.

6 Fit of model and data (i)

6.1 Protein, DNA and RNA chains (i)

In the following table, the column labelled '#RSRZ> 2' contains the number (and percentage) of RSRZ outliers, followed by percent RSRZ outliers for the chain as percentile scores relative to all X-ray entries and entries of similar resolution. The OWAB column contains the minimum, median, 95th percentile and maximum values of the occupancy-weighted average B-factor per residue. The column labelled 'Q< 0.9' lists the number of (and percentage) of residues with an average occupancy less than 0.9.

Mol	Chain	Analysed	<RSRZ>	#RSRZ>2			OWAB(Å^2)	Q<0.9
1	A	205/238 (86%)	0.86	33 (16%)	1	2	14, 40, 86, 96	0
1	B	175/238 (73%)	0.91	27 (15%)	2	2	15, 38, 70, 86	0
1	C	193/238 (81%)	0.86	25 (12%)	3	4	18, 49, 78, 92	0
1	D	170/238 (71%)	0.82	18 (10%)	6	7	16, 41, 74, 87	0
1	E	205/238 (86%)	0.91	36 (17%)	1	1	19, 41, 84, 95	0
1	F	177/238 (74%)	0.88	28 (15%)	2	2	17, 39, 76, 96	0
1	G	194/238 (81%)	0.85	27 (13%)	2	3	20, 50, 79, 93	0
1	H	169/238 (71%)	0.77	24 (14%)	2	3	19, 41, 66, 84	0
All	All	1488/1904 (78%)	0.86	218 (14%)	2	3	14, 42, 80, 96	0

The worst 5 of 218 RSRZ outliers are listed below:

Mol	Chain	Res	Type	RSRZ
1	D	30	ARG	8.6
1	B	1	MET	8.2
1	F	27	LYS	7.7
1	E	214	ILE	7.6
1	A	162	LYS	7.5

6.2 Non-standard residues in protein, DNA, RNA chains (i)

There are no non-standard protein/DNA/RNA residues in this entry.

6.3 Carbohydrates (i)

There are no monosaccharides in this entry.

6.4 Ligands (i)

In the following table, the Atoms column lists the number of modelled atoms in the group and the number defined in the chemical component dictionary. The B-factors column lists the minimum, median, 95th percentile and maximum values of B factors of atoms in the group. The column labelled 'Q< 0.9' lists the number of atoms with occupancy less than 0.9.

Mol	Type	Chain	Res	Atoms	RSCC	RSR	B-factors(Å^2)	Q<0.9
2	CL	H	215	1/1	0.90	0.10	62,62,62,62	0
2	CL	H	216	1/1	0.92	0.18	61,61,61,61	0
2	CL	A	215	1/1	0.97	0.09	43,43,43,43	0

6.5 Other polymers (i)

There are no such residues in this entry.