Full wwPDB X-ray Structure Validation Report (i)

Nov 16, 2023 – 08:53 AM JST

PDB ID	:	6LE6
Title	:	Structure of LNLPTQGRAR bound FEM1C
Authors	:	Chen, X.; Liao, S.; Xu, C.
Deposited on	:	2019-11-24
Resolution	:	2.33 Å(reported)

This is a Full wwPDB X-ray Structure Validation Report for a publicly released PDB entry.

We welcome your comments at *validation@mail.wwpdb.org*
A user guide is available at
https://www.wwpdb.org/validation/2017/XrayValidationReportHelp
with specific help available everywhere you see the (i) symbol.

The types of validation reports are described at
http://www.wwpdb.org/validation/2017/FAQs#types.

The following versions of software and data (see references (i)) were used in the production of this report:

MolProbity	:	4.02b-467
Mogul	:	1.8.5 (274361), CSD as541be (2020)
Xtriage (Phenix)	:	1.13
EDS	:	2.36
Percentile statistics	:	20191225.v01 (using entries in the PDB archive December 25th 2019)
Refmac	:	5.8.0158
CCP4	:	7.0.044 (Gargrove)
Ideal geometry (proteins)	:	Engh & Huber (2001)
Ideal geometry (DNA, RNA)	:	Parkinson et al. (1996)
Validation Pipeline (wwPDB-VP)	:	2.36

1 Overall quality at a glance (i)

The following experimental techniques were used to determine the structure:
X-RAY DIFFRACTION

The reported resolution of this entry is 2.33 Å.

Percentile scores (ranging between 0-100) for global validation metrics of the entry are shown in the following graphic. The table shows the number of entries on which the scores are based.

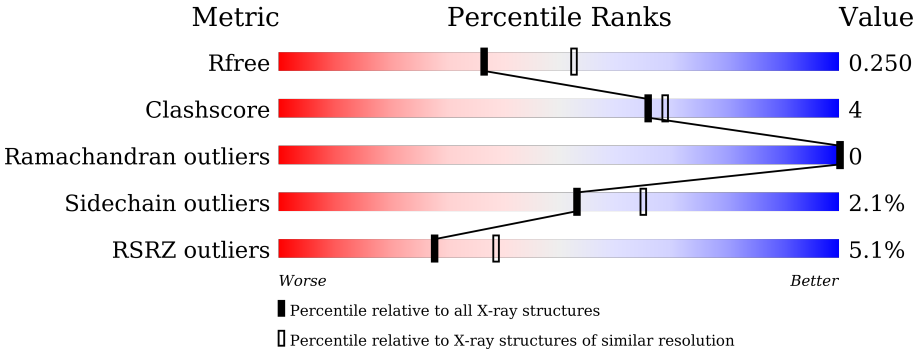

Metric	Whole archive (#Entries)	Similar resolution (#Entries, resolution range(Å))
R_{free}	130704	2096 (2.36-2.32)
Clashscore	141614	2193 (2.36-2.32)
Ramachandran outliers	138981	2159 (2.36-2.32)
Sidechain outliers	138945	2160 (2.36-2.32)
RSRZ outliers	127900	2067 (2.36-2.32)

The table below summarises the geometric issues observed across the polymeric chains and their fit to the electron density. The red, orange, yellow and green segments of the lower bar indicate the fraction of residues that contain outliers for >=3, 2, 1 and 0 types of geometric quality criteria respectively. A grey segment represents the fraction of residues that are not modelled. The numeric value for each fraction is indicated below the corresponding segment, with a dot representing fractions <=5% The upper red bar (where present) indicates the fraction of residues that have poor fit to the electron density. The numeric value is given above the bar.

Mol	Chain	Length	Quality of chain
1	A	418	6% 85% 8% 6%
1	B	418	4% 82% 9% 10%

2 Entry composition (i)

There are 3 unique types of molecules in this entry. The entry contains 5881 atoms, of which 0 are hydrogens and 0 are deuteriums.

In the tables below, the ZeroOcc column contains the number of atoms modelled with zero occupancy, the AltConf column contains the number of residues with at least one atom in alternate conformation and the Trace column contains the number of residues modelled with at most 2 atoms.

- Molecule 1 is a protein called Protein fem-1 homolog C,10-mer peptide.

Mol	Chain	Residues	Atoms					ZeroOcc	AltConf	Trace
			Total	C	N	O	S			
1	A	392	2921	1842	505	552	22	0	0	0
1	B	378	2828	1781	488	538	21	0	1	0

There are 36 discrepancies between the modelled and reference sequences:

Chain	Residue	Modelled	Actual	Comment	Reference
A	-1	GLY	-	expression tag	UNP Q96JP0
A	0	HIS	-	expression tag	UNP Q96JP0
A	391	GLY	-	linker	UNP Q96JP0
A	392	GLY	-	linker	UNP Q96JP0
A	393	GLY	-	linker	UNP Q96JP0
A	394	SER	-	linker	UNP Q96JP0
A	395	GLY	-	linker	UNP Q96JP0
A	396	GLY	-	linker	UNP Q96JP0
A	397	GLY	-	linker	UNP Q96JP0
A	398	SER	-	linker	UNP Q96JP0
A	399	GLY	-	linker	UNP Q96JP0
A	400	GLY	-	linker	UNP Q96JP0
A	401	GLY	-	linker	UNP Q96JP0
A	402	SER	-	linker	UNP Q96JP0
A	403	GLY	-	linker	UNP Q96JP0
A	404	GLY	-	linker	UNP Q96JP0
A	405	GLY	-	linker	UNP Q96JP0
A	406	SER	-	linker	UNP Q96JP0
B	-1	GLY	-	expression tag	UNP Q96JP0
B	0	HIS	-	expression tag	UNP Q96JP0
B	391	GLY	-	linker	UNP Q96JP0
B	392	GLY	-	linker	UNP Q96JP0
B	393	GLY	-	linker	UNP Q96JP0
B	394	SER	-	linker	UNP Q96JP0
B	395	GLY	-	linker	UNP Q96JP0

Continued on next page...

Continued from previous page...

Chain	Residue	Modelled	Actual	Comment	Reference
B	396	GLY	-	linker	UNP Q96JP0
B	397	GLY	-	linker	UNP Q96JP0
B	398	SER	-	linker	UNP Q96JP0
B	399	GLY	-	linker	UNP Q96JP0
B	400	GLY	-	linker	UNP Q96JP0
B	401	GLY	-	linker	UNP Q96JP0
B	402	SER	-	linker	UNP Q96JP0
B	403	GLY	-	linker	UNP Q96JP0
B	404	GLY	-	linker	UNP Q96JP0
B	405	GLY	-	linker	UNP Q96JP0
B	406	SER	-	linker	UNP Q96JP0

- Molecule 2 is SULFATE ION (three-letter code: SO4) (formula: O_4S).

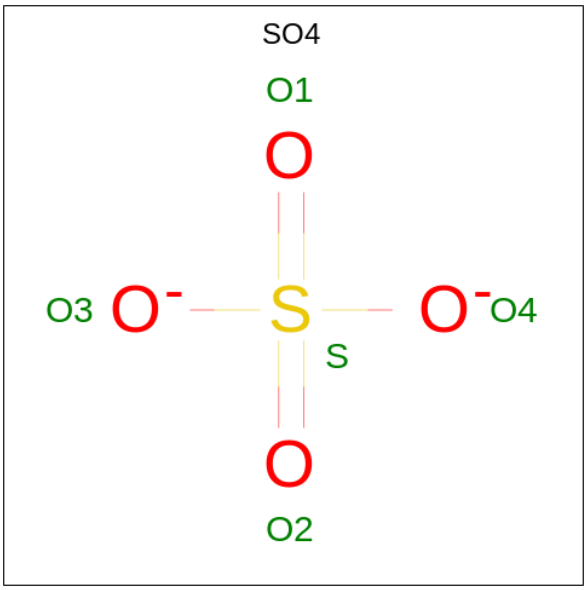

Mol	Chain	Residues	Atoms			ZeroOcc	AltConf
			Total	O	S		
2	A	1	5	4	1	0	0
			Total	O	S		
2	B	1	5	4	1	0	0
			Total	O	S		
2	B	1	5	4	1	0	0

- Molecule 3 is water.

Mol	Chain	Residues	Atoms		ZeroOcc	AltConf
			Total	O		
3	A	71	71	71	0	0

Continued on next page...

Continued from previous page...

Mol	Chain	Residues	Atoms		ZeroOcc	AltConf
			Total	O		
3	B	46	46	46	0	0

3 Residue-property plots (i)

These plots are drawn for all protein, RNA, DNA and oligosaccharide chains in the entry. The first graphic for a chain summarises the proportions of the various outlier classes displayed in the second graphic. The second graphic shows the sequence view annotated by issues in geometry and electron density. Residues are color-coded according to the number of geometric quality criteria for which they contain at least one outlier: green = 0, yellow = 1, orange = 2 and red = 3 or more. A red dot above a residue indicates a poor fit to the electron density (RSRZ > 2). Stretches of 2 or more consecutive residues without any outlier are shown as a green connector. Residues present in the sample, but not in the model, are shown in grey.

• Molecule 1: Protein fem-1 homolog C,10-mer peptide

Chain A:

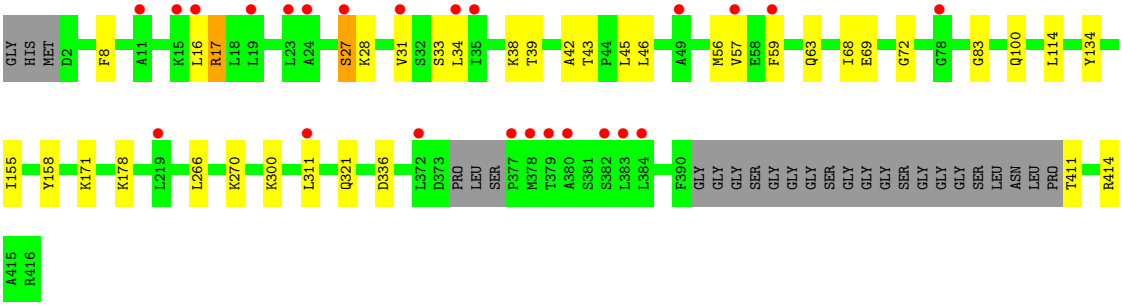

• Molecule 1: Protein fem-1 homolog C,10-mer peptide

Chain B:

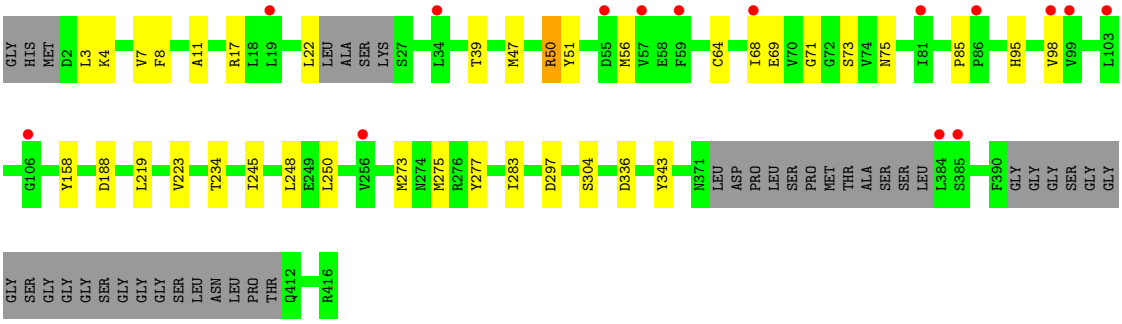

4 Data and refinement statistics (i)

Property	Value	Source
Space group	P 21 21 21	Depositor
Cell constants a, b, c, α, β, γ	94.52Å 96.33Å 146.50Å 90.00° 90.00° 90.00°	Depositor
Resolution (Å)	79.42 – 2.33 79.42 – 2.33	Depositor EDS
% Data completeness (in resolution range)	98.7 (79.42-2.33) 98.7 (79.42-2.33)	Depositor EDS
R_{merge}	(Not available)	Depositor
R_{sym}	(Not available)	Depositor
$< I/\sigma(I) >$ [1]	1.61 (at 2.32Å)	Xtriage
Refinement program	PHENIX 1.14_3260	Depositor
R, R_{free}	0.204 , 0.251 0.204 , 0.250	Depositor DCC
R_{free} test set	2762 reflections (4.84%)	wwPDB-VP
Wilson B-factor (Å^2)	51.1	Xtriage
Anisotropy	0.912	Xtriage
Bulk solvent k_{sol}(e/Å^3), B_{sol}(Å^2)	0.33 , 55.6	EDS
L-test for twinning[2]	$< \|L\| > = 0.49$, $< L^2 > = 0.33$	Xtriage
Estimated twinning fraction	0.011 for k,h,-l	Xtriage
F_o,F_c correlation	0.95	EDS
Total number of atoms	5881	wwPDB-VP
Average B, all atoms (Å^2)	71.0	wwPDB-VP

Xtriage's analysis on translational NCS is as follows: *The largest off-origin peak in the Patterson function is 3.43% of the height of the origin peak. No significant pseudotranslation is detected.*

[1]Intensities estimated from amplitudes.

[2]Theoretical values of $< |L| >$, $< L^2 >$ for acentric reflections are 0.5, 0.333 respectively for untwinned datasets, and 0.375, 0.2 for perfectly twinned datasets.

5 Model quality (i)

5.1 Standard geometry (i)

Bond lengths and bond angles in the following residue types are not validated in this section: SO4

The Z score for a bond length (or angle) is the number of standard deviations the observed value is removed from the expected value. A bond length (or angle) with $|Z| > 5$ is considered an outlier worth inspection. RMSZ is the root-mean-square of all Z scores of the bond lengths (or angles).

Mol	Chain	Bond lengths		Bond angles	
		RMSZ	$\#\|Z\|>5$	RMSZ	$\#\|Z\|>5$
1	A	0.38	0/2971	0.54	0/4021
1	B	0.38	0/2879	0.51	0/3896
All	All	0.38	0/5850	0.52	0/7917

There are no bond length outliers.

There are no bond angle outliers.

There are no chirality outliers.

There are no planarity outliers.

5.2 Too-close contacts (i)

In the following table, the Non-H and H(model) columns list the number of non-hydrogen atoms and hydrogen atoms in the chain respectively. The H(added) column lists the number of hydrogen atoms added and optimized by MolProbity. The Clashes column lists the number of clashes within the asymmetric unit, whereas Symm-Clashes lists symmetry-related clashes.

Mol	Chain	Non-H	H(model)	H(added)	Clashes	Symm-Clashes
1	A	2921	0	2804	22	0
1	B	2828	0	2712	23	0
2	A	5	0	0	0	0
2	B	10	0	0	0	0
3	A	71	0	0	0	0
3	B	46	0	0	0	0
All	All	5881	0	5516	45	0

The all-atom clashscore is defined as the number of clashes found per 1000 atoms (including hydrogen atoms). The all-atom clashscore for this structure is 4.

All (45) close contacts within the same asymmetric unit are listed below, sorted by their clash

magnitude.

Atom-1	Atom-2	Interatomic distance (Å)	Clash overlap (Å)
1:B:273:MET:HE3	1:B:304:SER:N	2.04	0.72
1:A:83:GLY:HA3	1:A:114:LEU:HD13	1.71	0.72
1:B:68:ILE:HG23	1:B:69:GLU:HG2	1.73	0.71
1:A:45:LEU:HD11	1:A:57:VAL:HG23	1.81	0.62
1:A:43:THR:HG23	1:A:46:LEU:H	1.64	0.62
1:B:3:LEU:HD11	1:B:22:LEU:HD22	1.82	0.62
1:A:411:THR:HG21	1:A:414:ARG:HD2	1.84	0.58
1:A:266:LEU:HG	1:A:270:LYS:HE3	1.87	0.56
1:B:22:LEU:HD12	1:B:22:LEU:H	1.73	0.54
1:B:11:ALA:HA	1:B:56:MET:CE	2.39	0.52
1:B:245:ILE:HG13	1:B:275:MET:HE2	1.91	0.52
1:A:17:ARG:HD2	1:A:17:ARG:H	1.75	0.51
1:A:59:PHE:O	1:A:63:GLN:HG2	2.10	0.51
1:B:95:HIS:HB2	1:B:98:VAL:HG12	1.93	0.51
1:B:11:ALA:HA	1:B:56:MET:SD	2.52	0.50
1:A:27:SER:OG	1:A:28:LYS:N	2.45	0.50
1:A:16:LEU:HD13	1:A:56:MET:HG3	1.94	0.49
1:A:27:SER:O	1:A:31:VAL:HG13	2.13	0.48
1:B:95:HIS:HB2	1:B:98:VAL:CG1	2.43	0.48
1:B:277:TYR:CD1	1:B:283:ILE:HD12	2.49	0.48
1:A:72:GLY:O	1:A:83:GLY:N	2.48	0.47
1:B:8:PHE:CB	1:B:39:THR:HG21	2.44	0.47
1:A:411:THR:HG23	1:A:414:ARG:HB2	1.97	0.46
1:A:158:TYR:CD2	1:A:414:ARG:HD3	2.51	0.46
1:B:4:LYS:O	1:B:7:VAL:HG12	2.16	0.45
1:B:273:MET:HE3	1:B:304:SER:CA	2.47	0.45
1:A:8:PHE:CB	1:A:39:THR:HG21	2.47	0.44
1:B:234:THR:HG21	1:B:248:LEU:CD1	2.48	0.44
1:A:34:LEU:HD12	1:A:34:LEU:HA	1.58	0.44
1:A:68:ILE:HG23	1:A:69:GLU:HG2	2.00	0.43
1:B:50:ARG:NH2	1:B:75:ASN:O	2.39	0.42
1:B:223:VAL:HG23	1:B:250:LEU:HD21	2.01	0.42
1:A:38:LYS:HA	1:A:42:ALA:O	2.19	0.42
1:B:3:LEU:HA	1:B:3:LEU:HD12	1.77	0.42
1:B:50:ARG:HD2	1:B:51:TYR:CE2	2.55	0.42
1:A:300:LYS:O	1:A:321:GLN:NE2	2.43	0.42
1:B:158:TYR:HB2	1:B:188:ASP:HB3	2.01	0.42
1:B:219:LEU:HD23	1:B:219:LEU:HA	1.87	0.42
1:A:155:ILE:HD12	1:A:155:ILE:HA	1.93	0.42
1:B:47:MET:HG3	1:B:51:TYR:CE2	2.55	0.41
1:B:3:LEU:HD11	1:B:22:LEU:CD2	2.50	0.41

Continued on next page...

Continued from previous page...

Atom-1	Atom-2	Interatomic distance (Å)	Clash overlap (Å)
1:B:71:GLY:HA2	1:B:85:PRO:HA	2.02	0.41
1:A:171:LYS:HA	1:A:171:LYS:HD3	1.85	0.40
1:A:100:GLN:HG2	1:A:134:TYR:CZ	2.57	0.40
1:A:311:LEU:HD23	1:A:311:LEU:HA	1.89	0.40

There are no symmetry-related clashes.

5.3 Torsion angles (i)

5.3.1 Protein backbone (i)

In the following table, the Percentiles column shows the percent Ramachandran outliers of the chain as a percentile score with respect to all X-ray entries followed by that with respect to entries of similar resolution.

The Analysed column shows the number of residues for which the backbone conformation was analysed, and the total number of residues.

Mol	Chain	Analysed	Favoured	Allowed	Outliers	Percentiles	
1	A	386/418 (92%)	371 (96%)	15 (4%)	0	100	100
1	B	371/418 (89%)	360 (97%)	11 (3%)	0	100	100
All	All	757/836 (91%)	731 (97%)	26 (3%)	0	100	100

There are no Ramachandran outliers to report.

5.3.2 Protein sidechains (i)

In the following table, the Percentiles column shows the percent sidechain outliers of the chain as a percentile score with respect to all X-ray entries followed by that with respect to entries of similar resolution.

The Analysed column shows the number of residues for which the sidechain conformation was analysed, and the total number of residues.

Mol	Chain	Analysed	Rotameric	Outliers	Percentiles	
1	A	287/341 (84%)	282 (98%)	5 (2%)	60	72
1	B	282/341 (83%)	275 (98%)	7 (2%)	47	58
All	All	569/682 (83%)	557 (98%)	12 (2%)	53	65

All (12) residues with a non-rotameric sidechain are listed below:

Mol	Chain	Res	Type
1	A	17	ARG
1	A	27	SER
1	A	33	SER
1	A	178	LYS
1	A	336	ASP
1	B	17	ARG
1	B	50	ARG
1	B	64	CYS
1	B	73	SER
1	B	297	ASP
1	B	336	ASP
1	B	343	TYR

Sometimes sidechains can be flipped to improve hydrogen bonding and reduce clashes. There are no such sidechains identified.

5.3.3 RNA (i)

There are no RNA molecules in this entry.

5.4 Non-standard residues in protein, DNA, RNA chains (i)

There are no non-standard protein/DNA/RNA residues in this entry.

5.5 Carbohydrates (i)

There are no monosaccharides in this entry.

5.6 Ligand geometry (i)

3 ligands are modelled in this entry.

In the following table, the Counts columns list the number of bonds (or angles) for which Mogul statistics could be retrieved, the number of bonds (or angles) that are observed in the model and the number of bonds (or angles) that are defined in the Chemical Component Dictionary. The Link column lists molecule types, if any, to which the group is linked. The Z score for a bond length (or angle) is the number of standard deviations the observed value is removed from the expected value. A bond length (or angle) with $|Z| > 2$ is considered an outlier worth inspection. RMSZ is the root-mean-square of all Z scores of the bond lengths (or angles).

Mol	Type	Chain	Res	Link	Bond lengths			Bond angles		
					Counts	RMSZ	$\#\|Z\| > 2$	Counts	RMSZ	$\#\|Z\| > 2$
2	SO4	A	501	-	4,4,4	0.14	0	6,6,6	0.22	0
2	SO4	B	501	-	4,4,4	0.15	0	6,6,6	0.10	0
2	SO4	B	502	-	4,4,4	0.17	0	6,6,6	0.22	0

There are no bond length outliers.

There are no bond angle outliers.

There are no chirality outliers.

There are no torsion outliers.

There are no ring outliers.

No monomer is involved in short contacts.

5.7 Other polymers (i)

There are no such residues in this entry.

5.8 Polymer linkage issues (i)

There are no chain breaks in this entry.

6 Fit of model and data (i)

6.1 Protein, DNA and RNA chains (i)

In the following table, the column labelled '#RSRZ> 2' contains the number (and percentage) of RSRZ outliers, followed by percent RSRZ outliers for the chain as percentile scores relative to all X-ray entries and entries of similar resolution. The OWAB column contains the minimum, median, 95th percentile and maximum values of the occupancy-weighted average B-factor per residue. The column labelled 'Q< 0.9' lists the number of (and percentage) of residues with an average occupancy less than 0.9.

Mol	Chain	Analysed	<RSRZ>	#RSRZ>2			OWAB(Å^2)	Q<0.9
1	A	392/418 (93%)	0.69	24 (6%)	21	30	40, 63, 128, 175	0
1	B	378/418 (90%)	0.66	15 (3%)	38	49	43, 66, 123, 155	0
All	All	770/836 (92%)	0.67	39 (5%)	28	39	40, 64, 126, 175	0

All (39) RSRZ outliers are listed below:

Mol	Chain	Res	Type	RSRZ
1	A	34	LEU	7.7
1	B	34	LEU	5.5
1	A	382	SER	4.9
1	B	19	LEU	4.3
1	B	59	PHE	3.8
1	A	383	LEU	3.8
1	A	16	LEU	3.7
1	A	31	VAL	3.7
1	A	384	LEU	3.4
1	A	311	LEU	3.3
1	A	380	ALA	3.3
1	A	27	SER	3.3
1	A	59	PHE	3.2
1	A	23	LEU	3.2
1	B	81	ILE	3.1
1	A	11	ALA	3.1
1	B	384	LEU	3.1
1	B	98	VAL	3.0
1	A	24	ALA	3.0
1	A	57	VAL	3.0
1	A	377	PRO	2.8
1	B	99	VAL	2.7
1	A	35	ILE	2.6
1	B	57	VAL	2.6

Continued on next page...

Continued from previous page...

Mol	Chain	Res	Type	RSRZ
1	A	378	MET	2.5
1	A	379	THR	2.5
1	A	78	GLY	2.5
1	B	86	PRO	2.4
1	B	68	ILE	2.4
1	A	15	LYS	2.4
1	B	385	SER	2.3
1	A	219	LEU	2.2
1	B	256	VAL	2.2
1	A	19	LEU	2.2
1	B	55	ASP	2.1
1	B	106	GLY	2.1
1	A	372	LEU	2.0
1	B	103	LEU	2.0
1	A	49	ALA	2.0

6.2 Non-standard residues in protein, DNA, RNA chains (i)

There are no non-standard protein/DNA/RNA residues in this entry.

6.3 Carbohydrates (i)

There are no monosaccharides in this entry.

6.4 Ligands (i)

In the following table, the Atoms column lists the number of modelled atoms in the group and the number defined in the chemical component dictionary. The B-factors column lists the minimum, median, 95th percentile and maximum values of B factors of atoms in the group. The column labelled 'Q< 0.9' lists the number of atoms with occupancy less than 0.9.

Mol	Type	Chain	Res	Atoms	RSCC	RSR	B-factors(Å^2)	Q<0.9
2	SO4	B	501	5/5	0.88	0.18	124,126,127,128	0
2	SO4	A	501	5/5	0.97	0.12	71,73,74,77	0
2	SO4	B	502	5/5	0.99	0.17	64,66,70,72	0

6.5 Other polymers (i)

There are no such residues in this entry.