wwPDB X-ray Structure Validation Summary Report (i)

Jun 23, 2024 – 03:44 AM EDT

PDB ID	:	5K5T
Title	:	Crystal structure of the inactive form of human calcium-sensing receptor extracellular domain
Authors	:	Geng, Y.; Mosyak, L.; Kurinov, I.; Zuo, H.; Sturchler, E.; Cheng, T.C.; Subramanyam, P.; Brown, A.P.; Brennan, S.C.; Mun, H.-C.; Bush, M.; Chen, Y.; Nguyen, T.; Cao, B.; Chang, D.; Quick, M.; Conigrave, A.; Colecraft, H.M.; McDonald, P.; Fan, Q.R.
Deposited on	:	2016-05-23
Resolution	:	3.10 Å(reported)

This is a wwPDB X-ray Structure Validation Summary Report for a publicly released PDB entry.

We welcome your comments at *validation@mail.wwpdb.org*
A user guide is available at
https://www.wwpdb.org/validation/2017/XrayValidationReportHelp
with specific help available everywhere you see the (i) symbol.

The types of validation reports are described at
http://www.wwpdb.org/validation/2017/FAQs#types.

The following versions of software and data (see references (i)) were used in the production of this report:

MolProbity	:	4.02b-467
Mogul	:	1.8.5 (274361), CSD as541be (2020)
Xtriage (Phenix)	:	1.13
EDS	:	2.37.1
Percentile statistics	:	20191225.v01 (using entries in the PDB archive December 25th 2019)
Refmac	:	5.8.0158
CCP4	:	7.0.044 (Gargrove)
Ideal geometry (proteins)	:	Engh & Huber (2001)
Ideal geometry (DNA, RNA)	:	Parkinson et al. (1996)

1 Overall quality at a glance (i)

The following experimental techniques were used to determine the structure:
X-RAY DIFFRACTION

The reported resolution of this entry is 3.10 Å.

Percentile scores (ranging between 0-100) for global validation metrics of the entry are shown in the following graphic. The table shows the number of entries on which the scores are based.

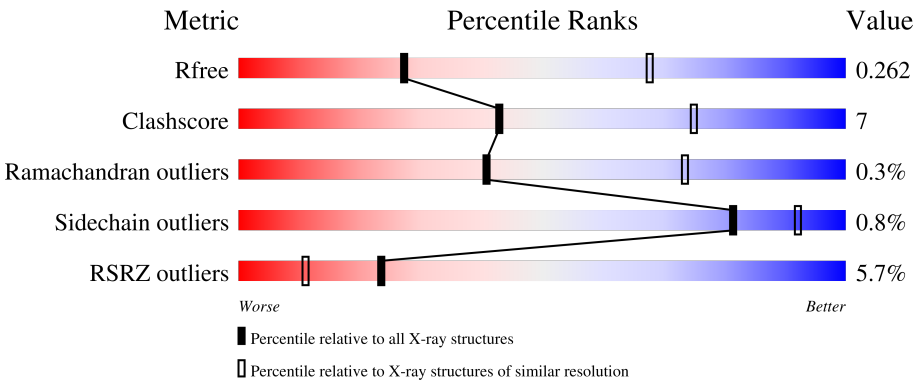

Metric	Whole archive (#Entries)	Similar resolution (#Entries, resolution range(Å))
R_{free}	130704	1094 (3.10-3.10)
Clashscore	141614	1184 (3.10-3.10)
Ramachandran outliers	138981	1141 (3.10-3.10)
Sidechain outliers	138945	1141 (3.10-3.10)
RSRZ outliers	127900	1067 (3.10-3.10)

The table below summarises the geometric issues observed across the polymeric chains and their fit to the electron density. The red, orange, yellow and green segments of the lower bar indicate the fraction of residues that contain outliers for >=3, 2, 1 and 0 types of geometric quality criteria respectively. A grey segment represents the fraction of residues that are not modelled. The numeric value for each fraction is indicated below the corresponding segment, with a dot representing fractions <=5% The upper red bar (where present) indicates the fraction of residues that have poor fit to the electron density. The numeric value is given above the bar.

Mol	Chain	Length	Quality of chain
1	A	615	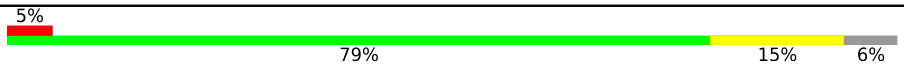

The following table lists non-polymeric compounds, carbohydrate monomers and non-standard residues in protein, DNA, RNA chains that are outliers for geometric or electron-density-fit criteria:

Validation Pipeline (wwPDB-VP) : 2.37.1

Mol	Type	Chain	Res	Chirality	Geometry	Clashes	Electron density
4	NAG	A	709	-	-	-	X

2 Entry composition (i)

There are 5 unique types of molecules in this entry. The entry contains 4721 atoms, of which 0 are hydrogens and 0 are deuteriums.

In the tables below, the ZeroOcc column contains the number of atoms modelled with zero occupancy, the AltConf column contains the number of residues with at least one atom in alternate conformation and the Trace column contains the number of residues modelled with at most 2 atoms.

- Molecule 1 is a protein called Extracellular calcium-sensing receptor.

Mol	Chain	Residues	Atoms					ZeroOcc	AltConf	Trace
			Total	C	N	O	S			
1	A	578	4564	2896	771	875	22	0	0	0

There are 29 discrepancies between the modelled and reference sequences:

Chain	Residue	Modelled	Actual	Comment	Reference
A	1	MET	-	initiating methionine	UNP P41180
A	2	ALA	-	expression tag	UNP P41180
A	3	PHE	-	expression tag	UNP P41180
A	4	TYR	-	expression tag	UNP P41180
A	5	SER	-	expression tag	UNP P41180
A	6	CYS	-	expression tag	UNP P41180
A	7	CYS	-	expression tag	UNP P41180
A	8	TRP	-	expression tag	UNP P41180
A	9	VAL	-	expression tag	UNP P41180
A	10	LEU	-	expression tag	UNP P41180
A	11	LEU	-	expression tag	UNP P41180
A	12	ALA	-	expression tag	UNP P41180
A	13	LEU	-	expression tag	UNP P41180
A	14	THR	-	expression tag	UNP P41180
A	15	TRP	-	expression tag	UNP P41180
A	16	HIS	-	expression tag	UNP P41180
A	17	THR	-	expression tag	UNP P41180
A	18	SER	-	expression tag	UNP P41180
A	19	ALA	-	expression tag	UNP P41180
A	386	GLN	ASN	engineered mutation	UNP P41180
A	402	ASN	SER	engineered mutation	UNP P41180
A	608	ASP	-	expression tag	UNP P41180
A	609	TYR	-	expression tag	UNP P41180
A	610	LYS	-	expression tag	UNP P41180
A	611	ASP	-	expression tag	UNP P41180
A	612	ASP	-	expression tag	UNP P41180
A	613	ASP	-	expression tag	UNP P41180

Continued on next page...

Continued from previous page...

Chain	Residue	Modelled	Actual	Comment	Reference
A	614	ASP	-	expression tag	UNP P41180
A	615	LYS	-	expression tag	UNP P41180

- Molecule 2 is CALCIUM ION (three-letter code: CA) (formula: Ca).

Mol	Chain	Residues	Atoms		ZeroOcc	AltConf
			Total	Ca		
2	A	1	1	1	0	0

- Molecule 3 is SULFATE ION (three-letter code: SO4) (formula: O_4S).

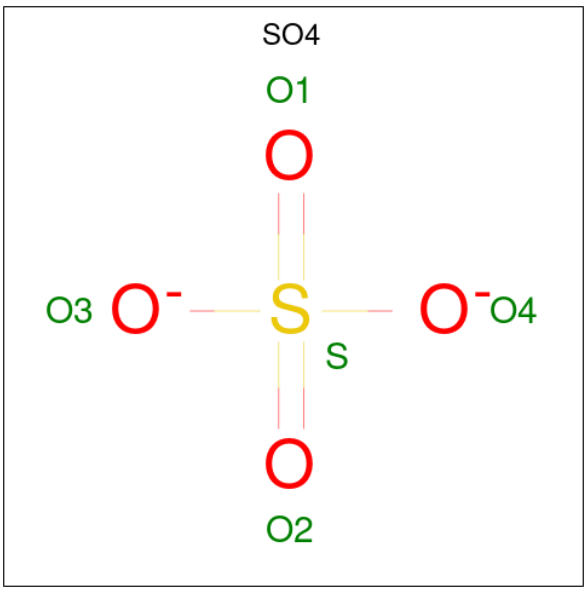

Mol	Chain	Residues	Atoms			ZeroOcc	AltConf
			Total	O	S		
3	A	1	5	4	1	0	0
			Total	O	S		
3	A	1	5	4	1	0	0
			Total	O	S		
3	A	1	5	4	1	0	0

- Molecule 4 is 2-acetamido-2-deoxy-beta-D-glucopyranose (three-letter code: NAG) (formula: $C_8H_{15}NO_6$).

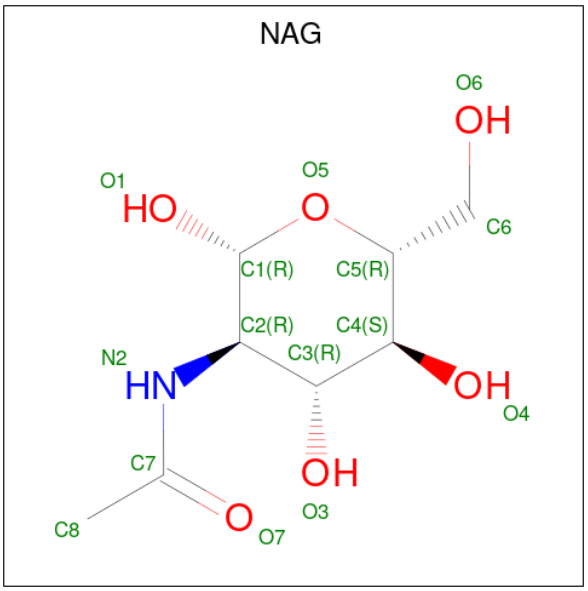

Mol	Chain	Residues	Atoms				ZeroOcc	AltConf
			Total	C	N	O		
4	A	1	14	8	1	5	0	0
			Total	C	N	O		
4	A	1	14	8	1	5	0	0
			Total	C	N	O		
4	A	1	14	8	1	5	0	0
			Total	C	N	O		
4	A	1	14	8	1	5	0	0
			Total	C	N	O		
4	A	1	14	8	1	5	0	0
			Total	C	N	O		
4	A	1	14	8	1	5	0	0
			Total	C	N	O		
4	A	1	14	8	1	5	0	0

- Molecule 5 is water.

Mol	Chain	Residues	Atoms		ZeroOcc	AltConf
			Total	O		
5	A	43	43	43	0	0

3 Residue-property plots (i)

These plots are drawn for all protein, RNA, DNA and oligosaccharide chains in the entry. The first graphic for a chain summarises the proportions of the various outlier classes displayed in the second graphic. The second graphic shows the sequence view annotated by issues in geometry and electron density. Residues are color-coded according to the number of geometric quality criteria for which they contain at least one outlier: green = 0, yellow = 1, orange = 2 and red = 3 or more. A red dot above a residue indicates a poor fit to the electron density (RSRZ > 2). Stretches of 2 or more consecutive residues without any outlier are shown as a green connector. Residues present in the sample, but not in the model, are shown in grey.

• Molecule 1: Extracellular calcium-sensing receptor

Chain A:

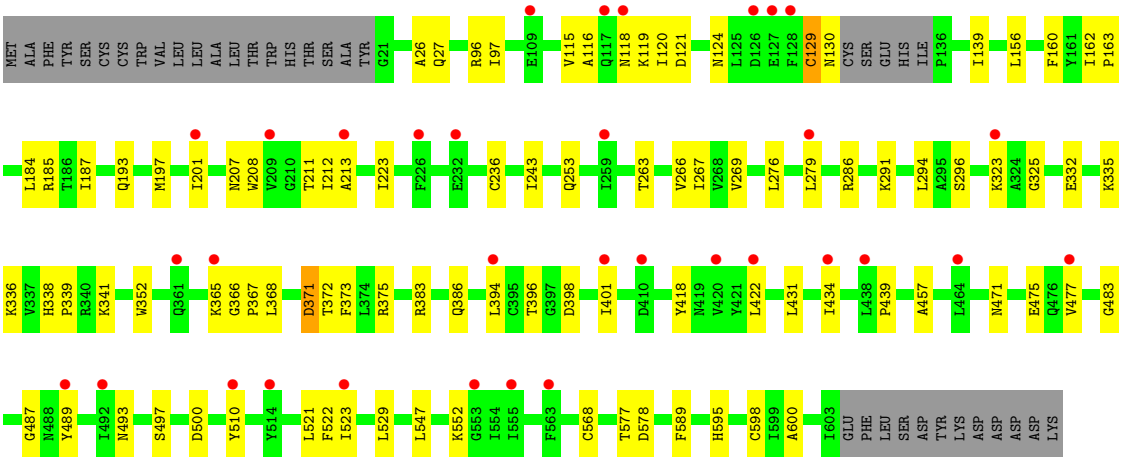

4 Data and refinement statistics (i)

Property	Value	Source
Space group	F 2 2 2	Depositor
Cell constants a, b, c, α, β, γ	126.33Å 150.15Å 214.58Å 90.00° 90.00° 90.00°	Depositor
Resolution (Å)	107.21 – 3.10 107.29 – 3.10	Depositor EDS
% Data completeness (in resolution range)	89.5 (107.21-3.10) 89.5 (107.29-3.10)	Depositor EDS
R_{merge}	(Not available)	Depositor
R_{sym}	(Not available)	Depositor
$< I/\sigma(I) >$ [1]	1.74 (at 3.13Å)	Xtriage
Refinement program	BUSTER 2.10.1	Depositor
R, R_{free}	0.222 , 0.239 0.240 , 0.262	Depositor DCC
R_{free} test set	845 reflections (5.05%)	wwPDB-VP
Wilson B-factor (Å^2)	103.7	Xtriage
Anisotropy	0.011	Xtriage
Bulk solvent k_{sol}(e/Å^3), B_{sol}(Å^2)	0.34 , 87.0	EDS
L-test for twinning[2]	$< \|L\| > = 0.47$, $< L^2 > = 0.29$	Xtriage
Estimated twinning fraction	No twinning to report.	Xtriage
F_o,F_c correlation	0.92	EDS
Total number of atoms	4721	wwPDB-VP
Average B, all atoms (Å^2)	110.0	wwPDB-VP

Xtriage's analysis on translational NCS is as follows: *The largest off-origin peak in the Patterson function is 3.54% of the height of the origin peak. No significant pseudotranslation is detected.*

[1]Intensities estimated from amplitudes.

[2]Theoretical values of $< |L| >$, $< L^2 >$ for acentric reflections are 0.5, 0.333 respectively for untwinned datasets, and 0.375, 0.2 for perfectly twinned datasets.

5 Model quality (i)

5.1 Standard geometry (i)

Bond lengths and bond angles in the following residue types are not validated in this section: SO4, NAG, CA

The Z score for a bond length (or angle) is the number of standard deviations the observed value is removed from the expected value. A bond length (or angle) with $|Z| > 5$ is considered an outlier worth inspection. RMSZ is the root-mean-square of all Z scores of the bond lengths (or angles).

Mol	Chain	Bond lengths		Bond angles	
		RMSZ	$\#\|Z\|>5$	RMSZ	$\#\|Z\|>5$
1	A	0.42	0/4673	0.69	0/6334

There are no bond length outliers.

There are no bond angle outliers.

There are no chirality outliers.

There are no planarity outliers.

5.2 Too-close contacts (i)

In the following table, the Non-H and H(model) columns list the number of non-hydrogen atoms and hydrogen atoms in the chain respectively. The H(added) column lists the number of hydrogen atoms added and optimized by MolProbity. The Clashes column lists the number of clashes within the asymmetric unit, whereas Symm-Clashes lists symmetry-related clashes.

Mol	Chain	Non-H	H(model)	H(added)	Clashes	Symm-Clashes
1	A	4564	0	4377	62	0
2	A	1	0	0	0	0
3	A	15	0	0	0	0
4	A	98	0	91	2	0
5	A	43	0	0	1	0
All	All	4721	0	4468	62	0

The all-atom clashscore is defined as the number of clashes found per 1000 atoms (including hydrogen atoms). The all-atom clashscore for this structure is 7.

The worst 5 of 62 close contacts within the same asymmetric unit are listed below, sorted by their clash magnitude.

Atom-1	Atom-2	Interatomic distance (Å)	Clash overlap (Å)
1:A:365:LYS:HG2	1:A:366:GLY:HA2	1.38	1.06
1:A:116:ALA:HA	1:A:120:ILE:HD12	1.48	0.94
1:A:365:LYS:CG	1:A:366:GLY:HA2	2.01	0.92
1:A:119:LYS:HB2	1:A:160:PHE:CD1	2.20	0.77
1:A:371:ASP:CB	1:A:375:ARG:HG3	2.14	0.77

There are no symmetry-related clashes.

5.3 Torsion angles (i)

5.3.1 Protein backbone (i)

In the following table, the Percentiles column shows the percent Ramachandran outliers of the chain as a percentile score with respect to all X-ray entries followed by that with respect to entries of similar resolution.

The Analysed column shows the number of residues for which the backbone conformation was analysed, and the total number of residues.

Mol	Chain	Analysed	Favoured	Allowed	Outliers	Percentiles
1	A	574/615 (93%)	533 (93%)	39 (7%)	2 (0%)	41 73

All (2) Ramachandran outliers are listed below:

Mol	Chain	Res	Type
1	A	372	THR
1	A	439	PRO

5.3.2 Protein sidechains (i)

In the following table, the Percentiles column shows the percent sidechain outliers of the chain as a percentile score with respect to all X-ray entries followed by that with respect to entries of similar resolution.

The Analysed column shows the number of residues for which the sidechain conformation was analysed, and the total number of residues.

Mol	Chain	Analysed	Rotameric	Outliers	Percentiles
1	A	497/531 (94%)	493 (99%)	4 (1%)	81 92

All (4) residues with a non-rotameric sidechain are listed below:

Mol	Chain	Res	Type
1	A	129	CYS
1	A	236	CYS
1	A	371	ASP
1	A	598	CYS

Sometimes sidechains can be flipped to improve hydrogen bonding and reduce clashes. All (1) such sidechains are listed below:

Mol	Chain	Res	Type
1	A	493	ASN

5.3.3 RNA (i)

There are no RNA molecules in this entry.

5.4 Non-standard residues in protein, DNA, RNA chains (i)

There are no non-standard protein/DNA/RNA residues in this entry.

5.5 Carbohydrates (i)

There are no monosaccharides in this entry.

5.6 Ligand geometry (i)

Of 11 ligands modelled in this entry, 1 is monoatomic - leaving 10 for Mogul analysis.

In the following table, the Counts columns list the number of bonds (or angles) for which Mogul statistics could be retrieved, the number of bonds (or angles) that are observed in the model and the number of bonds (or angles) that are defined in the Chemical Component Dictionary. The Link column lists molecule types, if any, to which the group is linked. The Z score for a bond length (or angle) is the number of standard deviations the observed value is removed from the expected value. A bond length (or angle) with $|Z| > 2$ is considered an outlier worth inspection. RMSZ is the root-mean-square of all Z scores of the bond lengths (or angles).

Mol	Type	Chain	Res	Link	Bond lengths			Bond angles		
					Counts	RMSZ	$\#\|Z\| > 2$	Counts	RMSZ	$\#\|Z\| > 2$
4	NAG	A	706	1	14,14,15	0.40	0	17,19,21	1.24	1 (5%)
4	NAG	A	710	1	14,14,15	0.28	0	17,19,21	0.83	1 (5%)
4	NAG	A	708	1	14,14,15	0.31	0	17,19,21	1.02	2 (11%)
4	NAG	A	707	1	14,14,15	0.26	0	17,19,21	0.46	0

Mol	Type	Chain	Res	Link	Bond lengths			Bond angles		
					Counts	RMSZ	$\#\|Z\| > 2$	Counts	RMSZ	$\#\|Z\| > 2$
3	SO4	A	702	-	4,4,4	0.13	0	6,6,6	0.34	0
3	SO4	A	704	-	4,4,4	0.18	0	6,6,6	0.16	0
4	NAG	A	711	1	14,14,15	0.51	0	17,19,21	1.70	3 (17%)
4	NAG	A	705	1	14,14,15	0.41	0	17,19,21	1.56	4 (23%)
3	SO4	A	703	-	4,4,4	0.17	0	6,6,6	0.16	0
4	NAG	A	709	1	14,14,15	0.26	0	17,19,21	0.46	0

In the following table, the Chirals column lists the number of chiral outliers, the number of chiral centers analysed, the number of these observed in the model and the number defined in the Chemical Component Dictionary. Similar counts are reported in the Torsion and Rings columns. '-' means no outliers of that kind were identified.

Mol	Type	Chain	Res	Link	Chirals	Torsions	Rings
4	NAG	A	706	1	-	2/6/23/26	0/1/1/1
4	NAG	A	710	1	-	2/6/23/26	0/1/1/1
4	NAG	A	708	1	-	1/6/23/26	0/1/1/1
4	NAG	A	707	1	-	0/6/23/26	0/1/1/1
4	NAG	A	711	1	-	1/6/23/26	0/1/1/1
4	NAG	A	705	1	-	3/6/23/26	0/1/1/1
4	NAG	A	709	1	-	2/6/23/26	0/1/1/1

There are no bond length outliers.

The worst 5 of 11 bond angle outliers are listed below:

Mol	Chain	Res	Type	Atoms	Z	Observed(^{o})	Ideal(^{o})
4	A	706	NAG	C1-O5-C5	4.71	118.58	112.19
4	A	711	NAG	O5-C1-C2	-4.32	104.47	111.29
4	A	711	NAG	C1-O5-C5	4.18	117.86	112.19
4	A	705	NAG	C1-O5-C5	4.18	117.86	112.19
4	A	705	NAG	C1-C2-N2	3.44	116.36	110.49

There are no chirality outliers.

5 of 11 torsion outliers are listed below:

Mol	Chain	Res	Type	Atoms
4	A	710	NAG	O5-C5-C6-O6
4	A	709	NAG	C8-C7-N2-C2
4	A	705	NAG	O5-C5-C6-O6
4	A	706	NAG	O5-C5-C6-O6
4	A	709	NAG	O7-C7-N2-C2

There are no ring outliers.

1 monomer is involved in 2 short contacts:

Mol	Chain	Res	Type	Clashes	Symm-Clashes
4	A	709	NAG	2	0

5.7 Other polymers (i)

There are no such residues in this entry.

5.8 Polymer linkage issues (i)

There are no chain breaks in this entry.

6 Fit of model and data (i)

6.1 Protein, DNA and RNA chains (i)

In the following table, the column labelled '#RSRZ> 2' contains the number (and percentage) of RSRZ outliers, followed by percent RSRZ outliers for the chain as percentile scores relative to all X-ray entries and entries of similar resolution. The OWAB column contains the minimum, median, 95th percentile and maximum values of the occupancy-weighted average B-factor per residue. The column labelled 'Q< 0.9' lists the number of (and percentage) of residues with an average occupancy less than 0.9.

Mol	Chain	Analysed	<RSRZ>	#RSRZ>2	OWAB(Å^2)	Q<0.9
1	A	578/615 (93%)	0.69	33 (5%) 23 11	69, 108, 150, 184	0

The worst 5 of 33 RSRZ outliers are listed below:

Mol	Chain	Res	Type	RSRZ
1	A	365	LYS	5.4
1	A	126	ASP	4.5
1	A	438	LEU	3.8
1	A	128	PHE	3.7
1	A	514	TYR	3.1

6.2 Non-standard residues in protein, DNA, RNA chains (i)

There are no non-standard protein/DNA/RNA residues in this entry.

6.3 Carbohydrates (i)

There are no monosaccharides in this entry.

6.4 Ligands (i)

In the following table, the Atoms column lists the number of modelled atoms in the group and the number defined in the chemical component dictionary. The B-factors column lists the minimum, median, 95th percentile and maximum values of B factors of atoms in the group. The column labelled 'Q< 0.9' lists the number of atoms with occupancy less than 0.9.

Mol	Type	Chain	Res	Atoms	RSCC	RSR	B-factors(Å^2)	Q<0.9
4	NAG	A	706	14/15	0.71	0.20	151,152,154,155	0
4	NAG	A	707	14/15	0.77	0.26	162,163,164,164	0

Continued on next page...

Continued from previous page...

Mol	Type	Chain	Res	Atoms	RSCC	RSR	B-factors(Å^2)	Q<0.9
4	NAG	A	709	14/15	0.78	0.49	155,157,160,160	0
4	NAG	A	708	14/15	0.79	0.24	147,148,152,152	0
4	NAG	A	705	14/15	0.79	0.26	159,161,163,163	0
4	NAG	A	711	14/15	0.83	0.17	154,156,157,157	0
3	SO4	A	704	5/5	0.87	0.19	128,129,129,129	0
4	NAG	A	710	14/15	0.94	0.19	124,126,131,132	0
2	CA	A	701	1/1	0.94	0.45	105,105,105,105	0
3	SO4	A	703	5/5	0.96	0.23	93,93,94,95	0
3	SO4	A	702	5/5	0.98	0.21	81,81,83,84	0

6.5 Other polymers (i)

There are no such residues in this entry.