Full wwPDB X-ray Structure Validation Report (i)

May 14, 2020 – 10:58 pm BST

PDB ID	:	4I0J
Title	:	SPR and structural analysis yield insight towards mechanism of inhibition of BACE inhibitors
Authors	:	Yao, N.; Brecht, E.
Deposited on	:	2012-11-16
Resolution	:	1.99 Å(reported)

This is a Full wwPDB X-ray Structure Validation Report for a publicly released PDB entry.

We welcome your comments at *validation@mail.wwpdb.org*
A user guide is available at
https://www.wwpdb.org/validation/2017/XrayValidationReportHelp
with specific help available everywhere you see the (i) symbol.

The following versions of software and data (see references (i)) were used in the production of this report:

MolProbity	:	4.02b-467
Mogul	:	1.8.5 (274361), CSD as541be (2020)
Xtriage (Phenix)	:	1.13
EDS	:	2.11
buster-report	:	1.1.7 (2018)
Percentile statistics	:	20191225.v01 (using entries in the PDB archive December 25th 2019)
Refmac	:	5.8.0158
CCP4	:	7.0.044 (Gargrove)
Ideal geometry (proteins)	:	Engh & Huber (2001)
Ideal geometry (DNA, RNA)	:	Parkinson et al. (1996)
Validation Pipeline (wwPDB-VP)	:	2.11

1 Overall quality at a glance (i)

The following experimental techniques were used to determine the structure:
X-RAY DIFFRACTION

The reported resolution of this entry is 1.99 Å.

Percentile scores (ranging between 0-100) for global validation metrics of the entry are shown in the following graphic. The table shows the number of entries on which the scores are based.

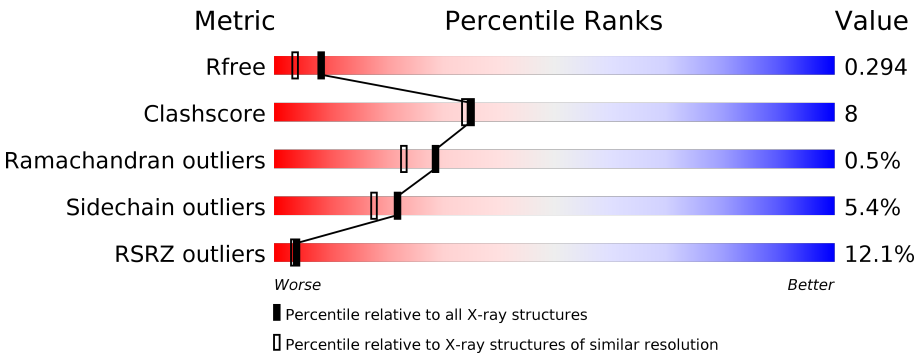

Metric	Whole archive (#Entries)	Similar resolution (#Entries, resolution range(Å))
R_{free}	130704	8085 (2.00-2.00)
Clashscore	141614	9178 (2.00-2.00)
Ramachandran outliers	138981	9054 (2.00-2.00)
Sidechain outliers	138945	9053 (2.00-2.00)
RSRZ outliers	127900	7900 (2.00-2.00)

The table below summarises the geometric issues observed across the polymeric chains and their fit to the electron density. The red, orange, yellow and green segments on the lower bar indicate the fraction of residues that contain outliers for >=3, 2, 1 and 0 types of geometric quality criteria respectively. A grey segment represents the fraction of residues that are not modelled. The numeric value for each fraction is indicated below the corresponding segment, with a dot representing fractions <=5% The upper red bar (where present) indicates the fraction of residues that have poor fit to the electron density. The numeric value is given above the bar.

Mol	Chain	Length	Quality of chain
1	A	406	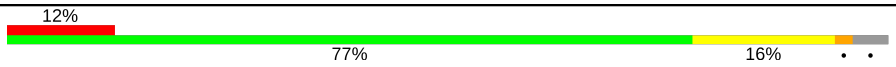

2 Entry composition (i)

There are 4 unique types of molecules in this entry. The entry contains 3327 atoms, of which 0 are hydrogens and 0 are deuteriums.

In the tables below, the ZeroOcc column contains the number of atoms modelled with zero occupancy, the AltConf column contains the number of residues with at least one atom in alternate conformation and the Trace column contains the number of residues modelled with at most 2 atoms.

- Molecule 1 is a protein called Beta-secretase 1.

Mol	Chain	Residues	Atoms					ZeroOcc	AltConf	Trace
			Total	C	N	O	S			
1	A	388	3063	1956	518	575	14	0	0	0

There are 9 discrepancies between the modelled and reference sequences:

Chain	Residue	Modelled	Actual	Comment	Reference
A	56	MET	-	EXPRESSION TAG	UNP P56817
A	454	ARG	-	EXPRESSION TAG	UNP P56817
A	455	SER	-	EXPRESSION TAG	UNP P56817
A	456	HIS	-	EXPRESSION TAG	UNP P56817
A	457	HIS	-	EXPRESSION TAG	UNP P56817
A	458	HIS	-	EXPRESSION TAG	UNP P56817
A	459	HIS	-	EXPRESSION TAG	UNP P56817
A	460	HIS	-	EXPRESSION TAG	UNP P56817
A	461	HIS	-	EXPRESSION TAG	UNP P56817

- Molecule 2 is ZINC ION (three-letter code: ZN) (formula: Zn).

Mol	Chain	Residues	Atoms		ZeroOcc	AltConf
			Total	Zn		
2	A	4	4	4	0	0

- Molecule 3 is N-[(1S,2R)-1-(3,5-difluorobenzyl)-2-hydroxy-3-({1-[3-(1H-pyrazol-1-yl)phenyl]cyclohexyl}amino)propyl]acetamide (three-letter code: 842) (formula: $C_{27}H_{32}F_2N_4O_2$).

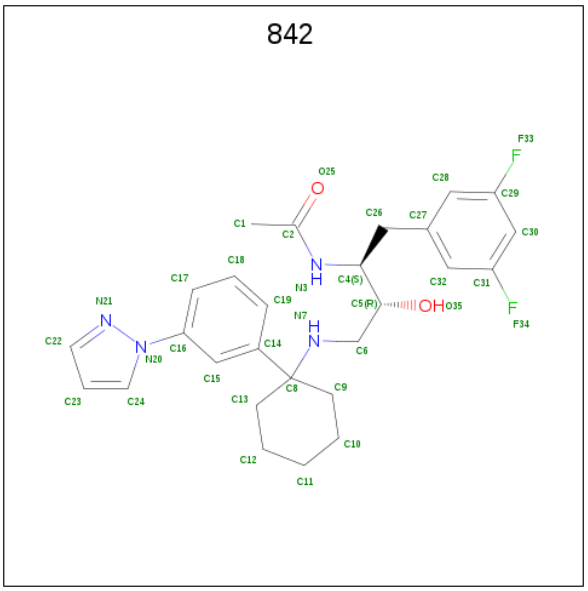

Mol	Chain	Residues	Atoms					ZeroOcc	AltConf
			Total	C	F	N	O		
3	A	1	35	27	2	4	2	0	0

- Molecule 4 is water.

Mol	Chain	Residues	Atoms		ZeroOcc	AltConf
			Total	O		
4	A	225	225	225	0	0

3 Residue-property plots (i)

These plots are drawn for all protein, RNA and DNA chains in the entry. The first graphic for a chain summarises the proportions of the various outlier classes displayed in the second graphic. The second graphic shows the sequence view annotated by issues in geometry and electron density. Residues are color-coded according to the number of geometric quality criteria for which they contain at least one outlier: green = 0, yellow = 1, orange = 2 and red = 3 or more. A red dot above a residue indicates a poor fit to the electron density (RSRZ > 2). Stretches of 2 or more consecutive residues without any outlier are shown as a green connector. Residues present in the sample, but not in the model, are shown in grey.

- Molecule 1: Beta-secretase 1

Chain A:

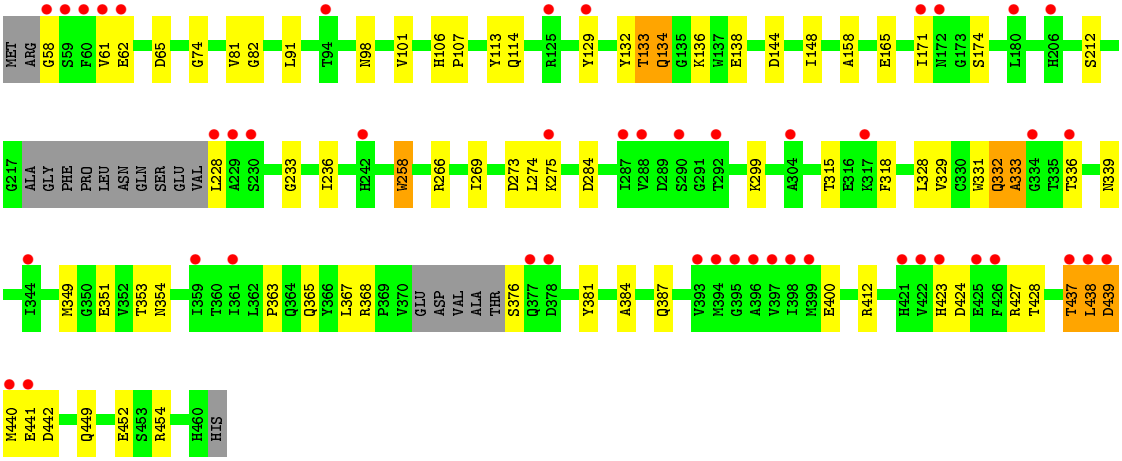

4 Data and refinement statistics (i)

Property	Value	Source
Space group	C 2 2 21	Depositor
Cell constants a, b, c, α, β, γ	75.23Å 104.04Å 99.06Å 90.00° 90.00° 90.00°	Depositor
Resolution (Å)	60.00 – 1.99 35.87 – 1.99	Depositor EDS
% Data completeness (in resolution range)	96.2 (60.00-1.99) 96.3 (35.87-1.99)	Depositor EDS
R_{merge}	(Not available)	Depositor
R_{sym}	(Not available)	Depositor
$< I/\sigma(I) >$ [1]	2.02 (at 2.00Å)	Xtriage
Refinement program	REFMAC 5.5.0102	Depositor
R, R_{free}	0.226 , 0.295 0.229 , 0.294	Depositor DCC
R_{free} test set	1305 reflections (5.01%)	wwPDB-VP
Wilson B-factor (Å^2)	36.1	Xtriage
Anisotropy	0.159	Xtriage
Bulk solvent k_{sol}(e/Å^3), B_{sol}(Å^2)	0.37 , 54.0	EDS
L-test for twinning[2]	$< \|L\| > = 0.50$, $< L^2 > = 0.34$	Xtriage
Estimated twinning fraction	No twinning to report.	Xtriage
F_o,F_c correlation	0.95	EDS
Total number of atoms	3327	wwPDB-VP
Average B, all atoms (Å^2)	41.0	wwPDB-VP

Xtriage's analysis on translational NCS is as follows: *The largest off-origin peak in the Patterson function is 5.24% of the height of the origin peak. No significant pseudotranslation is detected.*

[1] Intensities estimated from amplitudes.

[2] Theoretical values of $< |L| >$, $< L^2 >$ for acentric reflections are 0.5, 0.333 respectively for untwinned datasets, and 0.375, 0.2 for perfectly twinned datasets.

5 Model quality (i)

5.1 Standard geometry (i)

Bond lengths and bond angles in the following residue types are not validated in this section: ZN, 842

The Z score for a bond length (or angle) is the number of standard deviations the observed value is removed from the expected value. A bond length (or angle) with $|Z| > 5$ is considered an outlier worth inspection. RMSZ is the root-mean-square of all Z scores of the bond lengths (or angles).

Mol	Chain	Bond lengths		Bond angles	
		RMSZ	$\#\|Z\|>5$	RMSZ	$\#\|Z\|>5$
1	A	0.95	0/3143	0.89	3/4269 (0.1%)

Chiral center outliers are detected by calculating the chiral volume of a chiral center and verifying if the center is modelled as a planar moiety or with the opposite hand.A planarity outlier is detected by checking planarity of atoms in a peptide group, atoms in a mainchain group or atoms of a sidechain that are expected to be planar.

Mol	Chain	#Chirality outliers	#Planarity outliers
1	A	0	1

There are no bond length outliers.

All (3) bond angle outliers are listed below:

Mol	Chain	Res	Type	Atoms	Z	Observed(^{o})	Ideal(^{o})
1	A	438	LEU	CA-CB-CG	7.11	131.65	115.30
1	A	284	ASP	CB-CG-OD2	6.74	124.36	118.30
1	A	412	ARG	NE-CZ-NH1	-5.73	117.43	120.30

There are no chirality outliers.

All (1) planarity outliers are listed below:

Mol	Chain	Res	Type	Group
1	A	258	TRP	Peptide

5.2 Too-close contacts (i)

In the following table, the Non-H and H(model) columns list the number of non-hydrogen atoms and hydrogen atoms in the chain respectively. The H(added) column lists the number of hydrogen atoms added and optimized by MolProbity. The Clashes column lists the number of clashes within

the asymmetric unit, whereas Symm-Clashes lists symmetry related clashes.

Mol	Chain	Non-H	H(model)	H(added)	Clashes	Symm-Clashes
1	A	3063	0	2958	50	0
2	A	4	0	0	0	0
3	A	35	0	32	3	0
4	A	225	0	0	18	0
All	All	3327	0	2990	50	0

The all-atom clashscore is defined as the number of clashes found per 1000 atoms (including hydrogen atoms). The all-atom clashscore for this structure is 8.

All (50) close contacts within the same asymmetric unit are listed below, sorted by their clash magnitude.

Atom-1	Atom-2	Interatomic distance (Å)	Clash overlap (Å)
1:A:339:ASN:HB3	4:A:759:HOH:O	1.48	1.10
1:A:439:ASP:O	1:A:442:ASP:HB2	1.65	0.96
1:A:400:GLU:HB2	4:A:615:HOH:O	1.71	0.91
1:A:98:ASN:ND2	4:A:661:HOH:O	2.16	0.79
1:A:349:MET:HG3	1:A:440:MET:HE3	1.66	0.78
1:A:424:ASP:HB3	1:A:427:ARG:O	1.87	0.75
1:A:368:ARG:HG3	1:A:384:ALA:HB2	1.75	0.69
1:A:74:GLY:HA3	1:A:91:LEU:HD11	1.75	0.68
1:A:158:ALA:HB1	4:A:820:HOH:O	1.94	0.67
1:A:437:THR:O	1:A:438:LEU:HD23	1.97	0.64
1:A:98:ASN:HA	4:A:661:HOH:O	2.00	0.61
1:A:368:ARG:CG	1:A:384:ALA:HB2	2.31	0.61
1:A:449:GLN:OE1	1:A:454:ARG:HD3	2.01	0.60
1:A:138:GLU:HB2	1:A:165:GLU:HG2	1.83	0.59
1:A:74:GLY:HA3	1:A:91:LEU:CD1	2.32	0.59
1:A:81:VAL:HG12	1:A:113:TYR:CE1	2.40	0.57
1:A:351:GLU:C	4:A:652:HOH:O	2.44	0.57
1:A:368:ARG:HD3	4:A:799:HOH:O	2.04	0.56
1:A:318:PHE:CD2	1:A:329:VAL:HG11	2.41	0.56
1:A:363:PRO:O	1:A:367:LEU:HB2	2.05	0.55
1:A:212:SER:OG	1:A:236:ILE:HB	2.09	0.53
1:A:269:ILE:HD12	1:A:274:LEU:HD21	1.89	0.52
1:A:365:GLN:HG2	4:A:615:HOH:O	2.09	0.52
1:A:266:ARG:CZ	1:A:273:ASP:OD2	2.59	0.51
1:A:439:ASP:O	4:A:720:HOH:O	2.19	0.50
1:A:387:GLN:NE2	4:A:736:HOH:O	2.43	0.50
1:A:65:ASP:HA	1:A:233:GLY:O	2.11	0.49
1:A:339:ASN:CB	4:A:759:HOH:O	2.30	0.49

Continued on next page...

Continued from previous page...

Atom-1	Atom-2	Interatomic distance (Å)	Clash overlap (Å)
1:A:101:VAL:O	1:A:101:VAL:HG23	2.12	0.48
1:A:133:THR:HG21	4:A:608:HOH:O	2.13	0.47
1:A:58:GLY:N	4:A:818:HOH:O	2.48	0.46
1:A:353:THR:O	1:A:354:ASN:HB2	2.17	0.45
1:A:328:LEU:HA	1:A:381:TYR:O	2.17	0.44
1:A:438:LEU:O	1:A:439:ASP:HB2	2.18	0.44
1:A:134:GLN:HB2	4:A:719:HOH:O	2.17	0.44
1:A:332:GLN:O	1:A:333:ALA:C	2.56	0.44
1:A:266:ARG:HD2	4:A:768:HOH:O	2.18	0.43
1:A:82:GLY:HA2	1:A:144:ASP:OD1	2.17	0.43
1:A:171:ILE:HB	1:A:174:SER:OG	2.18	0.43
1:A:113:TYR:OH	1:A:144:ASP:OD2	2.24	0.43
1:A:132:TYR:CG	3:A:505:842:H32	2.54	0.43
1:A:315:THR:HG23	4:A:807:HOH:O	2.20	0.42
1:A:133:THR:HG23	3:A:505:842:O25	2.20	0.41
1:A:106:HIS:HA	1:A:107:PRO:HD2	1.77	0.41
1:A:299:LYS:HG3	4:A:669:HOH:O	2.20	0.41
1:A:133:THR:HG22	3:A:505:842:H19	2.03	0.41
1:A:351:GLU:O	4:A:652:HOH:O	2.20	0.41
1:A:368:ARG:NH2	1:A:400:GLU:OE2	2.55	0.40
1:A:331:TRP:CE3	1:A:336:THR:HG23	2.56	0.40
1:A:437:THR:HB	1:A:438:LEU:H	1.67	0.40

There are no symmetry-related clashes.

5.3 Torsion angles (i)

5.3.1 Protein backbone (i)

In the following table, the Percentiles column shows the percent Ramachandran outliers of the chain as a percentile score with respect to all X-ray entries followed by that with respect to entries of similar resolution.

The Analysed column shows the number of residues for which the backbone conformation was analysed, and the total number of residues.

Mol	Chain	Analysed	Favoured	Allowed	Outliers	Percentiles
1	A	382/406 (94%)	359 (94%)	21 (6%)	2 (0%)	29 23

All (2) Ramachandran outliers are listed below:

Mol	Chain	Res	Type
1	A	439	ASP
1	A	333	ALA

5.3.2 Protein sidechains (i)

In the following table, the Percentiles column shows the percent sidechain outliers of the chain as a percentile score with respect to all X-ray entries followed by that with respect to entries of similar resolution.

The Analysed column shows the number of residues for which the sidechain conformation was analysed, and the total number of residues.

Mol	Chain	Analysed	Rotameric	Outliers	Percentiles
1	A	333/348 (96%)	315 (95%)	18 (5%)	22 18

All (18) residues with a non-rotameric sidechain are listed below:

Mol	Chain	Res	Type
1	A	61	VAL
1	A	62	GLU
1	A	114	GLN
1	A	129	TYR
1	A	133	THR
1	A	134	GLN
1	A	136	LYS
1	A	148	ILE
1	A	228	LEU
1	A	258	TRP
1	A	275	LYS
1	A	332	GLN
1	A	376	SER
1	A	423	HIS
1	A	428	THR
1	A	437	THR
1	A	441	GLU
1	A	452	GLU

Some sidechains can be flipped to improve hydrogen bonding and reduce clashes. All (3) such sidechains are listed below:

Mol	Chain	Res	Type
1	A	114	GLN
1	A	339	ASN

Continued on next page...

Continued from previous page...

Mol	Chain	Res	Type
1	A	355	GLN

5.3.3 RNA (i)

There are no RNA molecules in this entry.

5.4 Non-standard residues in protein, DNA, RNA chains (i)

There are no non-standard protein/DNA/RNA residues in this entry.

5.5 Carbohydrates (i)

There are no carbohydrates in this entry.

5.6 Ligand geometry (i)

Of 5 ligands modelled in this entry, 4 are monoatomic - leaving 1 for Mogul analysis.

In the following table, the Counts columns list the number of bonds (or angles) for which Mogul statistics could be retrieved, the number of bonds (or angles) that are observed in the model and the number of bonds (or angles) that are defined in the Chemical Component Dictionary. The Link column lists molecule types, if any, to which the group is linked. The Z score for a bond length (or angle) is the number of standard deviations the observed value is removed from the expected value. A bond length (or angle) with $|Z| > 2$ is considered an outlier worth inspection. RMSZ is the root-mean-square of all Z scores of the bond lengths (or angles).

Mol	Type	Chain	Res	Link	Bond lengths			Bond angles		
					Counts	RMSZ	$\#\|Z\| > 2$	Counts	RMSZ	$\#\|Z\| > 2$
3	842	A	505	-	35,38,38	1.30	3 (8%)	46,53,53	2.43	12 (26%)

In the following table, the Chirals column lists the number of chiral outliers, the number of chiral centers analysed, the number of these observed in the model and the number defined in the Chemical Component Dictionary. Similar counts are reported in the Torsion and Rings columns. '-' means no outliers of that kind were identified.

Mol	Type	Chain	Res	Link	Chirals	Torsions	Rings
3	842	A	505	-	-	3/28/38/38	0/4/4/4

All (3) bond length outliers are listed below:

Mol	Chain	Res	Type	Atoms	Z	Observed(Å)	Ideal(Å)
3	A	505	842	C16-N20	-3.43	1.34	1.44
3	A	505	842	C28-C29	2.48	1.41	1.37
3	A	505	842	C32-C31	2.26	1.41	1.37

All (12) bond angle outliers are listed below:

Mol	Chain	Res	Type	Atoms	Z	Observed(^{o})	Ideal(^{o})
3	A	505	842	C17-C16-N20	7.26	125.50	119.15
3	A	505	842	C16-C15-C14	7.12	124.98	120.05
3	A	505	842	C17-C16-C15	-5.99	114.65	121.74
3	A	505	842	C12-C13-C8	4.27	118.72	112.42
3	A	505	842	C23-C24-N20	-3.97	104.06	107.08
3	A	505	842	C13-C12-C11	3.67	117.05	111.37
3	A	505	842	C27-C26-C4	-3.39	107.45	113.33
3	A	505	842	C18-C17-C16	3.20	122.79	118.63
3	A	505	842	C27-C28-C29	3.15	121.67	118.81
3	A	505	842	C30-C29-C28	-2.84	119.93	123.52
3	A	505	842	C22-N21-N20	2.76	105.70	103.70
3	A	505	842	C19-C14-C8	2.05	124.28	121.08

There are no chirality outliers.

All (3) torsion outliers are listed below:

Mol	Chain	Res	Type	Atoms
3	A	505	842	C15-C14-C8-C13
3	A	505	842	C19-C14-C8-C13
3	A	505	842	C15-C16-N20-N21

There are no ring outliers.

1 monomer is involved in 3 short contacts:

Mol	Chain	Res	Type	Clashes	Symm-Clashes
3	A	505	842	3	0

The following is a two-dimensional graphical depiction of Mogul quality analysis of bond lengths, bond angles, torsion angles, and ring geometry for all instances of the Ligand of Interest. In addition, ligands with molecular weight > 250 and outliers as shown on the validation Tables will also be included. For torsion angles, if less then 5% of the Mogul distribution of torsion angles is within 10 degrees of the torsion angle in question, then that torsion angle is considered an outlier. Any bond that is central to one or more torsion angles identified as an outlier by Mogul will be highlighted in the graph. For rings, the root-mean-square deviation (RMSD) between the ring in question and similar rings identified by Mogul is calculated over all ring torsion angles. If the

average RMSD is greater than 60 degrees and the minimal RMSD between the ring in question and any Mogul-identified rings is also greater than 60 degrees, then that ring is considered an outlier. The outliers are highlighted in purple. The color gray indicates Mogul did not find sufficient equivalents in the CSD to analyse the geometry.

Ligand 842 A 505

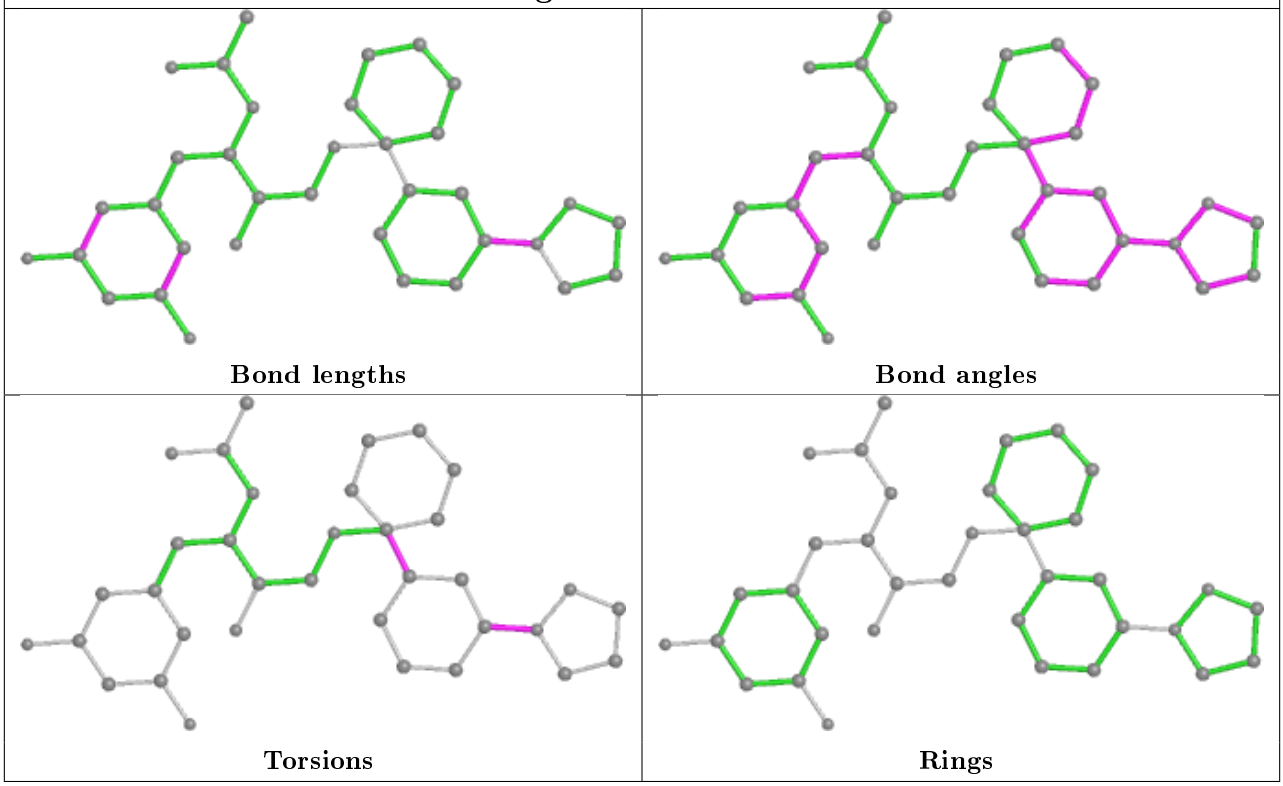

5.7 Other polymers (i)

There are no such residues in this entry.

5.8 Polymer linkage issues (i)

There are no chain breaks in this entry.

6 Fit of model and data (i)

6.1 Protein, DNA and RNA chains (i)

In the following table, the column labelled '#RSRZ> 2' contains the number (and percentage) of RSRZ outliers, followed by percent RSRZ outliers for the chain as percentile scores relative to all X-ray entries and entries of similar resolution. The OWAB column contains the minimum, median, 95th percentile and maximum values of the occupancy-weighted average B-factor per residue. The column labelled 'Q< 0.9' lists the number of (and percentage) of residues with an average occupancy less than 0.9.

Mol	Chain	Analysed	<RSRZ>	#RSRZ>2	OWAB(Å^2)	Q<0.9
1	A	388/406 (95%)	0.80	47 (12%) 4 3	27, 40, 57, 73	0

All (47) RSRZ outliers are listed below:

Mol	Chain	Res	Type	RSRZ
1	A	440	MET	7.0
1	A	59	SER	6.3
1	A	441	GLU	5.7
1	A	421	HIS	5.3
1	A	426	PHE	4.8
1	A	438	LEU	4.6
1	A	58	GLY	4.4
1	A	61	VAL	4.4
1	A	439	ASP	4.3
1	A	377	GLN	3.8
1	A	425	GLU	3.8
1	A	60	PHE	3.5
1	A	395	GLY	3.5
1	A	62	GLU	3.4
1	A	129	TYR	3.4
1	A	437	THR	3.3
1	A	394	MET	3.2
1	A	398	ILE	2.9
1	A	396	ALA	2.9
1	A	171	ILE	2.9
1	A	393	VAL	2.8
1	A	336	THR	2.8
1	A	292	THR	2.7
1	A	334	GLY	2.7
1	A	228	LEU	2.6
1	A	125	ARG	2.6
1	A	287	ILE	2.6

Continued on next page...

Continued from previous page...

Mol	Chain	Res	Type	RSRZ
1	A	344	ILE	2.6
1	A	230	SER	2.5
1	A	180	LEU	2.5
1	A	206	HIS	2.5
1	A	399	MET	2.5
1	A	94	THR	2.5
1	A	288	VAL	2.4
1	A	378	ASP	2.4
1	A	290	SER	2.3
1	A	423	HIS	2.3
1	A	275	LYS	2.3
1	A	422	VAL	2.3
1	A	317	LYS	2.3
1	A	172	ASN	2.2
1	A	242	HIS	2.2
1	A	359	ILE	2.2
1	A	361	ILE	2.2
1	A	397	VAL	2.2
1	A	304	ALA	2.1
1	A	229	ALA	2.0

6.2 Non-standard residues in protein, DNA, RNA chains (i)

There are no non-standard protein/DNA/RNA residues in this entry.

6.3 Carbohydrates (i)

There are no carbohydrates in this entry.

6.4 Ligands (i)

In the following table, the Atoms column lists the number of modelled atoms in the group and the number defined in the chemical component dictionary. The B-factors column lists the minimum, median, 95th percentile and maximum values of B factors of atoms in the group. The column labelled 'Q< 0.9' lists the number of atoms with occupancy less than 0.9.

Mol	Type	Chain	Res	Atoms	RSCC	RSR	B-factors(Å^2)	Q<0.9
2	ZN	A	504	1/1	0.60	0.29	84,84,84,84	0
2	ZN	A	502	1/1	0.77	0.18	60,60,60,60	0
3	842	A	505	35/35	0.93	0.14	28,36,41,42	0

Continued on next page...

Continued from previous page...

Mol	Type	Chain	Res	Atoms	RSCC	RSR	B-factors(Å^2)	Q<0.9
2	ZN	A	501	1/1	0.99	0.09	30,30,30,30	0
2	ZN	A	503	1/1	0.99	0.04	32,32,32,32	0

The following is a graphical depiction of the model fit to experimental electron density of all instances of the Ligand of Interest. In addition, ligands with molecular weight > 250 and outliers as shown on the geometry validation Tables will also be included. Each fit is shown from different orientation to approximate a three-dimensional view.

Electron density around 842 A 505:

2mF$_o$-DF$_c$ (at 0.7 rmsd) in gray
mF$_o$-DF$_c$ (at 3 rmsd) in purple (negative)
and green (positive)

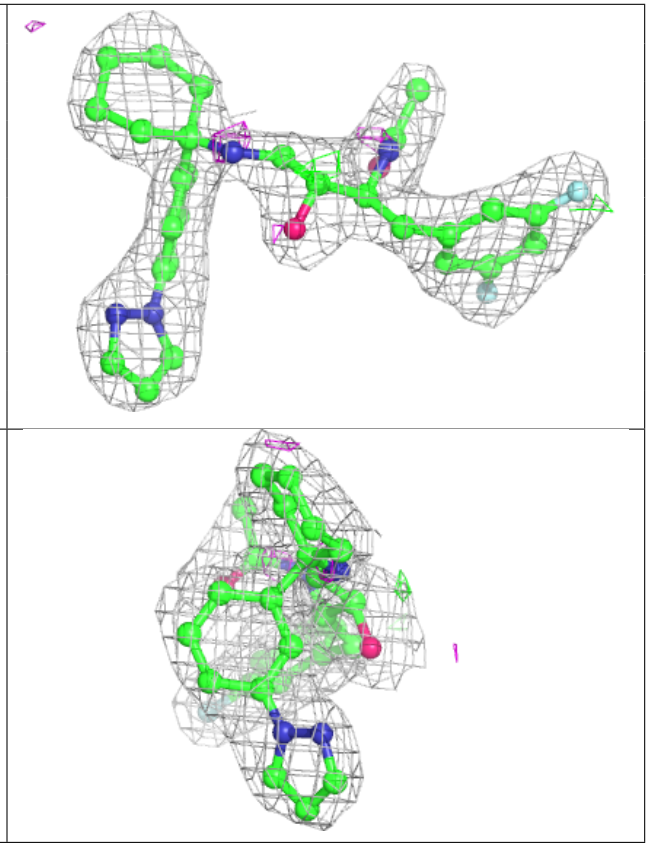

6.5 Other polymers (i)

There are no such residues in this entry.