Full wwPDB X-ray Structure Validation Report (i)

Jun 13, 2024 – 11:03 AM EDT

PDB ID	:	4GAD
Title	:	Crystal Structure of D230A/H234A Mutant of Stationary Phase Survival Protein (SurE) from Salmonella typhimurium
Authors	:	Mathiharan, Y.K.; Murthy, M.R.N.
Deposited on	:	2012-07-25
Resolution	:	2.35 Å(reported)

This is a Full wwPDB X-ray Structure Validation Report for a publicly released PDB entry.

We welcome your comments at *validation@mail.wwpdb.org*
A user guide is available at
https://www.wwpdb.org/validation/2017/XrayValidationReportHelp
with specific help available everywhere you see the (i) symbol.

The types of validation reports are described at
http://www.wwpdb.org/validation/2017/FAQs#types.

The following versions of software and data (see references (i)) were used in the production of this report:

MolProbity	:	4.02b-467
Mogul	:	2022.3.0, CSD as543be (2022)
Xtriage (Phenix)	:	1.20.1
EDS	:	2.36.2
Percentile statistics	:	20191225.v01 (using entries in the PDB archive December 25th 2019)
Refmac	:	5.8.0158
CCP4	:	7.0.044 (Gargrove)
Ideal geometry (proteins)	:	Engh & Huber (2001)
Ideal geometry (DNA, RNA)	:	Parkinson et al. (1996)
Validation Pipeline (wwPDB-VP)	:	2.36.2

1 Overall quality at a glance (i)

The following experimental techniques were used to determine the structure:
X-RAY DIFFRACTION

The reported resolution of this entry is 2.35 Å.

Percentile scores (ranging between 0-100) for global validation metrics of the entry are shown in the following graphic. The table shows the number of entries on which the scores are based.

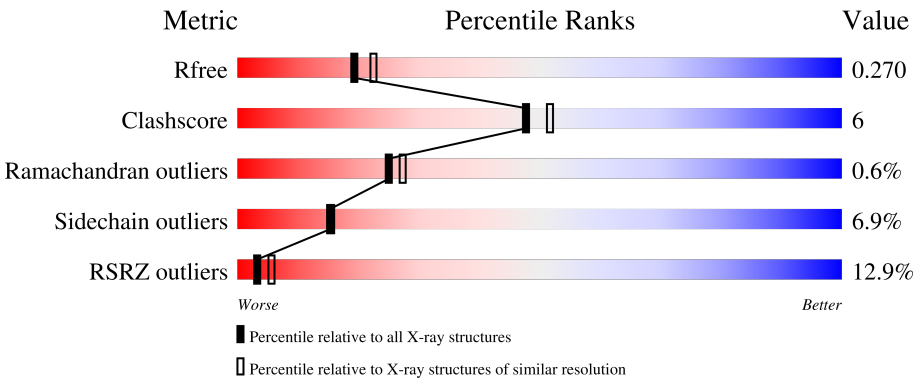

Metric	Whole archive (#Entries)	Similar resolution (#Entries, resolution range(Å))
R_{free}	130704	1164 (2.36-2.36)
Clashscore	141614	1232 (2.36-2.36)
Ramachandran outliers	138981	1211 (2.36-2.36)
Sidechain outliers	138945	1212 (2.36-2.36)
RSRZ outliers	127900	1150 (2.36-2.36)

The table below summarises the geometric issues observed across the polymeric chains and their fit to the electron density. The red, orange, yellow and green segments of the lower bar indicate the fraction of residues that contain outliers for >=3, 2, 1 and 0 types of geometric quality criteria respectively. A grey segment represents the fraction of residues that are not modelled. The numeric value for each fraction is indicated below the corresponding segment, with a dot representing fractions <=5% The upper red bar (where present) indicates the fraction of residues that have poor fit to the electron density. The numeric value is given above the bar.

Mol	Chain	Length	Quality of chain
1	A	267	11% 78% 14% 8%
1	B	267	13% 73% 17% • 9%

2 Entry composition (i)

There are 4 unique types of molecules in this entry. The entry contains 3726 atoms, of which 0 are hydrogens and 0 are deuteriums.

In the tables below, the ZeroOcc column contains the number of atoms modelled with zero occupancy, the AltConf column contains the number of residues with at least one atom in alternate conformation and the Trace column contains the number of residues modelled with at most 2 atoms.

- Molecule 1 is a protein called 5'/3'-nucleotidase SurE.

Mol	Chain	Residues	Atoms					ZeroOcc	AltConf	Trace
			Total	C	N	O	S			
1	A	245	1752	1091	315	338	8	0	2	0
1	B	244	1730	1076	309	339	6	0	1	0

There are 32 discrepancies between the modelled and reference sequences:

Chain	Residue	Modelled	Actual	Comment	Reference
A	-13	MET	-	expression tag	UNP P66881
A	-12	ARG	-	expression tag	UNP P66881
A	-11	GLY	-	expression tag	UNP P66881
A	-10	SER	-	expression tag	UNP P66881
A	-9	HIS	-	expression tag	UNP P66881
A	-8	HIS	-	expression tag	UNP P66881
A	-7	HIS	-	expression tag	UNP P66881
A	-6	HIS	-	expression tag	UNP P66881
A	-5	HIS	-	expression tag	UNP P66881
A	-4	HIS	-	expression tag	UNP P66881
A	-3	GLY	-	expression tag	UNP P66881
A	-2	MET	-	expression tag	UNP P66881
A	-1	ALA	-	expression tag	UNP P66881
A	0	SER	-	expression tag	UNP P66881
A	230	ALA	ASP	engineered mutation	UNP P66881
A	234	ALA	HIS	engineered mutation	UNP P66881
B	-13	MET	-	expression tag	UNP P66881
B	-12	ARG	-	expression tag	UNP P66881
B	-11	GLY	-	expression tag	UNP P66881
B	-10	SER	-	expression tag	UNP P66881
B	-9	HIS	-	expression tag	UNP P66881
B	-8	HIS	-	expression tag	UNP P66881
B	-7	HIS	-	expression tag	UNP P66881
B	-6	HIS	-	expression tag	UNP P66881
B	-5	HIS	-	expression tag	UNP P66881

Continued on next page...

Continued from previous page...

Chain	Residue	Modelled	Actual	Comment	Reference
B	-4	HIS	-	expression tag	UNP P66881
B	-3	GLY	-	expression tag	UNP P66881
B	-2	MET	-	expression tag	UNP P66881
B	-1	ALA	-	expression tag	UNP P66881
B	0	SER	-	expression tag	UNP P66881
B	230	ALA	ASP	engineered mutation	UNP P66881
B	234	ALA	HIS	engineered mutation	UNP P66881

- Molecule 2 is GLYCEROL (three-letter code: GOL) (formula: $C_3H_8O_3$).

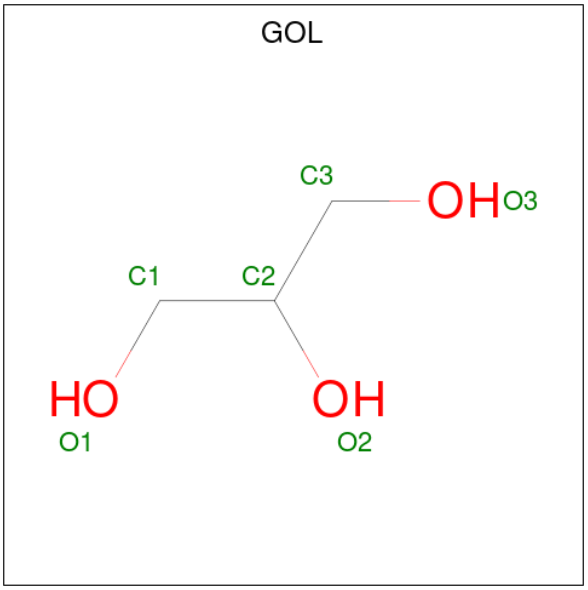

Mol	Chain	Residues	Atoms			ZeroOcc	AltConf
			Total	C	O		
2	A	1	6	3	3	0	0
			Total	C	O		
2	B	1	6	3	3	0	0

- Molecule 3 is MAGNESIUM ION (three-letter code: MG) (formula: Mg).

Mol	Chain	Residues	Atoms		ZeroOcc	AltConf
			Total	Mg		
3	A	1	1	1	0	0
			Total	Mg		
3	B	1	1	1	0	0

- Molecule 4 is water.

Mol	Chain	Residues	Atoms		ZeroOcc	AltConf
			Total	O		
4	A	130	130	130	0	0
			Total	O		
4	B	100	100	100	0	0

3 Residue-property plots (i)

These plots are drawn for all protein, RNA, DNA and oligosaccharide chains in the entry. The first graphic for a chain summarises the proportions of the various outlier classes displayed in the second graphic. The second graphic shows the sequence view annotated by issues in geometry and electron density. Residues are color-coded according to the number of geometric quality criteria for which they contain at least one outlier: green = 0, yellow = 1, orange = 2 and red = 3 or more. A red dot above a residue indicates a poor fit to the electron density (RSRZ > 2). Stretches of 2 or more consecutive residues without any outlier are shown as a green connector. Residues present in the sample, but not in the model, are shown in grey.

• Molecule 1: 5'/3'-nucleotidase SurE

Chain A:

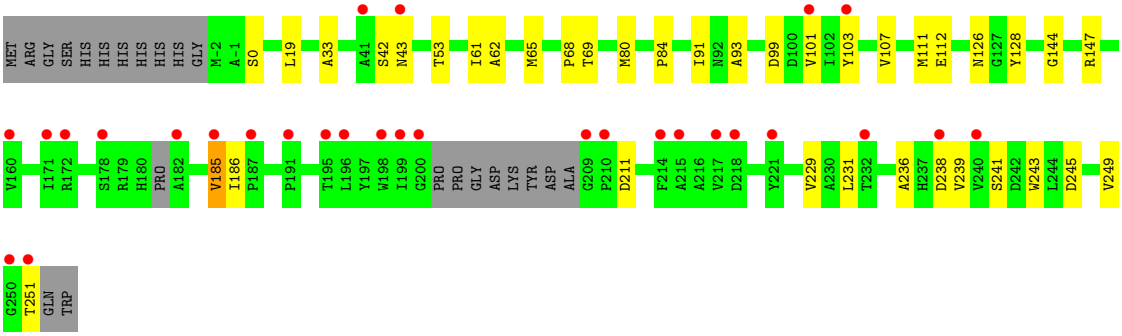

• Molecule 1: 5'/3'-nucleotidase SurE

Chain B:

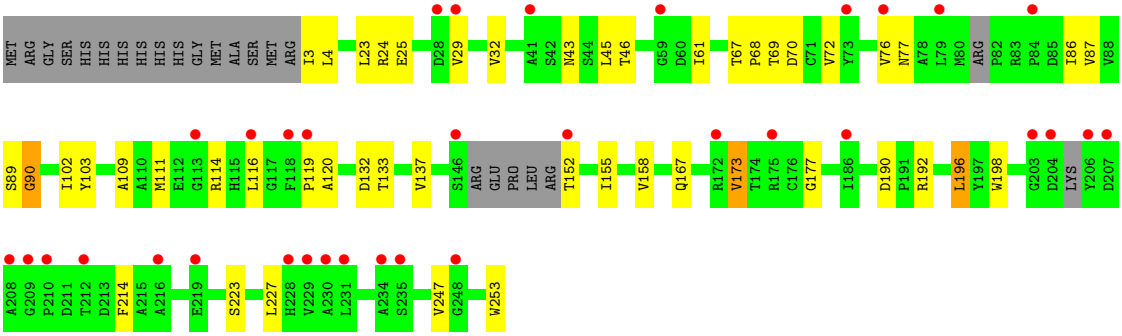

4 Data and refinement statistics (i)

Property	Value	Source
Space group	C 2 2 21	Depositor
Cell constants a, b, c, α, β, γ	80.60Å 97.33Å 127.15Å 90.00° 90.00° 90.00°	Depositor
Resolution (Å)	40.00 – 2.35 38.64 – 2.35	Depositor EDS
% Data completeness (in resolution range)	100.0 (40.00-2.35) 100.0 (38.64-2.35)	Depositor EDS
R_{merge}	0.07	Depositor
R_{sym}	(Not available)	Depositor
$< I/\sigma(I) >$ [1]	3.05 (at 2.34Å)	Xtriage
Refinement program	REFMAC 5.6.0117	Depositor
R, R_{free}	0.220 , 0.269 0.225 , 0.270	Depositor DCC
R_{free} test set	1089 reflections (5.13%)	wwPDB-VP
Wilson B-factor (Å^2)	42.3	Xtriage
Anisotropy	0.085	Xtriage
Bulk solvent k_{sol}(e/Å^3), B_{sol}(Å^2)	0.32 , 53.5	EDS
L-test for twinning[2]	$< \|L\| > = 0.47$, $< L^2 > = 0.30$	Xtriage
Estimated twinning fraction	No twinning to report.	Xtriage
F_o,F_c correlation	0.93	EDS
Total number of atoms	3726	wwPDB-VP
Average B, all atoms (Å^2)	72.0	wwPDB-VP

Xtriage's analysis on translational NCS is as follows: *The largest off-origin peak in the Patterson function is 4.22% of the height of the origin peak. No significant pseudotranslation is detected.*

[1]Intensities estimated from amplitudes.

[2]Theoretical values of $< |L| >$, $< L^2 >$ for acentric reflections are 0.5, 0.333 respectively for untwinned datasets, and 0.375, 0.2 for perfectly twinned datasets.

5 Model quality (i)

5.1 Standard geometry (i)

Bond lengths and bond angles in the following residue types are not validated in this section: MG, GOL

The Z score for a bond length (or angle) is the number of standard deviations the observed value is removed from the expected value. A bond length (or angle) with $|Z| > 5$ is considered an outlier worth inspection. RMSZ is the root-mean-square of all Z scores of the bond lengths (or angles).

Mol	Chain	Bond lengths		Bond angles	
		RMSZ	$\#\|Z\|>5$	RMSZ	$\#\|Z\|>5$
1	A	0.43	1/1793 (0.1%)	0.57	0/2452
1	B	0.45	2/1767 (0.1%)	0.57	0/2422
All	All	0.44	3/3560 (0.1%)	0.57	0/4874

All (3) bond length outliers are listed below:

Mol	Chain	Res	Type	Atoms	Z	Observed(Å)	Ideal(Å)
1	B	198	TRP	CD2-CE2	5.15	1.47	1.41
1	A	243	TRP	CD2-CE2	5.04	1.47	1.41
1	B	253	TRP	CD2-CE2	5.01	1.47	1.41

There are no bond angle outliers.

There are no chirality outliers.

There are no planarity outliers.

5.2 Too-close contacts (i)

In the following table, the Non-H and H(model) columns list the number of non-hydrogen atoms and hydrogen atoms in the chain respectively. The H(added) column lists the number of hydrogen atoms added and optimized by MolProbity. The Clashes column lists the number of clashes within the asymmetric unit, whereas Symm-Clashes lists symmetry-related clashes.

Mol	Chain	Non-H	H(model)	H(added)	Clashes	Symm-Clashes
1	A	1752	0	1686	17	0
1	B	1730	0	1635	28	0
2	A	6	0	8	0	0
2	B	6	0	8	0	0
3	A	1	0	0	0	0
3	B	1	0	0	0	0

Continued on next page...

Continued from previous page...

Mol	Chain	Non-H	H(model)	H(added)	Clashes	Symm-Clashes
4	A	130	0	0	0	0
4	B	100	0	0	6	0
All	All	3726	0	3337	42	0

The all-atom clashscore is defined as the number of clashes found per 1000 atoms (including hydrogen atoms). The all-atom clashscore for this structure is 6.

All (42) close contacts within the same asymmetric unit are listed below, sorted by their clash magnitude.

Atom-1	Atom-2	Interatomic distance (Å)	Clash overlap (Å)
1:B:4:LEU:HB3	1:B:87:VAL:HG12	1.65	0.78
1:B:214:PHE:HD2	4:B:483:HOH:O	1.68	0.75
1:B:43:ASN:ND2	4:B:473:HOH:O	2.23	0.70
1:A:144:GLY:HA2	1:B:247:VAL:HG11	1.74	0.68
1:A:229:VAL:HG21	1:B:102:ILE:HD11	1.77	0.65
1:A:185:VAL:HG13	1:A:186:ILE:H	1.65	0.62
1:A:43[A]:ASN:HD22	1:A:68:PRO:HD2	1.67	0.60
1:B:67:THR:HG23	1:B:68:PRO:HD2	1.83	0.60
1:B:67:THR:HG22	1:B:69:THR:H	1.67	0.60
1:A:185:VAL:HG13	1:A:186:ILE:N	2.18	0.59
1:A:43[A]:ASN:HD21	1:A:69:THR:H	1.51	0.58
1:B:76:VAL:HG12	1:B:77:ASN:OD1	2.04	0.56
1:B:24:ARG:HG3	1:B:29:VAL:HG22	1.88	0.55
1:A:19:LEU:HD22	1:A:91:ILE:HG13	1.89	0.53
1:A:103:TYR:HD2	4:B:451:HOH:O	1.93	0.51
1:A:80:MET:HB3	1:A:84:PRO:HD3	1.93	0.50
1:B:86:ILE:HG13	1:B:119:PRO:O	2.12	0.49
1:A:101:VAL:HB	1:A:107:VAL:HG21	1.94	0.49
1:B:158:VAL:HA	1:B:223:SER:O	2.13	0.48
1:B:111:MET:SD	1:B:155:ILE:HD12	2.53	0.48
1:B:111:MET:HA	1:B:155:ILE:HD11	1.96	0.48
1:A:33:ALA:O	1:A:62:ALA:HA	2.14	0.48
1:B:72:VAL:HG21	1:B:109:ALA:O	2.13	0.48
1:B:190:ASP:HB3	1:B:196:LEU:HD11	1.97	0.47
1:B:133:THR:O	1:B:137:VAL:HG23	2.15	0.47
1:B:3:ILE:HB	1:B:29:VAL:HG12	1.98	0.46
1:B:120:ALA:HB3	1:B:155:ILE:HG12	1.98	0.46
1:B:214:PHE:CD2	4:B:483:HOH:O	2.55	0.45
1:A:238:ASP:HA	1:A:241:SER:HB3	1.99	0.45
1:B:89:SER:O	1:B:90:GLY:O	2.36	0.43
1:A:93:ALA:HB1	1:A:128:TYR:CD1	2.54	0.43

Continued on next page...

Continued from previous page...

Atom-1	Atom-2	Interatomic distance (Å)	Clash overlap (Å)
1:B:177:GLY:HA3	4:B:483:HOH:O	2.18	0.43
1:B:32:VAL:HG22	1:B:61:ILE:HB	2.02	0.42
1:A:236:ALA:HA	1:A:239:VAL:HG12	2.02	0.42
1:B:132:ASP:HB2	4:B:421:HOH:O	2.19	0.42
1:A:185:VAL:HG22	1:A:186:ILE:H	1.84	0.42
1:B:45:LEU:HA	1:B:70:ASP:OD1	2.20	0.42
1:B:67:THR:HG22	1:B:69:THR:N	2.33	0.42
1:A:241:SER:HB2	1:B:173:VAL:HG21	2.03	0.41
1:A:69:THR:HG22	1:A:112:GLU:HB2	2.01	0.41
1:B:67:THR:HG23	1:B:68:PRO:CD	2.49	0.40

There are no symmetry-related clashes.

5.3 Torsion angles (i)

5.3.1 Protein backbone (i)

In the following table, the Percentiles column shows the percent Ramachandran outliers of the chain as a percentile score with respect to all X-ray entries followed by that with respect to entries of similar resolution.

The Analysed column shows the number of residues for which the backbone conformation was analysed, and the total number of residues.

Mol	Chain	Analysed	Favoured	Allowed	Outliers	Percentiles	
1	A	241/267 (90%)	229 (95%)	10 (4%)	2 (1%)	19	20
1	B	237/267 (89%)	225 (95%)	11 (5%)	1 (0%)	34	38
All	All	478/534 (90%)	454 (95%)	21 (4%)	3 (1%)	25	27

All (3) Ramachandran outliers are listed below:

Mol	Chain	Res	Type
1	B	90	GLY
1	A	126	ASN
1	A	185	VAL

5.3.2 Protein sidechains (i)

In the following table, the Percentiles column shows the percent sidechain outliers of the chain as a percentile score with respect to all X-ray entries followed by that with respect to entries of similar resolution.

The Analysed column shows the number of residues for which the sidechain conformation was analysed, and the total number of residues.

Mol	Chain	Analysed	Rotameric	Outliers	Percentiles	
1	A	179/213 (84%)	165 (92%)	14 (8%)	12	12
1	B	174/213 (82%)	163 (94%)	11 (6%)	18	19
All	All	353/426 (83%)	328 (93%)	25 (7%)	15	15

All (25) residues with a non-rotameric sidechain are listed below:

Mol	Chain	Res	Type
1	A	0	SER
1	A	42	SER
1	A	53	THR
1	A	61	ILE
1	A	65	MET
1	A	99	ASP
1	A	111[A]	MET
1	A	111[B]	MET
1	A	147	ARG
1	A	211	ASP
1	A	231	LEU
1	A	245	ASP
1	A	249	VAL
1	A	251	THR
1	B	23	LEU
1	B	25	GLU
1	B	46	THR
1	B	114	ARG
1	B	116	LEU
1	B	152	THR
1	B	167	GLN
1	B	173	VAL
1	B	192	ARG
1	B	196	LEU
1	B	227	LEU

Sometimes sidechains can be flipped to improve hydrogen bonding and reduce clashes. There are

no such sidechains identified.

5.3.3 RNA (i)

There are no RNA molecules in this entry.

5.4 Non-standard residues in protein, DNA, RNA chains (i)

There are no non-standard protein/DNA/RNA residues in this entry.

5.5 Carbohydrates (i)

There are no monosaccharides in this entry.

5.6 Ligand geometry (i)

Of 4 ligands modelled in this entry, 2 are monoatomic - leaving 2 for Mogul analysis.

In the following table, the Counts columns list the number of bonds (or angles) for which Mogul statistics could be retrieved, the number of bonds (or angles) that are observed in the model and the number of bonds (or angles) that are defined in the Chemical Component Dictionary. The Link column lists molecule types, if any, to which the group is linked. The Z score for a bond length (or angle) is the number of standard deviations the observed value is removed from the expected value. A bond length (or angle) with $|Z| > 2$ is considered an outlier worth inspection. RMSZ is the root-mean-square of all Z scores of the bond lengths (or angles).

Mol	Type	Chain	Res	Link	Bond lengths			Bond angles		
					Counts	RMSZ	$\#\|Z\| > 2$	Counts	RMSZ	$\#\|Z\| > 2$
2	GOL	A	301	-	5,5,5	0.36	0	5,5,5	0.25	0
2	GOL	B	301	-	5,5,5	0.27	0	5,5,5	0.40	0

In the following table, the Chirals column lists the number of chiral outliers, the number of chiral centers analysed, the number of these observed in the model and the number defined in the Chemical Component Dictionary. Similar counts are reported in the Torsion and Rings columns. '-' means no outliers of that kind were identified.

Mol	Type	Chain	Res	Link	Chirals	Torsions	Rings
2	GOL	A	301	-	-	4/4/4/4	-
2	GOL	B	301	-	-	0/4/4/4	-

There are no bond length outliers.

There are no bond angle outliers.

There are no chirality outliers.

All (4) torsion outliers are listed below:

Mol	Chain	Res	Type	Atoms
2	A	301	GOL	O1-C1-C2-C3
2	A	301	GOL	C1-C2-C3-O3
2	A	301	GOL	O1-C1-C2-O2
2	A	301	GOL	O2-C2-C3-O3

There are no ring outliers.

No monomer is involved in short contacts.

5.7 Other polymers (i)

There are no such residues in this entry.

5.8 Polymer linkage issues (i)

There are no chain breaks in this entry.

6 Fit of model and data (i)

6.1 Protein, DNA and RNA chains (i)

In the following table, the column labelled '#RSRZ> 2' contains the number (and percentage) of RSRZ outliers, followed by percent RSRZ outliers for the chain as percentile scores relative to all X-ray entries and entries of similar resolution. The OWAB column contains the minimum, median, 95th percentile and maximum values of the occupancy-weighted average B-factor per residue. The column labelled 'Q< 0.9' lists the number of (and percentage) of residues with an average occupancy less than 0.9.

Mol	Chain	Analysed	<RSRZ>	#RSRZ>2			OWAB(Å^2)	Q<0.9
1	A	245/267 (91%)	0.67	29 (11%)	4	7	31, 59, 131, 163	0
1	B	244/267 (91%)	0.83	34 (13%)	2	4	41, 78, 120, 152	0
All	All	489/534 (91%)	0.75	63 (12%)	3	5	31, 70, 128, 163	0

All (63) RSRZ outliers are listed below:

Mol	Chain	Res	Type	RSRZ
1	A	195	THR	11.1
1	A	191	PRO	7.9
1	A	210	PRO	6.3
1	A	196	LEU	5.6
1	A	182	ALA	5.0
1	A	215	ALA	4.6
1	B	229	VAL	4.4
1	B	79	LEU	4.4
1	B	208	ALA	4.4
1	B	204	ASP	4.1
1	B	118	PHE	4.1
1	B	59	GLY	3.9
1	A	198	TRP	3.7
1	B	175	ARG	3.7
1	B	116	LEU	3.7
1	A	214	PHE	3.7
1	B	216	ALA	3.5
1	A	209	GLY	3.4
1	A	187	PRO	3.3
1	B	203	GLY	3.3
1	A	178	SER	3.3
1	A	250	GLY	3.2
1	A	199	ILE	3.2
1	A	41	ALA	3.2

Continued on next page...

Continued from previous page...

Mol	Chain	Res	Type	RSRZ
1	B	209	GLY	3.2
1	B	230	ALA	3.0
1	B	119	PRO	3.0
1	B	29	VAL	2.9
1	B	231	LEU	2.9
1	A	251	THR	2.9
1	A	240	VAL	2.7
1	B	210	PRO	2.7
1	B	212	THR	2.7
1	A	43[A]	ASN	2.7
1	B	28	ASP	2.7
1	B	152	THR	2.6
1	A	217	VAL	2.6
1	B	206	TYR	2.6
1	B	234	ALA	2.6
1	A	103	TYR	2.5
1	B	84	PRO	2.5
1	B	113	GLY	2.5
1	A	221	TYR	2.4
1	B	146	SER	2.4
1	A	185	VAL	2.4
1	B	219	GLU	2.4
1	B	76	VAL	2.4
1	B	235	SER	2.3
1	B	73	TYR	2.3
1	A	238	ASP	2.3
1	A	218	ASP	2.3
1	B	207	ASP	2.2
1	A	232	THR	2.2
1	A	172	ARG	2.2
1	B	228	HIS	2.2
1	A	200	GLY	2.2
1	A	101	VAL	2.1
1	B	41	ALA	2.1
1	A	171	ILE	2.1
1	B	186	ILE	2.1
1	A	160	VAL	2.1
1	B	172	ARG	2.1
1	B	248	GLY	2.1

6.2 Non-standard residues in protein, DNA, RNA chains (i)

There are no non-standard protein/DNA/RNA residues in this entry.

6.3 Carbohydrates (i)

There are no monosaccharides in this entry.

6.4 Ligands (i)

In the following table, the Atoms column lists the number of modelled atoms in the group and the number defined in the chemical component dictionary. The B-factors column lists the minimum, median, 95th percentile and maximum values of B factors of atoms in the group. The column labelled 'Q< 0.9' lists the number of atoms with occupancy less than 0.9.

Mol	Type	Chain	Res	Atoms	RSCC	RSR	B-factors(Å^2)	Q<0.9
2	GOL	B	301	6/6	0.88	0.18	54,55,57,58	0
2	GOL	A	301	6/6	0.89	0.26	50,62,65,66	0
3	MG	A	302	1/1	0.96	0.18	51,51,51,51	0
3	MG	B	302	1/1	0.98	0.26	62,62,62,62	0

6.5 Other polymers (i)

There are no such residues in this entry.