wwPDB X-ray Structure Validation Summary Report (i)

Jun 23, 2024 – 05:09 AM EDT

PDB ID	:	5CYL
Title	:	Crystal structure of the CupB6 tip adhesin from Pseudomonas aeruginosa
Authors	:	Rasheed, M.; Garnett, J.A.; Perez-Dorado, I.; Matthews, S.J.
Deposited on	:	2015-07-30
Resolution	:	2.77 Å(reported)

This is a wwPDB X-ray Structure Validation Summary Report for a publicly released PDB entry.

We welcome your comments at *validation@mail.wwpdb.org*
A user guide is available at
https://www.wwpdb.org/validation/2017/XrayValidationReportHelp
with specific help available everywhere you see the (i) symbol.

The types of validation reports are described at
http://www.wwpdb.org/validation/2017/FAQs#types.

The following versions of software and data (see references (1)) were used in the production of this report:

MolProbity	:	4.02b-467
Xtriage (Phenix)	:	1.13
EDS	:	2.37.1
Percentile statistics	:	20191225.v01 (using entries in the PDB archive December 25th 2019)
Refmac	:	5.8.0158
CCP4	:	7.0.044 (Gargrove)
Ideal geometry (proteins)	:	Engh & Huber (2001)
Ideal geometry (DNA, RNA)	:	Parkinson et al. (1996)
Validation Pipeline (wwPDB-VP)	:	2.37.1

1 Overall quality at a glance (i)

The following experimental techniques were used to determine the structure:
X-RAY DIFFRACTION

The reported resolution of this entry is 2.77 Å.

Percentile scores (ranging between 0-100) for global validation metrics of the entry are shown in the following graphic. The table shows the number of entries on which the scores are based.

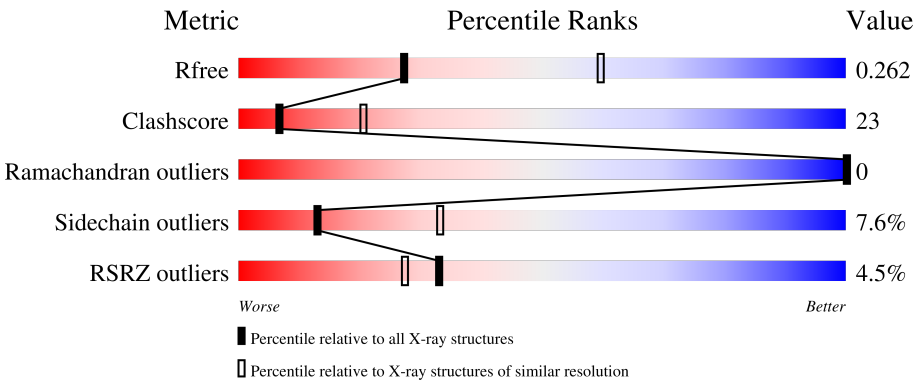

Metric	Whole archive (#Entries)	Similar resolution (#Entries, resolution range(Å))
R_{free}	130704	4107 (2.80-2.76)
Clashscore	141614	4575 (2.80-2.76)
Ramachandran outliers	138981	4487 (2.80-2.76)
Sidechain outliers	138945	4489 (2.80-2.76)
RSRZ outliers	127900	4027 (2.80-2.76)

The table below summarises the geometric issues observed across the polymeric chains and their fit to the electron density. The red, orange, yellow and green segments of the lower bar indicate the fraction of residues that contain outliers for >=3, 2, 1 and 0 types of geometric quality criteria respectively. A grey segment represents the fraction of residues that are not modelled. The numeric value for each fraction is indicated below the corresponding segment, with a dot representing fractions <=5% The upper red bar (where present) indicates the fraction of residues that have poor fit to the electron density. The numeric value is given above the bar.

Mol	Chain	Length	Quality of chain
1	A	370	2%, 66%, 29%, • •
1	B	370	4%, 65%, 28%, • •
1	C	370	4%, 64%, 28%, • 5%
1	D	370	6%, 61%, 34%, • •
1	E	370	4%, 63%, 28%, 5%, •

Continued on next page...

Continued from previous page...

Mol	Chain	Length	Quality of chain
1	F	370	4% 54% 35% • 8%
1	G	370	9% 58% 34% • 5%
1	H	370	2% 75% 20% • •

2 Entry composition (i)

There are 2 unique types of molecules in this entry. The entry contains 20981 atoms, of which 0 are hydrogens and 0 are deuteriums.

In the tables below, the ZeroOcc column contains the number of atoms modelled with zero occupancy, the AltConf column contains the number of residues with at least one atom in alternate conformation and the Trace column contains the number of residues modelled with at most 2 atoms.

- Molecule 1 is a protein called Fimbrial subunit CupB6.

Mol	Chain	Residues	Atoms					ZeroOcc	AltConf	Trace
			Total	C	N	O	S			
1	A	361	2637	1664	455	513	5	0	0	0
1	B	355	2608	1650	444	509	5	0	0	0
1	C	353	2574	1630	439	500	5	0	0	0
1	D	359	2616	1654	446	511	5	0	0	0
1	E	355	2602	1643	448	506	5	0	0	0
1	F	342	2452	1549	419	479	5	0	0	0
1	G	353	2550	1617	434	494	5	0	0	0
1	H	359	2644	1673	455	511	5	0	0	0

There are 208 discrepancies between the modelled and reference sequences:

Chain	Residue	Modelled	Actual	Comment	Reference
A	0	MET	-	initiating methionine	UNP Q9HWU7
A	345	SER	-	expression tag	UNP Q9HWU7
A	346	ASP	-	expression tag	UNP Q9HWU7
A	347	ASN	-	expression tag	UNP Q9HWU7
A	348	LYS	-	expression tag	UNP Q9HWU7
A	349	VAL	-	expression tag	UNP Q9HWU7
A	350	ASP	-	expression tag	UNP Q9HWU7
A	351	GLY	-	expression tag	UNP Q9HWU7
A	352	ILE	-	expression tag	UNP Q9HWU7
A	353	VAL	-	expression tag	UNP Q9HWU7
A	354	ASN	-	expression tag	UNP Q9HWU7
A	355	PHE	-	expression tag	UNP Q9HWU7
A	356	SER	-	expression tag	UNP Q9HWU7

Continued on next page...

Continued from previous page...

Chain	Residue	Modelled	Actual	Comment	Reference
A	357	GLY	-	expression tag	UNP Q9HWU7
A	358	ASN	-	expression tag	UNP Q9HWU7
A	359	ILE	-	expression tag	UNP Q9HWU7
A	360	THR	-	expression tag	UNP Q9HWU7
A	361	GLU	-	expression tag	UNP Q9HWU7
A	362	LEU	-	expression tag	UNP Q9HWU7
A	363	GLU	-	expression tag	UNP Q9HWU7
A	364	HIS	-	expression tag	UNP Q9HWU7
A	365	HIS	-	expression tag	UNP Q9HWU7
A	366	HIS	-	expression tag	UNP Q9HWU7
A	367	HIS	-	expression tag	UNP Q9HWU7
A	368	HIS	-	expression tag	UNP Q9HWU7
A	369	HIS	-	expression tag	UNP Q9HWU7
B	0	MET	-	initiating methionine	UNP Q9HWU7
B	345	SER	-	expression tag	UNP Q9HWU7
B	346	ASP	-	expression tag	UNP Q9HWU7
B	347	ASN	-	expression tag	UNP Q9HWU7
B	348	LYS	-	expression tag	UNP Q9HWU7
B	349	VAL	-	expression tag	UNP Q9HWU7
B	350	ASP	-	expression tag	UNP Q9HWU7
B	351	GLY	-	expression tag	UNP Q9HWU7
B	352	ILE	-	expression tag	UNP Q9HWU7
B	353	VAL	-	expression tag	UNP Q9HWU7
B	354	ASN	-	expression tag	UNP Q9HWU7
B	355	PHE	-	expression tag	UNP Q9HWU7
B	356	SER	-	expression tag	UNP Q9HWU7
B	357	GLY	-	expression tag	UNP Q9HWU7
B	358	ASN	-	expression tag	UNP Q9HWU7
B	359	ILE	-	expression tag	UNP Q9HWU7
B	360	THR	-	expression tag	UNP Q9HWU7
B	361	GLU	-	expression tag	UNP Q9HWU7
B	362	LEU	-	expression tag	UNP Q9HWU7
B	363	GLU	-	expression tag	UNP Q9HWU7
B	364	HIS	-	expression tag	UNP Q9HWU7
B	365	HIS	-	expression tag	UNP Q9HWU7
B	366	HIS	-	expression tag	UNP Q9HWU7
B	367	HIS	-	expression tag	UNP Q9HWU7
B	368	HIS	-	expression tag	UNP Q9HWU7
B	369	HIS	-	expression tag	UNP Q9HWU7
C	0	MET	-	initiating methionine	UNP Q9HWU7
C	345	SER	-	expression tag	UNP Q9HWU7
C	346	ASP	-	expression tag	UNP Q9HWU7

Continued on next page...

Continued from previous page...

Chain	Residue	Modelled	Actual	Comment	Reference
C	347	ASN	-	expression tag	UNP Q9HWU7
C	348	LYS	-	expression tag	UNP Q9HWU7
C	349	VAL	-	expression tag	UNP Q9HWU7
C	350	ASP	-	expression tag	UNP Q9HWU7
C	351	GLY	-	expression tag	UNP Q9HWU7
C	352	ILE	-	expression tag	UNP Q9HWU7
C	353	VAL	-	expression tag	UNP Q9HWU7
C	354	ASN	-	expression tag	UNP Q9HWU7
C	355	PHE	-	expression tag	UNP Q9HWU7
C	356	SER	-	expression tag	UNP Q9HWU7
C	357	GLY	-	expression tag	UNP Q9HWU7
C	358	ASN	-	expression tag	UNP Q9HWU7
C	359	ILE	-	expression tag	UNP Q9HWU7
C	360	THR	-	expression tag	UNP Q9HWU7
C	361	GLU	-	expression tag	UNP Q9HWU7
C	362	LEU	-	expression tag	UNP Q9HWU7
C	363	GLU	-	expression tag	UNP Q9HWU7
C	364	HIS	-	expression tag	UNP Q9HWU7
C	365	HIS	-	expression tag	UNP Q9HWU7
C	366	HIS	-	expression tag	UNP Q9HWU7
C	367	HIS	-	expression tag	UNP Q9HWU7
C	368	HIS	-	expression tag	UNP Q9HWU7
C	369	HIS	-	expression tag	UNP Q9HWU7
D	0	MET	-	initiating methionine	UNP Q9HWU7
D	345	SER	-	expression tag	UNP Q9HWU7
D	346	ASP	-	expression tag	UNP Q9HWU7
D	347	ASN	-	expression tag	UNP Q9HWU7
D	348	LYS	-	expression tag	UNP Q9HWU7
D	349	VAL	-	expression tag	UNP Q9HWU7
D	350	ASP	-	expression tag	UNP Q9HWU7
D	351	GLY	-	expression tag	UNP Q9HWU7
D	352	ILE	-	expression tag	UNP Q9HWU7
D	353	VAL	-	expression tag	UNP Q9HWU7
D	354	ASN	-	expression tag	UNP Q9HWU7
D	355	PHE	-	expression tag	UNP Q9HWU7
D	356	SER	-	expression tag	UNP Q9HWU7
D	357	GLY	-	expression tag	UNP Q9HWU7
D	358	ASN	-	expression tag	UNP Q9HWU7
D	359	ILE	-	expression tag	UNP Q9HWU7
D	360	THR	-	expression tag	UNP Q9HWU7
D	361	GLU	-	expression tag	UNP Q9HWU7
D	362	LEU	-	expression tag	UNP Q9HWU7

Continued on next page...

Continued from previous page...

Chain	Residue	Modelled	Actual	Comment	Reference
D	363	GLU	-	expression tag	UNP Q9HWU7
D	364	HIS	-	expression tag	UNP Q9HWU7
D	365	HIS	-	expression tag	UNP Q9HWU7
D	366	HIS	-	expression tag	UNP Q9HWU7
D	367	HIS	-	expression tag	UNP Q9HWU7
D	368	HIS	-	expression tag	UNP Q9HWU7
D	369	HIS	-	expression tag	UNP Q9HWU7
E	0	MET	-	initiating methionine	UNP Q9HWU7
E	345	SER	-	expression tag	UNP Q9HWU7
E	346	ASP	-	expression tag	UNP Q9HWU7
E	347	ASN	-	expression tag	UNP Q9HWU7
E	348	LYS	-	expression tag	UNP Q9HWU7
E	349	VAL	-	expression tag	UNP Q9HWU7
E	350	ASP	-	expression tag	UNP Q9HWU7
E	351	GLY	-	expression tag	UNP Q9HWU7
E	352	ILE	-	expression tag	UNP Q9HWU7
E	353	VAL	-	expression tag	UNP Q9HWU7
E	354	ASN	-	expression tag	UNP Q9HWU7
E	355	PHE	-	expression tag	UNP Q9HWU7
E	356	SER	-	expression tag	UNP Q9HWU7
E	357	GLY	-	expression tag	UNP Q9HWU7
E	358	ASN	-	expression tag	UNP Q9HWU7
E	359	ILE	-	expression tag	UNP Q9HWU7
E	360	THR	-	expression tag	UNP Q9HWU7
E	361	GLU	-	expression tag	UNP Q9HWU7
E	362	LEU	-	expression tag	UNP Q9HWU7
E	363	GLU	-	expression tag	UNP Q9HWU7
E	364	HIS	-	expression tag	UNP Q9HWU7
E	365	HIS	-	expression tag	UNP Q9HWU7
E	366	HIS	-	expression tag	UNP Q9HWU7
E	367	HIS	-	expression tag	UNP Q9HWU7
E	368	HIS	-	expression tag	UNP Q9HWU7
E	369	HIS	-	expression tag	UNP Q9HWU7
F	0	MET	-	initiating methionine	UNP Q9HWU7
F	345	SER	-	expression tag	UNP Q9HWU7
F	346	ASP	-	expression tag	UNP Q9HWU7
F	347	ASN	-	expression tag	UNP Q9HWU7
F	348	LYS	-	expression tag	UNP Q9HWU7
F	349	VAL	-	expression tag	UNP Q9HWU7
F	350	ASP	-	expression tag	UNP Q9HWU7
F	351	GLY	-	expression tag	UNP Q9HWU7
F	352	ILE	-	expression tag	UNP Q9HWU7

Continued on next page...

Continued from previous page...

Chain	Residue	Modelled	Actual	Comment	Reference
F	353	VAL	-	expression tag	UNP Q9HWU7
F	354	ASN	-	expression tag	UNP Q9HWU7
F	355	PHE	-	expression tag	UNP Q9HWU7
F	356	SER	-	expression tag	UNP Q9HWU7
F	357	GLY	-	expression tag	UNP Q9HWU7
F	358	ASN	-	expression tag	UNP Q9HWU7
F	359	ILE	-	expression tag	UNP Q9HWU7
F	360	THR	-	expression tag	UNP Q9HWU7
F	361	GLU	-	expression tag	UNP Q9HWU7
F	362	LEU	-	expression tag	UNP Q9HWU7
F	363	GLU	-	expression tag	UNP Q9HWU7
F	364	HIS	-	expression tag	UNP Q9HWU7
F	365	HIS	-	expression tag	UNP Q9HWU7
F	366	HIS	-	expression tag	UNP Q9HWU7
F	367	HIS	-	expression tag	UNP Q9HWU7
F	368	HIS	-	expression tag	UNP Q9HWU7
F	369	HIS	-	expression tag	UNP Q9HWU7
G	0	MET	-	initiating methionine	UNP Q9HWU7
G	345	SER	-	expression tag	UNP Q9HWU7
G	346	ASP	-	expression tag	UNP Q9HWU7
G	347	ASN	-	expression tag	UNP Q9HWU7
G	348	LYS	-	expression tag	UNP Q9HWU7
G	349	VAL	-	expression tag	UNP Q9HWU7
G	350	ASP	-	expression tag	UNP Q9HWU7
G	351	GLY	-	expression tag	UNP Q9HWU7
G	352	ILE	-	expression tag	UNP Q9HWU7
G	353	VAL	-	expression tag	UNP Q9HWU7
G	354	ASN	-	expression tag	UNP Q9HWU7
G	355	PHE	-	expression tag	UNP Q9HWU7
G	356	SER	-	expression tag	UNP Q9HWU7
G	357	GLY	-	expression tag	UNP Q9HWU7
G	358	ASN	-	expression tag	UNP Q9HWU7
G	359	ILE	-	expression tag	UNP Q9HWU7
G	360	THR	-	expression tag	UNP Q9HWU7
G	361	GLU	-	expression tag	UNP Q9HWU7
G	362	LEU	-	expression tag	UNP Q9HWU7
G	363	GLU	-	expression tag	UNP Q9HWU7
G	364	HIS	-	expression tag	UNP Q9HWU7
G	365	HIS	-	expression tag	UNP Q9HWU7
G	366	HIS	-	expression tag	UNP Q9HWU7
G	367	HIS	-	expression tag	UNP Q9HWU7
G	368	HIS	-	expression tag	UNP Q9HWU7

Continued on next page...

Continued from previous page...

Chain	Residue	Modelled	Actual	Comment	Reference
G	369	HIS	-	expression tag	UNP Q9HWU7
H	0	MET	-	initiating methionine	UNP Q9HWU7
H	345	SER	-	expression tag	UNP Q9HWU7
H	346	ASP	-	expression tag	UNP Q9HWU7
H	347	ASN	-	expression tag	UNP Q9HWU7
H	348	LYS	-	expression tag	UNP Q9HWU7
H	349	VAL	-	expression tag	UNP Q9HWU7
H	350	ASP	-	expression tag	UNP Q9HWU7
H	351	GLY	-	expression tag	UNP Q9HWU7
H	352	ILE	-	expression tag	UNP Q9HWU7
H	353	VAL	-	expression tag	UNP Q9HWU7
H	354	ASN	-	expression tag	UNP Q9HWU7
H	355	PHE	-	expression tag	UNP Q9HWU7
H	356	SER	-	expression tag	UNP Q9HWU7
H	357	GLY	-	expression tag	UNP Q9HWU7
H	358	ASN	-	expression tag	UNP Q9HWU7
H	359	ILE	-	expression tag	UNP Q9HWU7
H	360	THR	-	expression tag	UNP Q9HWU7
H	361	GLU	-	expression tag	UNP Q9HWU7
H	362	LEU	-	expression tag	UNP Q9HWU7
H	363	GLU	-	expression tag	UNP Q9HWU7
H	364	HIS	-	expression tag	UNP Q9HWU7
H	365	HIS	-	expression tag	UNP Q9HWU7
H	366	HIS	-	expression tag	UNP Q9HWU7
H	367	HIS	-	expression tag	UNP Q9HWU7
H	368	HIS	-	expression tag	UNP Q9HWU7
H	369	HIS	-	expression tag	UNP Q9HWU7

- Molecule 2 is water.

Mol	Chain	Residues	Atoms		ZeroOcc	AltConf
			Total	O		
2	A	39	39	39	0	0
			Total	O		
2	B	62	62	62	0	0
			Total	O		
2	C	40	40	40	0	0
			Total	O		
2	D	68	68	68	0	0
			Total	O		
2	E	26	26	26	0	0
			Total	O		
2	F	13	13	13	0	0

Continued on next page...

Continued from previous page...

Mol	Chain	Residues	Atoms		ZeroOcc	AltConf
			Total	O		
2	G	9	9	9	0	0
			Total	O		
2	H	41	41	41	0	0

3 Residue-property plots (i)

These plots are drawn for all protein, RNA, DNA and oligosaccharide chains in the entry. The first graphic for a chain summarises the proportions of the various outlier classes displayed in the second graphic. The second graphic shows the sequence view annotated by issues in geometry and electron density. Residues are color-coded according to the number of geometric quality criteria for which they contain at least one outlier: green = 0, yellow = 1, orange = 2 and red = 3 or more. A red dot above a residue indicates a poor fit to the electron density (RSRZ > 2). Stretches of 2 or more consecutive residues without any outlier are shown as a green connector. Residues present in the sample, but not in the model, are shown in grey.

• Molecule 1: Fimbrial subunit CupB6

Chain A:

• Molecule 1: Fimbrial subunit CupB6

Chain B:

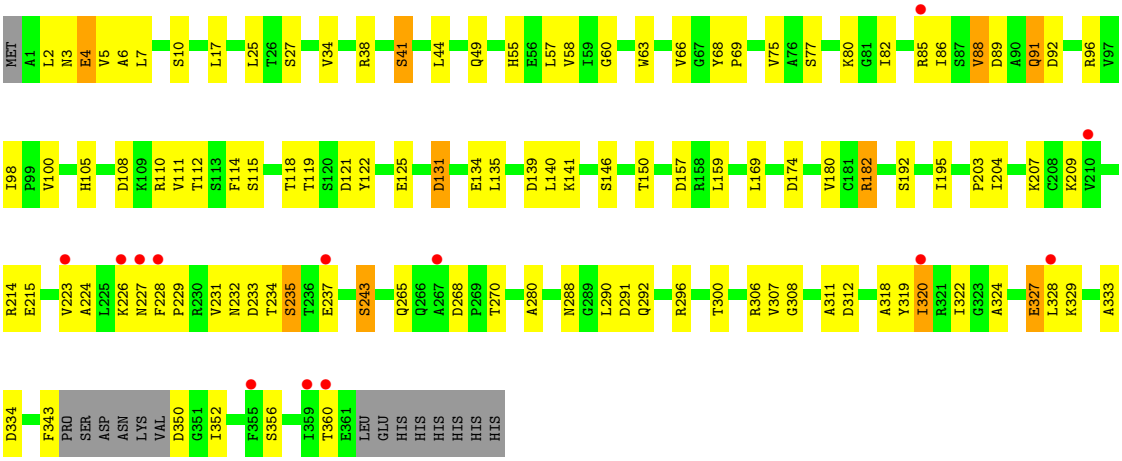

• Molecule 1: Fimbrial subunit CupB6

Chain C:

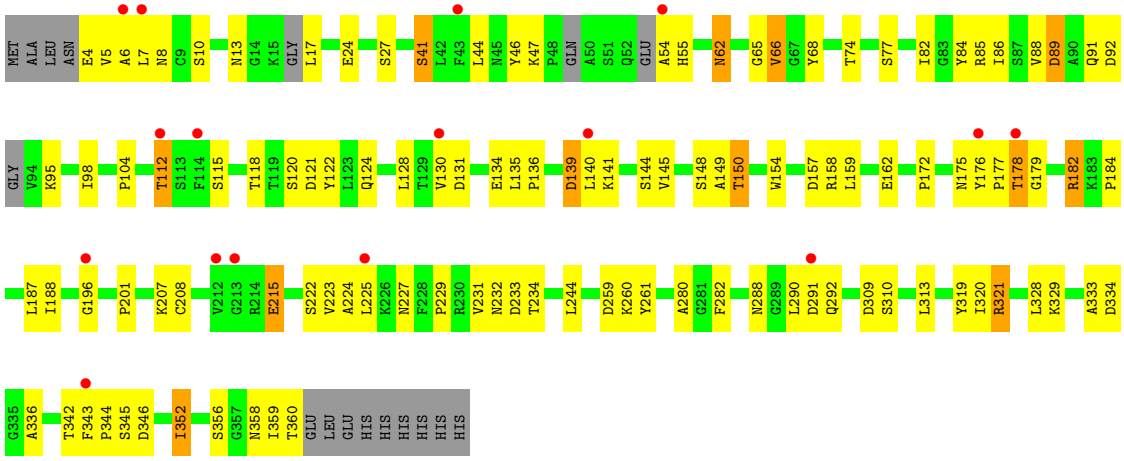

• Molecule 1: Fimbrial subunit CupB6

Chain D:

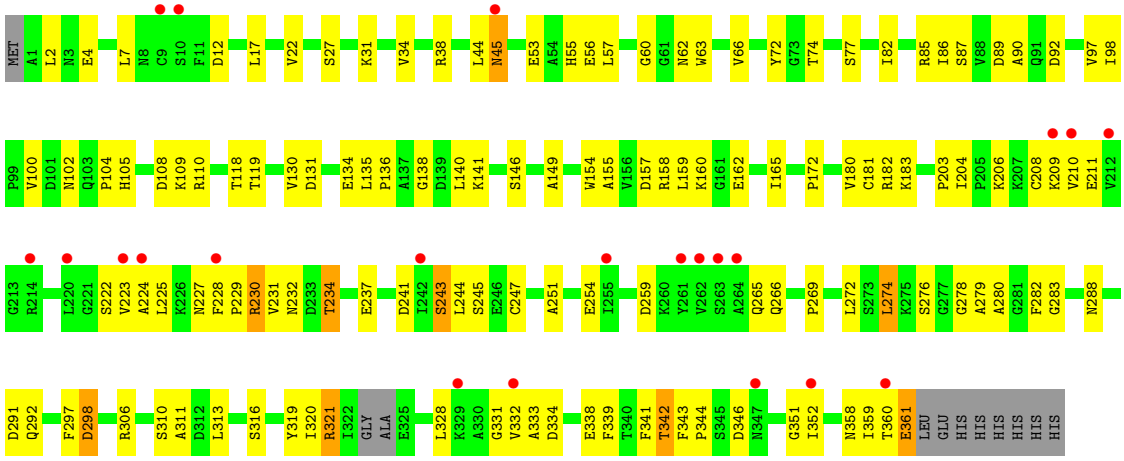

• Molecule 1: Fimbrial subunit CupB6

Chain E:

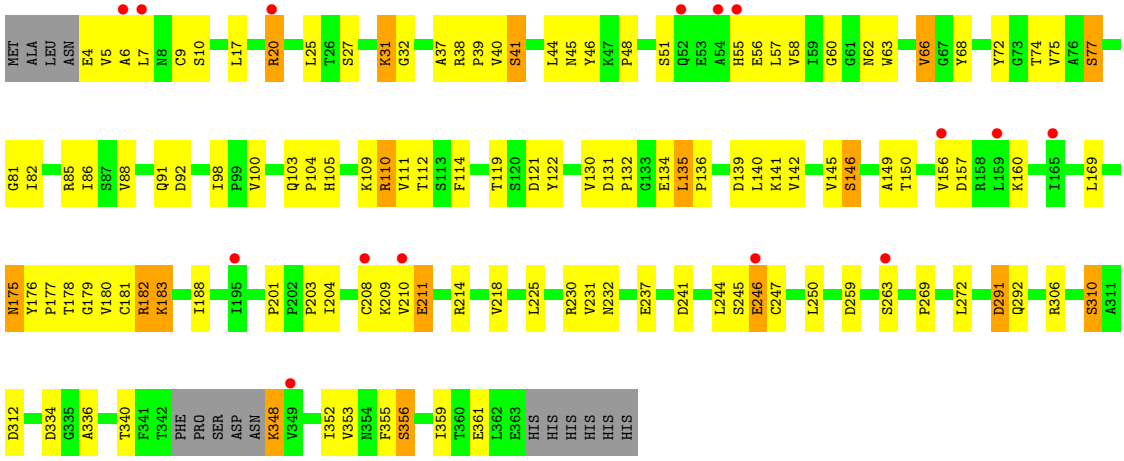

- Molecule 1: Fimbrial subunit CupB6

Chain F: 4% 54% 35% • 8%

MET ALA LEU N3 E4 V5 A6 L7 N8 C9 S10 N13 P18 W19 R20 V21 V22 N23 E24 L25 T26 S27 K31 F36 S41 L42 F43 L44 K47 E53 E56 I59 G60 G61 N62 W63 S64 G65 V66 Y72 V75 D78 I86 S87 V88 Q91

D92 I98 P99 V100 D101 N102 Q103 P104 H105 R110 V111 T112 T119 S120 D121 D131 P132 G133 E134 L135 P136 A137 G138 D139 L140 K141 V142 T143 S144 V145 A149 T150 W154 A155 V156 K160 S167 Y176 P177 T178 G179 V180 C181 R182 K183 I195 GLY G197 G198 P199

P200 P201 P202 P203 I204 P205 K206 K209 VAL GLU V212 T216 N217 V218 K219 L220 GLY S222 V223 A224 L225 K226 ASN F228 P229 R230 V231 N232 S235 T236 L244 C247 A248 A249 L250 R258 D259 K260 S263 A264 Q265 D268 P269 T270 I271 L272 S273 L274 K275 SER GLY G278

G283 I284 V285 V286 K287 N288 G289 L290 D291 R294 I295 R296 F297 R305 D309 S310 A311 D312 L313 P314 L315 S316 A317 A318 Y319 I320 R321 I322 GLY ALA GLU G326 E327 G331 V332 A333 ASP G335 A336 A337 E338 F339 T340 F341 T342 F343 PRO SER ASP ASN LYS VAL D350 G351

F355 S356 G357 N358 I359 T360 E361 LEU GLU HIS HIS HIS HIS HIS HIS

- Molecule 1: Fimbrial subunit CupB6

Chain G: 9% 58% 34% • 5%

MET A1 L2 N3 E4 V5 A6 L7 S10 G16 L17 V21 S27 F36 A37 R38 S41 L44 S51 E56 L57 V58 W63 V66 P71 Y72 G73 T74 D78 V79 I86 S87 V88 D89 D92 K95 R96 V97 I98 P99 V100 D101 N102

L107 D108 K109 R110 F114 T118 D121 Q124 L128 T129 V130 D131 E134 L135 G138 D139 L140 K141 V142 T143 S144 V145 S148 A149 T150 L151 D157 K160 I165 L169 D174 N175 Y176 P177 T178 G179 V180 C181 R182 I188 G197 P202 P203

K206 V210 E211 V212 G213 N217 V218 G221 S222 V223 A224 L225 K226 N227 F228 P229 R230 V231 N232 D233 T234 S235 T236 E237 D241 I242 S243 L244 C247 A251 I255 R258 D259 K260 D268 P269 T270 I271 L272 G277 G278 A279 F282 G283 N288 D291 Q292

I295 R296 F297 D298 R305 D309 S310 A311 D312 L313 S316 Y319 I320 R321 A324 E325 L328 K329 A330 GLY V332 A333 D334 GLY ALA A337 E338 F339 F343 P344 SER ASP ASN LYS V349 I352 V353 N354 F355 N358 I359 T360 GLU LEU GLU HIS HIS HIS HIS HIS

HIS

- Molecule 1: Fimbrial subunit CupB6

Chain H: 2% 75% 20% • •

MET A1 L2 N3 E4 V5 A6 L7 L17 P18 W19 S27 A37 R38 P39 V40 S41 L44 K47 S51 G52 E53 A54 H55 E56 L57 V58 V66 G67 Y68 T74 S77 I82 R85 I86 S87 V88 D89 I98 N102 D108 K109 R110 V111 T112

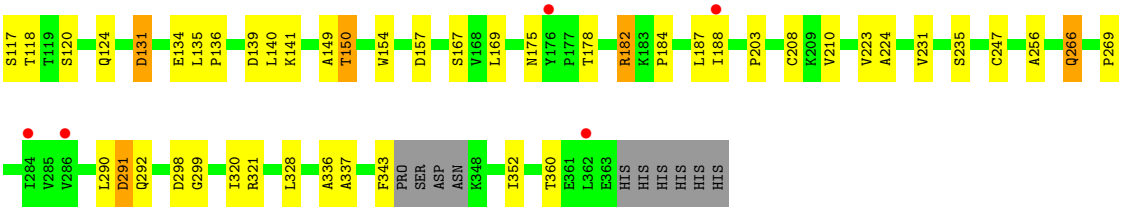
S117
T118
T119
S120
Q124
D131
E134
L135
P136
D139
L140
K141
A149
T150
W154
D157
S167
V168
L169
N175
Y176
P177
T178
R182
K183
P184
L187
I188
P203
C208
K209
V210
V223
A224
V231
S235
C247
A256
Q266
P269
I284
V285
V286
L290
D291
Q292
D298
G299
I320
R321
L328
A336
A337
F343
PRO
SER
ASP
ASN
K348
I352
T360
E361
L362
E363
HIS
HIS
HIS
HIS
HIS
HIS

4 Data and refinement statistics (i)

Property	Value	Source
Space group	C 1 2 1	Depositor
Cell constants a, b, c, α, β, γ	358.81Å 88.93Å 172.97Å 90.00° 112.94° 90.00°	Depositor
Resolution (Å)	97.29 – 2.77 97.28 – 2.77	Depositor EDS
% Data completeness (in resolution range)	96.2 (97.29-2.77) 96.2 (97.28-2.77)	Depositor EDS
R_{merge}	0.10	Depositor
R_{sym}	(Not available)	Depositor
$< I/\sigma(I) >$ [1]	1.89 (at 2.77Å)	Xtriage
Refinement program	REFMAC 5.8.0103	Depositor
R, R_{free}	0.238 , 0.266 0.233 , 0.262	Depositor DCC
R_{free} test set	6115 reflections (4.96%)	wwPDB-VP
Wilson B-factor (Å^2)	58.9	Xtriage
Anisotropy	0.029	Xtriage
Bulk solvent k_{sol}(e/Å^3), B_{sol}(Å^2)	0.33 , 51.7	EDS
L-test for twinning[2]	$< \|L\| > = 0.50$, $< L^2 > = 0.33$	Xtriage
Estimated twinning fraction	No twinning to report.	Xtriage
F_o,F_c correlation	0.92	EDS
Total number of atoms	20981	wwPDB-VP
Average B, all atoms (Å^2)	57.0	wwPDB-VP

Xtriage's analysis on translational NCS is as follows: *The largest off-origin peak in the Patterson function is 3.28% of the height of the origin peak. No significant pseudotranslation is detected.*

[1]Intensities estimated from amplitudes.

[2]Theoretical values of $< |L| >$, $< L^2 >$ for acentric reflections are 0.5, 0.333 respectively for untwinned datasets, and 0.375, 0.2 for perfectly twinned datasets.

5 Model quality (i)

5.1 Standard geometry (i)

The Z score for a bond length (or angle) is the number of standard deviations the observed value is removed from the expected value. A bond length (or angle) with $|Z| > 5$ is considered an outlier worth inspection. RMSZ is the root-mean-square of all Z scores of the bond lengths (or angles).

Mol	Chain	Bond lengths		Bond angles	
		RMSZ	$\#\|Z\| >5$	RMSZ	$\#\|Z\| >5$
1	A	0.66	0/2692	0.78	1/3671 (0.0%)
1	B	0.75	0/2661	0.85	4/3627 (0.1%)
1	C	0.74	1/2619 (0.0%)	0.84	2/3572 (0.1%)
1	D	0.73	0/2666	0.81	2/3640 (0.1%)
1	E	0.66	0/2654	0.79	2/3616 (0.1%)
1	F	0.67	0/2491	0.81	1/3396 (0.0%)
1	G	0.67	0/2603	0.82	2/3555 (0.1%)
1	H	0.66	0/2698	0.81	2/3673 (0.1%)
All	All	0.69	1/21084 (0.0%)	0.81	16/28750 (0.1%)

All (1) bond length outliers are listed below:

Mol	Chain	Res	Type	Atoms	Z	Observed(Å)	Ideal(Å)
1	C	215	GLU	CD-OE1	-5.89	1.19	1.25

The worst 5 of 16 bond angle outliers are listed below:

Mol	Chain	Res	Type	Atoms	Z	Observed(^{o})	Ideal(^{o})
1	B	96	ARG	NE-CZ-NH1	7.09	123.85	120.30
1	B	96	ARG	NE-CZ-NH2	-6.73	116.94	120.30
1	E	259	ASP	CB-CG-OD1	6.32	123.99	118.30
1	C	259	ASP	CB-CG-OD1	6.15	123.83	118.30
1	E	135	LEU	C-N-CD	5.34	139.62	128.40

There are no chirality outliers.

There are no planarity outliers.

5.2 Too-close contacts (i)

In the following table, the Non-H and H(model) columns list the number of non-hydrogen atoms and hydrogen atoms in the chain respectively. The H(added) column lists the number of hydrogen

atoms added and optimized by MolProbity. The Clashes column lists the number of clashes within the asymmetric unit, whereas Symm-Clashes lists symmetry-related clashes.

Mol	Chain	Non-H	H(model)	H(added)	Clashes	Symm-Clashes
1	A	2637	0	2592	103	0
1	B	2608	0	2565	104	0
1	C	2574	0	2501	142	0
1	D	2616	0	2548	164	0
1	E	2602	0	2573	109	0
1	F	2452	0	2334	141	0
1	G	2550	0	2482	157	0
1	H	2644	0	2628	61	0
2	A	39	0	0	1	0
2	B	62	0	0	2	0
2	C	40	0	0	1	0
2	D	68	0	0	0	0
2	E	26	0	0	2	0
2	F	13	0	0	1	0
2	G	9	0	0	0	0
2	H	41	0	0	0	0
All	All	20981	0	20223	957	0

The all-atom clashscore is defined as the number of clashes found per 1000 atoms (including hydrogen atoms). The all-atom clashscore for this structure is 23.

The worst 5 of 957 close contacts within the same asymmetric unit are listed below, sorted by their clash magnitude.

Atom-1	Atom-2	Interatomic distance (Å)	Clash overlap (Å)
1:G:228:PHE:CE2	1:G:282:PHE:HE1	1.21	1.57
1:G:325:GLU:HA	1:G:328:LEU:CD2	1.35	1.55
1:D:224:ALA:CA	1:D:360:THR:HB	1.11	1.54
1:G:279:ALA:CA	1:G:330:ALA:HB2	1.37	1.52
1:G:228:PHE:CE2	1:G:282:PHE:CE1	2.00	1.50

There are no symmetry-related clashes.

5.3 Torsion angles (i)

5.3.1 Protein backbone (i)

In the following table, the Percentiles column shows the percent Ramachandran outliers of the chain as a percentile score with respect to all X-ray entries followed by that with respect to entries of similar resolution.

The Analysed column shows the number of residues for which the backbone conformation was analysed, and the total number of residues.

Mol	Chain	Analysed	Favoured	Allowed	Outliers	Percentiles	
1	A	359/370 (97%)	349 (97%)	10 (3%)	0	100	100
1	B	351/370 (95%)	343 (98%)	8 (2%)	0	100	100
1	C	343/370 (93%)	339 (99%)	4 (1%)	0	100	100
1	D	355/370 (96%)	343 (97%)	12 (3%)	0	100	100
1	E	351/370 (95%)	348 (99%)	3 (1%)	0	100	100
1	F	324/370 (88%)	318 (98%)	6 (2%)	0	100	100
1	G	345/370 (93%)	341 (99%)	4 (1%)	0	100	100
1	H	355/370 (96%)	348 (98%)	7 (2%)	0	100	100
All	All	2783/2960 (94%)	2729 (98%)	54 (2%)	0	100	100

There are no Ramachandran outliers to report.

5.3.2 Protein sidechains (i)

In the following table, the Percentiles column shows the percent sidechain outliers of the chain as a percentile score with respect to all X-ray entries followed by that with respect to entries of similar resolution.

The Analysed column shows the number of residues for which the sidechain conformation was analysed, and the total number of residues.

Mol	Chain	Analysed	Rotameric	Outliers	Percentiles	
1	A	278/297 (94%)	260 (94%)	18 (6%)	17	41
1	B	274/297 (92%)	254 (93%)	20 (7%)	14	35
1	C	267/297 (90%)	247 (92%)	20 (8%)	13	34
1	D	272/297 (92%)	252 (93%)	20 (7%)	13	34
1	E	275/297 (93%)	251 (91%)	24 (9%)	10	27
1	F	249/297 (84%)	225 (90%)	24 (10%)	8	22
1	G	265/297 (89%)	243 (92%)	22 (8%)	11	29
1	H	280/297 (94%)	264 (94%)	16 (6%)	20	48
All	All	2160/2376 (91%)	1996 (92%)	164 (8%)	13	33

5 of 164 residues with a non-rotameric sidechain are listed below:

Mol	Chain	Res	Type
1	F	204	ILE
1	G	260	LYS
1	F	272	LEU
1	G	88	VAL
1	H	47	LYS

Sometimes sidechains can be flipped to improve hydrogen bonding and reduce clashes. 5 of 29 such sidechains are listed below:

Mol	Chain	Res	Type
1	D	91	GLN
1	G	292	GLN
1	E	49	GLN
1	G	55	HIS
1	D	175	ASN

5.3.3 RNA (i)

There are no RNA molecules in this entry.

5.4 Non-standard residues in protein, DNA, RNA chains (i)

There are no non-standard protein/DNA/RNA residues in this entry.

5.5 Carbohydrates (i)

There are no monosaccharides in this entry.

5.6 Ligand geometry (i)

There are no ligands in this entry.

5.7 Other polymers (i)

There are no such residues in this entry.

5.8 Polymer linkage issues (i)

There are no chain breaks in this entry.

6 Fit of model and data (i)

6.1 Protein, DNA and RNA chains (i)

In the following table, the column labelled '#RSRZ> 2' contains the number (and percentage) of RSRZ outliers, followed by percent RSRZ outliers for the chain as percentile scores relative to all X-ray entries and entries of similar resolution. The OWAB column contains the minimum, median, 95th percentile and maximum values of the occupancy-weighted average B-factor per residue. The column labelled 'Q< 0.9' lists the number of (and percentage) of residues with an average occupancy less than 0.9.

Mol	Chain	Analysed	<RSRZ>	#RSRZ>2			OWAB(Å^2)	Q<0.9
1	A	361/370 (97%)	0.46	8 (2%)	62	57	26, 50, 83, 129	0
1	B	355/370 (95%)	0.59	13 (3%)	41	36	26, 46, 79, 105	0
1	C	353/370 (95%)	0.57	16 (4%)	33	27	23, 55, 92, 109	0
1	D	359/370 (97%)	0.75	22 (6%)	21	16	18, 42, 98, 128	0
1	E	355/370 (95%)	0.50	15 (4%)	36	30	29, 56, 82, 102	0
1	F	342/370 (92%)	0.42	16 (4%)	31	25	28, 65, 102, 124	0
1	G	353/370 (95%)	0.69	32 (9%)	9	6	26, 69, 98, 117	0
1	H	359/370 (97%)	0.32	7 (1%)	66	63	34, 56, 83, 112	0
All	All	2837/2960 (95%)	0.54	129 (4%)	33	27	18, 56, 94, 129	0

The worst 5 of 129 RSRZ outliers are listed below:

Mol	Chain	Res	Type	RSRZ
1	G	359	ILE	6.3
1	C	176	TYR	5.4
1	G	330	ALA	4.8
1	D	262	VAL	4.7
1	A	178	THR	4.3

6.2 Non-standard residues in protein, DNA, RNA chains (i)

There are no non-standard protein/DNA/RNA residues in this entry.

6.3 Carbohydrates (i)

There are no monosaccharides in this entry.

6.4 Ligands (i)

There are no ligands in this entry.

6.5 Other polymers (i)

There are no such residues in this entry.