Full wwPDB X-ray Structure Validation Report (i)

Feb 11, 2024 – 12:53 AM EST

PDB ID	:	3B2R
Title	:	Crystal Structure of PDE5A1 catalytic domain in complex with Vardenafil
Authors	:	Huanchen, W.; Mengchun, Y.; Howard, R.; Sharron, H.F.; Hengming, K.
Deposited on	:	2007-10-19
Resolution	:	2.07 Å(reported)

This is a Full wwPDB X-ray Structure Validation Report for a publicly released PDB entry.

We welcome your comments at *validation@mail.wwpdb.org*
A user guide is available at
https://www.wwpdb.org/validation/2017/XrayValidationReportHelp
with specific help available everywhere you see the (i) symbol.

The types of validation reports are described at
http://www.wwpdb.org/validation/2017/FAQs#types.

The following versions of software and data (see references (i)) were used in the production of this report:

MolProbity	:	4.02b-467
Mogul	:	1.8.5 (274361), CSD as541be (2020)
Xtriage (Phenix)	:	1.13
EDS	:	2.36
buster-report	:	1.1.7 (2018)
Percentile statistics	:	20191225.v01 (using entries in the PDB archive December 25th 2019)
Refmac	:	5.8.0158
CCP4	:	7.0.044 (Gargrove)
Ideal geometry (proteins)	:	Engh & Huber (2001)
Ideal geometry (DNA, RNA)	:	Parkinson et al. (1996)
Validation Pipeline (wwPDB-VP)	:	2.36

1 Overall quality at a glance (i)

The following experimental techniques were used to determine the structure:
X-RAY DIFFRACTION

The reported resolution of this entry is 2.07 Å.

Percentile scores (ranging between 0-100) for global validation metrics of the entry are shown in the following graphic. The table shows the number of entries on which the scores are based.

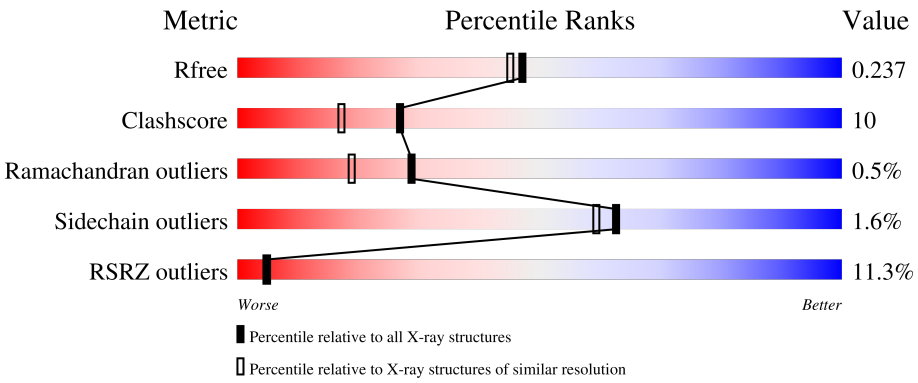

Metric	Whole archive (#Entries)	Similar resolution (#Entries, resolution range(Å))
R_{free}	130704	2684 (2.08-2.04)
Clashscore	141614	2801 (2.08-2.04)
Ramachandran outliers	138981	2768 (2.08-2.04)
Sidechain outliers	138945	2768 (2.08-2.04)
RSRZ outliers	127900	2646 (2.08-2.04)

The table below summarises the geometric issues observed across the polymeric chains and their fit to the electron density. The red, orange, yellow and green segments of the lower bar indicate the fraction of residues that contain outliers for >=3, 2, 1 and 0 types of geometric quality criteria respectively. A grey segment represents the fraction of residues that are not modelled. The numeric value for each fraction is indicated below the corresponding segment, with a dot representing fractions <=5% The upper red bar (where present) indicates the fraction of residues that have poor fit to the electron density. The numeric value is given above the bar.

Mol	Chain	Length	Quality of chain
1	A	330	6% 75% 15% • 10%
1	B	330	14% 65% 21% • 13%

2 Entry composition (i)

There are 3 unique types of molecules in this entry. The entry contains 4967 atoms, of which 0 are hydrogens and 0 are deuteriums.

In the tables below, the ZeroOcc column contains the number of atoms modelled with zero occupancy, the AltConf column contains the number of residues with at least one atom in alternate conformation and the Trace column contains the number of residues modelled with at most 2 atoms.

- Molecule 1 is a protein called cGMP-specific 3',5'-cyclic phosphodiesterase.

Mol	Chain	Residues	Atoms					ZeroOcc	AltConf	Trace
			Total	C	N	O	S			
1	A	297	2394	1526	414	436	18	0	0	0
1	B	287	2322	1485	402	418	17	0	0	0

There are 8 discrepancies between the modelled and reference sequences:

Chain	Residue	Modelled	Actual	Comment	Reference
A	531	GLY	-	expression tag	UNP O76074
A	532	SER	-	expression tag	UNP O76074
A	533	HIS	-	expression tag	UNP O76074
A	534	MET	-	expression tag	UNP O76074
B	531	GLY	-	expression tag	UNP O76074
B	532	SER	-	expression tag	UNP O76074
B	533	HIS	-	expression tag	UNP O76074
B	534	MET	-	expression tag	UNP O76074

- Molecule 2 is 2-{2-ETHOXY-5-[(4-ETHYLPIPERAZIN-1-YL)SULFONYL]PHENYL}-5-METHYL-7-PROPYLIMIDAZO[5,1-F][1,2,4]TRIAZIN-4(1H)-ONE (three-letter code: VDN) (formula: $C_{23}H_{32}N_6O_4S$).

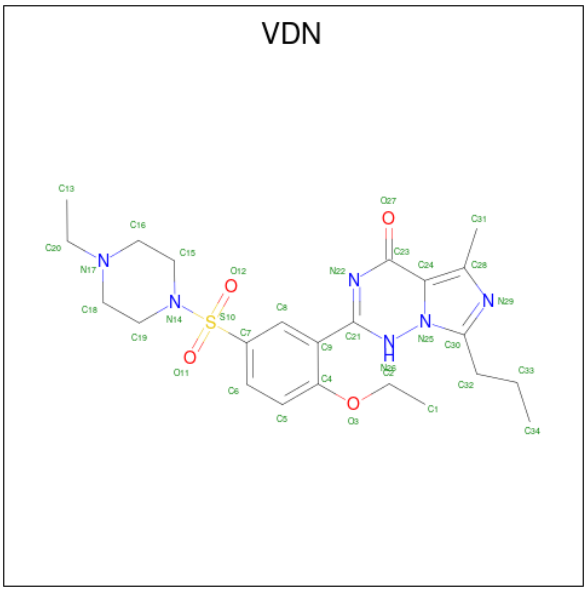

Mol	Chain	Residues	Atoms					ZeroOcc	AltConf
			Total	C	N	O	S		
2	A	1	34	23	6	4	1	0	0
			Total	C	N	O	S		
2	B	1	34	23	6	4	1	0	0

- Molecule 3 is water.

Mol	Chain	Residues	Atoms		ZeroOcc	AltConf
			Total	O		
3	A	116	116	116	0	0
			Total	O		
3	B	67	67	67	0	0

3 Residue-property plots (i)

These plots are drawn for all protein, RNA, DNA and oligosaccharide chains in the entry. The first graphic for a chain summarises the proportions of the various outlier classes displayed in the second graphic. The second graphic shows the sequence view annotated by issues in geometry and electron density. Residues are color-coded according to the number of geometric quality criteria for which they contain at least one outlier: green = 0, yellow = 1, orange = 2 and red = 3 or more. A red dot above a residue indicates a poor fit to the electron density (RSRZ > 2). Stretches of 2 or more consecutive residues without any outlier are shown as a green connector. Residues present in the sample, but not in the model, are shown in grey.

• Molecule 1: cGMP-specific 3',5'-cyclic phosphodiesterase

Chain A:

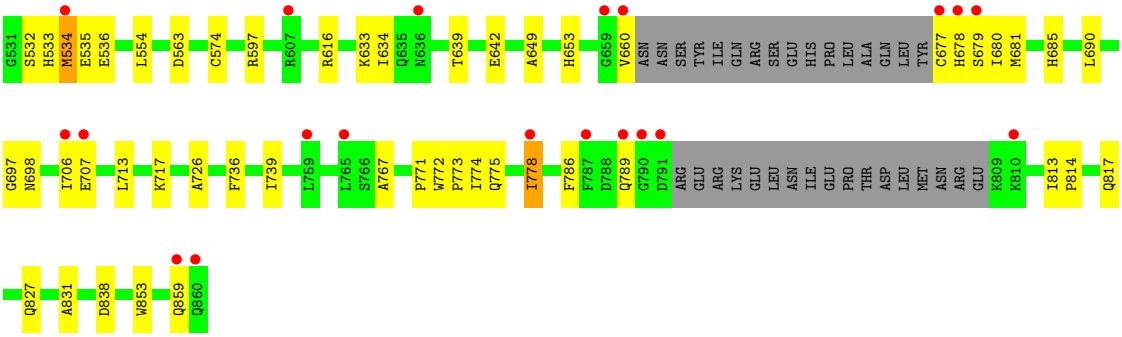

• Molecule 1: cGMP-specific 3',5'-cyclic phosphodiesterase

Chain B:

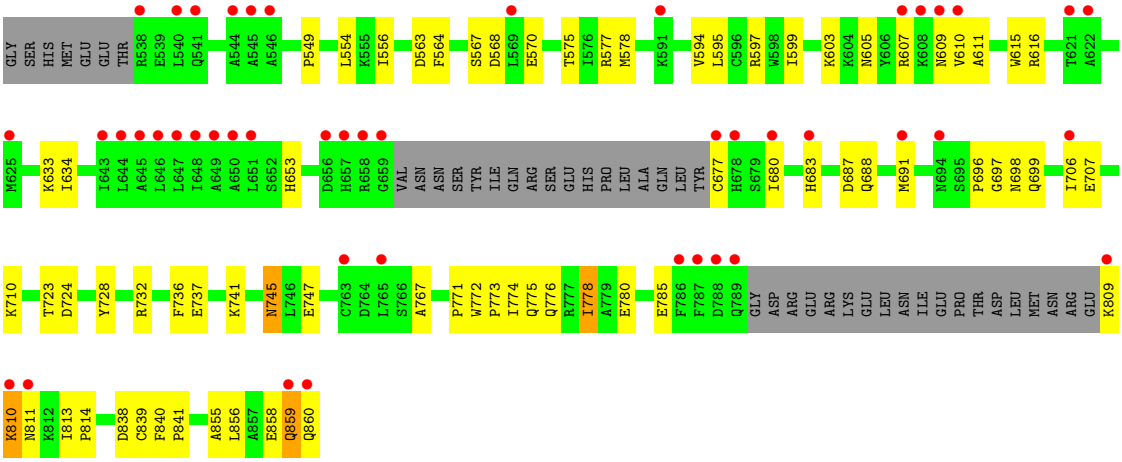

4 Data and refinement statistics (i)

Property	Value	Source
Space group	P 21 21 21	Depositor
Cell constants a, b, c, α, β, γ	68.92Å 87.82Å 138.47Å 90.00° 90.00° 90.00°	Depositor
Resolution (Å)	30.00 – 2.07 29.18 – 2.07	Depositor EDS
% Data completeness (in resolution range)	(Not available) (30.00-2.07) 87.6 (29.18-2.07)	Depositor EDS
R_{merge}	0.05	Depositor
R_{sym}	(Not available)	Depositor
$< I/\sigma(I) >$ [1]	3.80 (at 2.06Å)	Xtriage
Refinement program	CNS	Depositor
R, R_{free}	0.216 , 0.248 0.205 , 0.237	Depositor DCC
R_{free} test set	4765 reflections (10.07%)	wwPDB-VP
Wilson B-factor (Å^2)	31.4	Xtriage
Anisotropy	0.581	Xtriage
Bulk solvent k_{sol}(e/Å^3), B_{sol}(Å^2)	0.36 , 44.3	EDS
L-test for twinning[2]	$< \|L\| > = 0.49$, $< L^2 > = 0.32$	Xtriage
Estimated twinning fraction	No twinning to report.	Xtriage
F_o,F_c correlation	0.95	EDS
Total number of atoms	4967	wwPDB-VP
Average B, all atoms (Å^2)	43.0	wwPDB-VP

Xtriage's analysis on translational NCS is as follows: *The largest off-origin peak in the Patterson function is 4.25% of the height of the origin peak. No significant pseudotranslation is detected.*

[1]Intensities estimated from amplitudes.

[2]Theoretical values of $< |L| >$, $< L^2 >$ for acentric reflections are 0.5, 0.333 respectively for untwinned datasets, and 0.375, 0.2 for perfectly twinned datasets.

5 Model quality (i)

5.1 Standard geometry (i)

Bond lengths and bond angles in the following residue types are not validated in this section: VDN

The Z score for a bond length (or angle) is the number of standard deviations the observed value is removed from the expected value. A bond length (or angle) with $|Z| > 5$ is considered an outlier worth inspection. RMSZ is the root-mean-square of all Z scores of the bond lengths (or angles).

Mol	Chain	Bond lengths		Bond angles	
		RMSZ	$\#\|Z\|>5$	RMSZ	$\#\|Z\|>5$
1	A	0.35	0/2439	0.53	0/3287
1	B	0.32	0/2366	0.51	0/3189
All	All	0.34	0/4805	0.52	0/6476

There are no bond length outliers.

There are no bond angle outliers.

There are no chirality outliers.

There are no planarity outliers.

5.2 Too-close contacts (i)

In the following table, the Non-H and H(model) columns list the number of non-hydrogen atoms and hydrogen atoms in the chain respectively. The H(added) column lists the number of hydrogen atoms added and optimized by MolProbity. The Clashes column lists the number of clashes within the asymmetric unit, whereas Symm-Clashes lists symmetry-related clashes.

Mol	Chain	Non-H	H(model)	H(added)	Clashes	Symm-Clashes
1	A	2394	0	2404	38	0
1	B	2322	0	2345	59	0
2	A	34	0	32	1	0
2	B	34	0	32	1	0
3	A	116	0	0	1	0
3	B	67	0	0	1	0
All	All	4967	0	4813	98	0

The all-atom clashscore is defined as the number of clashes found per 1000 atoms (including hydrogen atoms). The all-atom clashscore for this structure is 10.

All (98) close contacts within the same asymmetric unit are listed below, sorted by their clash

magnitude.

Atom-1	Atom-2	Interatomic distance (Å)	Clash overlap (Å)
1:A:660:VAL:H	1:A:789:GLN:HE22	1.18	0.86
1:B:810:LYS:HD3	1:B:811:ASN:H	1.40	0.86
1:B:810:LYS:CD	1:B:811:ASN:H	1.93	0.82
1:B:767:ALA:HB1	1:B:778:ILE:HD12	1.65	0.79
1:A:597:ARG:HG2	1:A:698:ASN:OD1	1.83	0.78
1:B:696:PRO:HA	1:B:699:GLN:HE21	1.50	0.76
1:B:810:LYS:CG	1:B:811:ASN:H	1.99	0.74
1:B:728:TYR:CZ	1:B:732:ARG:HD3	2.22	0.74
1:A:677:CYS:O	1:A:680:ILE:HG12	1.93	0.69
1:B:607:ARG:HB3	1:B:609:ASN:OD1	1.94	0.68
1:B:810:LYS:HD3	1:B:811:ASN:N	2.07	0.68
1:B:855:ALA:HB1	1:B:860:GLN:OE1	1.93	0.67
1:A:660:VAL:N	1:A:789:GLN:HE22	1.88	0.67
1:A:767:ALA:HB1	1:A:778:ILE:HD12	1.76	0.67
1:B:774:ILE:O	1:B:778:ILE:HG12	1.96	0.66
1:A:677:CYS:HA	2:A:1:VDN:O11	1.95	0.65
1:B:809:LYS:O	1:B:814:PRO:HD3	1.98	0.64
1:B:696:PRO:HA	1:B:699:GLN:NE2	2.14	0.62
1:A:533:HIS:HB3	1:A:534:MET:CE	2.30	0.62
1:B:776:GLN:O	1:B:780:GLU:HG3	1.99	0.62
1:B:858:GLU:O	1:B:859:GLN:HB2	1.99	0.61
1:A:713:LEU:O	1:A:717:LYS:HG3	2.00	0.61
1:B:549:PRO:HG2	1:B:554:LEU:HD21	1.81	0.61
1:B:633:LYS:HD2	1:B:838:ASP:OD2	2.01	0.61
1:B:732:ARG:HD2	1:B:736:PHE:CE1	2.39	0.58
1:A:533:HIS:HB3	1:A:534:MET:HE3	1.86	0.57
1:A:813:ILE:HB	1:A:814:PRO:HD3	1.89	0.55
1:B:607:ARG:HB2	1:B:610:VAL:HG23	1.89	0.55
1:B:677:CYS:O	1:B:680:ILE:HG12	2.07	0.55
1:B:809:LYS:O	1:B:813:ILE:HB	2.06	0.54
1:B:745:ASN:ND2	1:B:747:GLU:H	2.05	0.54
1:A:660:VAL:H	1:A:789:GLN:NE2	1.97	0.53
1:A:597:ARG:HD2	1:A:697:GLY:O	2.07	0.53
1:A:563:ASP:OD2	1:A:616:ARG:HD2	2.09	0.52
1:A:772:TRP:HB3	1:A:773:PRO:HD3	1.91	0.52
1:B:728:TYR:O	1:B:732:ARG:HG3	2.10	0.51
1:B:611:ALA:HB3	1:B:785:GLU:HB2	1.93	0.51
1:A:739:ILE:HD12	1:A:831:ALA:HB1	1.94	0.50
1:B:575:THR:HA	1:B:578:MET:CE	2.42	0.50
1:A:677:CYS:C	1:A:679:SER:H	2.16	0.50
1:B:767:ALA:CB	1:B:778:ILE:HD12	2.40	0.50

Continued on next page...

Continued from previous page...

Atom-1	Atom-2	Interatomic distance (Å)	Clash overlap (Å)
1:B:605:ASN:HB3	1:B:688:GLN:NE2	2.27	0.49
1:B:810:LYS:CG	1:B:811:ASN:N	2.72	0.49
1:B:728:TYR:CE2	1:B:732:ARG:HD3	2.47	0.49
1:B:556:ILE:HD11	1:B:577:ARG:HG3	1.95	0.49
1:B:653:HIS:CD2	1:B:723:THR:HG21	2.48	0.49
1:A:532:SER:O	1:A:536:GLU:HG3	2.13	0.48
1:B:810:LYS:HB3	1:B:813:ILE:HG12	1.95	0.48
1:A:532:SER:OG	1:A:535:GLU:HG3	2.12	0.48
1:B:706:ILE:HG23	1:B:707:GLU:N	2.29	0.48
1:A:774:ILE:O	1:A:778:ILE:HG12	2.15	0.47
1:A:633:LYS:HD2	1:A:838:ASP:OD2	2.14	0.47
1:B:809:LYS:HD2	1:B:856:LEU:HD13	1.97	0.47
1:A:685:HIS:HA	3:A:919:HOH:O	2.14	0.47
1:B:737:GLU:OE1	1:B:741:LYS:HE3	2.14	0.47
1:B:810:LYS:HB3	1:B:813:ILE:CG1	2.44	0.46
1:A:649:ALA:O	1:A:653:HIS:HB3	2.15	0.46
1:A:736:PHE:CE1	1:A:827:GLN:HG2	2.50	0.46
1:A:533:HIS:HB3	1:A:534:MET:HE1	1.98	0.46
1:A:681:MET:HE1	1:A:726:ALA:HA	1.97	0.46
1:B:809:LYS:HD2	1:B:856:LEU:CD1	2.46	0.46
1:A:680:ILE:HG22	1:A:786:PHE:CZ	2.51	0.45
1:A:681:MET:HE3	1:A:726:ALA:HB2	1.99	0.45
1:A:677:CYS:C	1:A:679:SER:N	2.68	0.45
1:A:706:ILE:HG23	1:A:707:GLU:N	2.31	0.45
1:A:639:THR:OG1	1:A:642:GLU:HG3	2.18	0.44
1:B:603:LYS:HG3	1:B:615:TRP:CG	2.52	0.44
1:B:567:SER:OG	1:B:570:GLU:HG3	2.17	0.44
1:A:690:LEU:HD11	1:A:717:LYS:HE2	2.00	0.44
1:B:607:ARG:HG2	1:B:607:ARG:HH11	1.81	0.44
1:A:677:CYS:O	1:A:679:SER:N	2.51	0.44
1:B:683:HIS:CD2	1:B:724:ASP:OD2	2.71	0.44
1:A:634:ILE:HG22	1:A:634:ILE:O	2.17	0.43
1:B:745:ASN:HD21	1:B:747:GLU:HB3	1.83	0.43
1:B:860:GLN:HG3	3:B:900:HOH:O	2.17	0.43
1:B:564:PHE:HE2	1:B:774:ILE:HG23	1.83	0.43
1:A:771:PRO:HD2	1:A:774:ILE:HD12	1.99	0.43
1:B:575:THR:HA	1:B:578:MET:HE2	2.00	0.43
1:B:634:ILE:HD11	1:B:839:CYS:SG	2.58	0.43
1:A:739:ILE:CD1	1:A:831:ALA:HB1	2.49	0.42
1:B:745:ASN:C	1:B:745:ASN:HD22	2.21	0.42
1:B:772:TRP:HB3	1:B:773:PRO:HD3	2.02	0.42

Continued on next page...

Continued from previous page...

Atom-1	Atom-2	Interatomic distance (Å)	Clash overlap (Å)
2:B:1:VDN:H181	2:B:1:VDN:O12	2.19	0.42
1:A:817:GLN:HG3	1:A:853:TRP:CE2	2.55	0.42
1:B:810:LYS:HG2	1:B:811:ASN:H	1.83	0.42
1:B:597:ARG:HG2	1:B:698:ASN:OD1	2.19	0.42
1:B:687:ASP:O	1:B:691:MET:HG2	2.19	0.42
1:B:549:PRO:CG	1:B:554:LEU:HD21	2.49	0.42
1:B:771:PRO:HD2	1:B:774:ILE:HD12	2.02	0.41
1:B:840:PHE:N	1:B:841:PRO:CD	2.84	0.41
1:B:594:VAL:HG13	1:B:697:GLY:O	2.20	0.41
1:B:778:ILE:HG12	1:B:778:ILE:H	1.59	0.41
1:A:554:LEU:HD13	1:A:574:CYS:HA	2.02	0.41
1:B:563:ASP:OD2	1:B:616:ARG:HD2	2.21	0.41
1:B:706:ILE:O	1:B:710:LYS:HG3	2.21	0.41
1:B:595:LEU:O	1:B:599:ILE:HG13	2.21	0.40
1:A:767:ALA:CB	1:A:778:ILE:HD12	2.48	0.40
1:B:706:ILE:HG23	1:B:707:GLU:H	1.86	0.40

There are no symmetry-related clashes.

5.3 Torsion angles (i)

5.3.1 Protein backbone (i)

In the following table, the Percentiles column shows the percent Ramachandran outliers of the chain as a percentile score with respect to all X-ray entries followed by that with respect to entries of similar resolution.

The Analysed column shows the number of residues for which the backbone conformation was analysed, and the total number of residues.

Mol	Chain	Analysed	Favoured	Allowed	Outliers	Percentiles	
1	A	291/330 (88%)	283 (97%)	7 (2%)	1 (0%)	41	32
1	B	281/330 (85%)	265 (94%)	14 (5%)	2 (1%)	22	11
All	All	572/660 (87%)	548 (96%)	21 (4%)	3 (0%)	29	19

All (3) Ramachandran outliers are listed below:

Mol	Chain	Res	Type
1	B	810	LYS
1	B	859	GLN

Continued on next page...

Continued from previous page...

Mol	Chain	Res	Type
1	A	678	HIS

5.3.2 Protein sidechains (i)

In the following table, the Percentiles column shows the percent sidechain outliers of the chain as a percentile score with respect to all X-ray entries followed by that with respect to entries of similar resolution.

The Analysed column shows the number of residues for which the sidechain conformation was analysed, and the total number of residues.

Mol	Chain	Analysed	Rotameric	Outliers	Percentiles	
1	A	262/294 (89%)	258 (98%)	4 (2%)	65	62
1	B	254/294 (86%)	250 (98%)	4 (2%)	62	59
All	All	516/588 (88%)	508 (98%)	8 (2%)	62	59

All (8) residues with a non-rotameric sidechain are listed below:

Mol	Chain	Res	Type
1	A	534	MET
1	A	775	GLN
1	A	778	ILE
1	A	859	GLN
1	B	568	ASP
1	B	745	ASN
1	B	775	GLN
1	B	778	ILE

Sometimes sidechains can be flipped to improve hydrogen bonding and reduce clashes. All (24) such sidechains are listed below:

Mol	Chain	Res	Type
1	A	583	ASN
1	A	636	ASN
1	A	742	ASN
1	A	743	GLN
1	A	745	ASN
1	A	776	GLN
1	A	789	GLN
1	A	817	GLN
1	A	851	GLN

Continued on next page...

Continued from previous page...

Mol	Chain	Res	Type
1	A	854	GLN
1	A	859	GLN
1	B	583	ASN
1	B	586	GLN
1	B	589	GLN
1	B	636	ASN
1	B	683	HIS
1	B	699	GLN
1	B	718	GLN
1	B	743	GLN
1	B	745	ASN
1	B	776	GLN
1	B	834	HIS
1	B	851	GLN
1	B	854	GLN

5.3.3 RNA (i)

There are no RNA molecules in this entry.

5.4 Non-standard residues in protein, DNA, RNA chains (i)

There are no non-standard protein/DNA/RNA residues in this entry.

5.5 Carbohydrates (i)

There are no monosaccharides in this entry.

5.6 Ligand geometry (i)

2 ligands are modelled in this entry.

In the following table, the Counts columns list the number of bonds (or angles) for which Mogul statistics could be retrieved, the number of bonds (or angles) that are observed in the model and the number of bonds (or angles) that are defined in the Chemical Component Dictionary. The Link column lists molecule types, if any, to which the group is linked. The Z score for a bond length (or angle) is the number of standard deviations the observed value is removed from the expected value. A bond length (or angle) with $|Z| > 2$ is considered an outlier worth inspection. RMSZ is the root-mean-square of all Z scores of the bond lengths (or angles).

Mol	Type	Chain	Res	Link	Bond lengths			Bond angles		
					Counts	RMSZ	$\#\|Z\| > 2$	Counts	RMSZ	$\#\|Z\| > 2$
2	VDN	A	1	-	33,37,37	2.01	6 (18%)	33,54,54	2.60	11 (33%)
2	VDN	B	1	-	33,37,37	2.03	6 (18%)	33,54,54	2.60	11 (33%)

In the following table, the Chirals column lists the number of chiral outliers, the number of chiral centers analysed, the number of these observed in the model and the number defined in the Chemical Component Dictionary. Similar counts are reported in the Torsion and Rings columns. '-' means no outliers of that kind were identified.

Mol	Type	Chain	Res	Link	Chirals	Torsions	Rings
2	VDN	A	1	-	-	10/20/34/34	0/4/4/4
2	VDN	B	1	-	-	12/20/34/34	0/4/4/4

All (12) bond length outliers are listed below:

Mol	Chain	Res	Type	Atoms	Z	Observed(Å)	Ideal(Å)
2	B	1	VDN	O12-S10	6.24	1.50	1.43
2	B	1	VDN	O11-S10	6.22	1.50	1.43
2	A	1	VDN	O12-S10	6.14	1.50	1.43
2	A	1	VDN	O11-S10	6.14	1.50	1.43
2	A	1	VDN	C23-N22	4.19	1.40	1.33
2	B	1	VDN	C23-N22	4.16	1.40	1.33
2	B	1	VDN	C31-C28	3.96	1.53	1.50
2	A	1	VDN	C31-C28	3.86	1.53	1.50
2	A	1	VDN	C21-N22	2.72	1.40	1.35
2	B	1	VDN	C21-N22	2.71	1.40	1.35
2	B	1	VDN	C28-C24	-2.30	1.39	1.43
2	A	1	VDN	C28-C24	-2.28	1.39	1.43

All (22) bond angle outliers are listed below:

Mol	Chain	Res	Type	Atoms	Z	Observed(^{o})	Ideal(^{o})
2	B	1	VDN	C2-O3-C4	-6.81	110.85	118.01
2	B	1	VDN	O12-S10-O11	-6.51	108.97	119.52
2	A	1	VDN	O12-S10-O11	-6.16	109.53	119.52
2	A	1	VDN	C2-O3-C4	-6.11	111.59	118.01
2	A	1	VDN	C16-C15-N14	4.93	112.68	108.91
2	B	1	VDN	O12-S10-N14	4.86	111.12	106.69
2	A	1	VDN	O12-S10-N14	4.52	110.81	106.69
2	A	1	VDN	C24-C23-N22	-4.47	117.31	123.43
2	A	1	VDN	C18-C19-N14	4.39	112.27	108.91
2	B	1	VDN	C24-C23-N22	-4.38	117.44	123.43

Continued on next page...

Continued from previous page...

Mol	Chain	Res	Type	Atoms	Z	Observed(^{o})	Ideal(^{o})
2	B	1	VDN	C18-C19-N14	4.09	112.04	108.91
2	A	1	VDN	O11-S10-N14	3.86	110.21	106.69
2	B	1	VDN	O11-S10-N14	3.67	110.04	106.69
2	B	1	VDN	C19-N14-S10	-3.45	110.77	117.05
2	B	1	VDN	C16-C15-N14	3.43	111.54	108.91
2	A	1	VDN	C19-N14-S10	-3.17	111.29	117.05
2	A	1	VDN	C30-N29-C28	2.69	108.26	104.69
2	B	1	VDN	C30-N29-C28	2.62	108.16	104.69
2	B	1	VDN	C32-C30-N29	2.50	127.80	124.22
2	A	1	VDN	C32-C30-N29	2.42	127.68	124.22
2	B	1	VDN	C15-N14-S10	-2.23	113.00	117.05
2	A	1	VDN	C19-N14-C15	2.16	114.56	112.17

There are no chirality outliers.

All (22) torsion outliers are listed below:

Mol	Chain	Res	Type	Atoms
2	B	1	VDN	C15-N14-S10-O12
2	A	1	VDN	C15-N14-S10-C7
2	A	1	VDN	C15-N14-S10-O12
2	B	1	VDN	C15-N14-S10-C7
2	B	1	VDN	C6-C7-S10-N14
2	B	1	VDN	C13-C20-N17-C16
2	B	1	VDN	C13-C20-N17-C18
2	B	1	VDN	C8-C7-S10-N14
2	A	1	VDN	C6-C7-S10-N14
2	B	1	VDN	C6-C7-S10-O11
2	B	1	VDN	C8-C7-S10-O11
2	A	1	VDN	C6-C7-S10-O11
2	A	1	VDN	C8-C7-S10-O11
2	A	1	VDN	C8-C7-S10-N14
2	A	1	VDN	C15-N14-S10-O11
2	A	1	VDN	C19-N14-S10-O11
2	B	1	VDN	C5-C4-O3-C2
2	B	1	VDN	C9-C4-O3-C2
2	A	1	VDN	C5-C4-O3-C2
2	B	1	VDN	C19-N14-S10-O11
2	B	1	VDN	C15-N14-S10-O11
2	A	1	VDN	C9-C4-O3-C2

There are no ring outliers.

2 monomers are involved in 2 short contacts:

Mol	Chain	Res	Type	Clashes	Symm-Clashes
2	A	1	VDN	1	0
2	B	1	VDN	1	0

The following is a two-dimensional graphical depiction of Mogul quality analysis of bond lengths, bond angles, torsion angles, and ring geometry for all instances of the Ligand of Interest. In addition, ligands with molecular weight > 250 and outliers as shown on the validation Tables will also be included. For torsion angles, if less then 5% of the Mogul distribution of torsion angles is within 10 degrees of the torsion angle in question, then that torsion angle is considered an outlier. Any bond that is central to one or more torsion angles identified as an outlier by Mogul will be highlighted in the graph. For rings, the root-mean-square deviation (RMSD) between the ring in question and similar rings identified by Mogul is calculated over all ring torsion angles. If the average RMSD is greater than 60 degrees and the minimal RMSD between the ring in question and any Mogul-identified rings is also greater than 60 degrees, then that ring is considered an outlier. The outliers are highlighted in purple. The color gray indicates Mogul did not find sufficient equivalents in the CSD to analyse the geometry.

Ligand VDN A 1

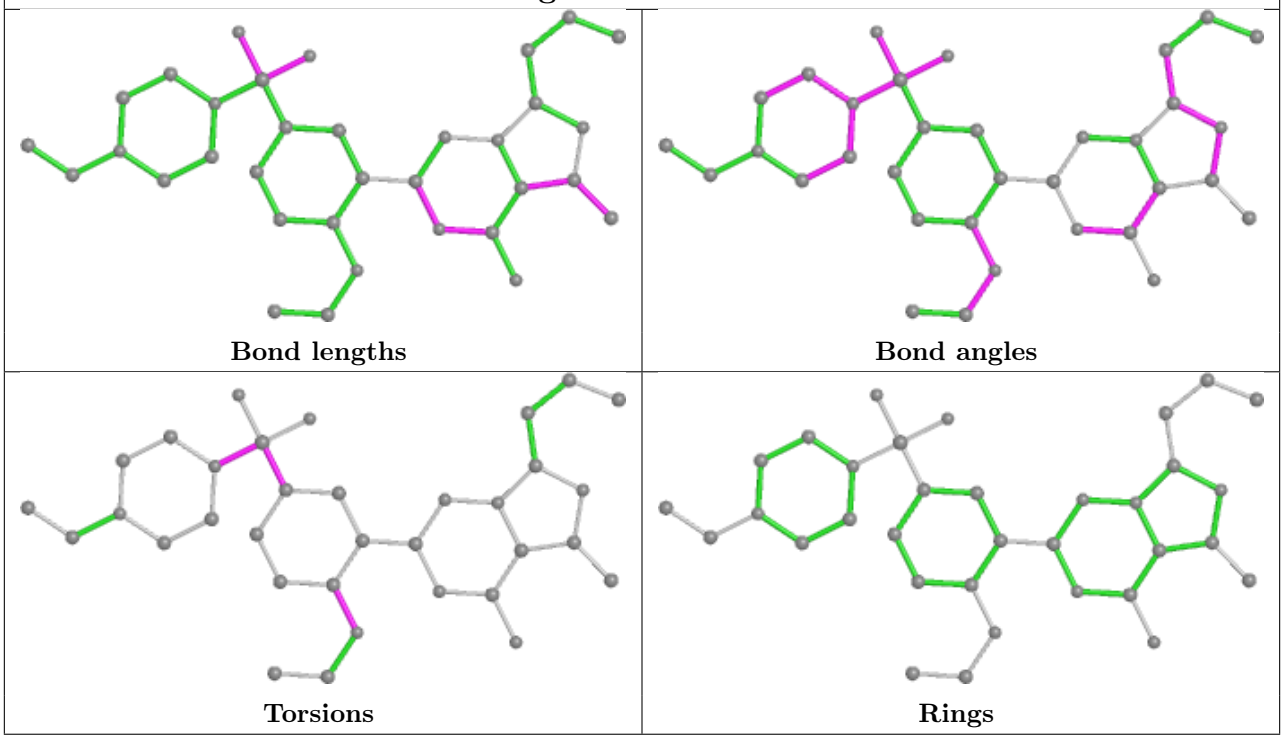

Ligand VDN B 1

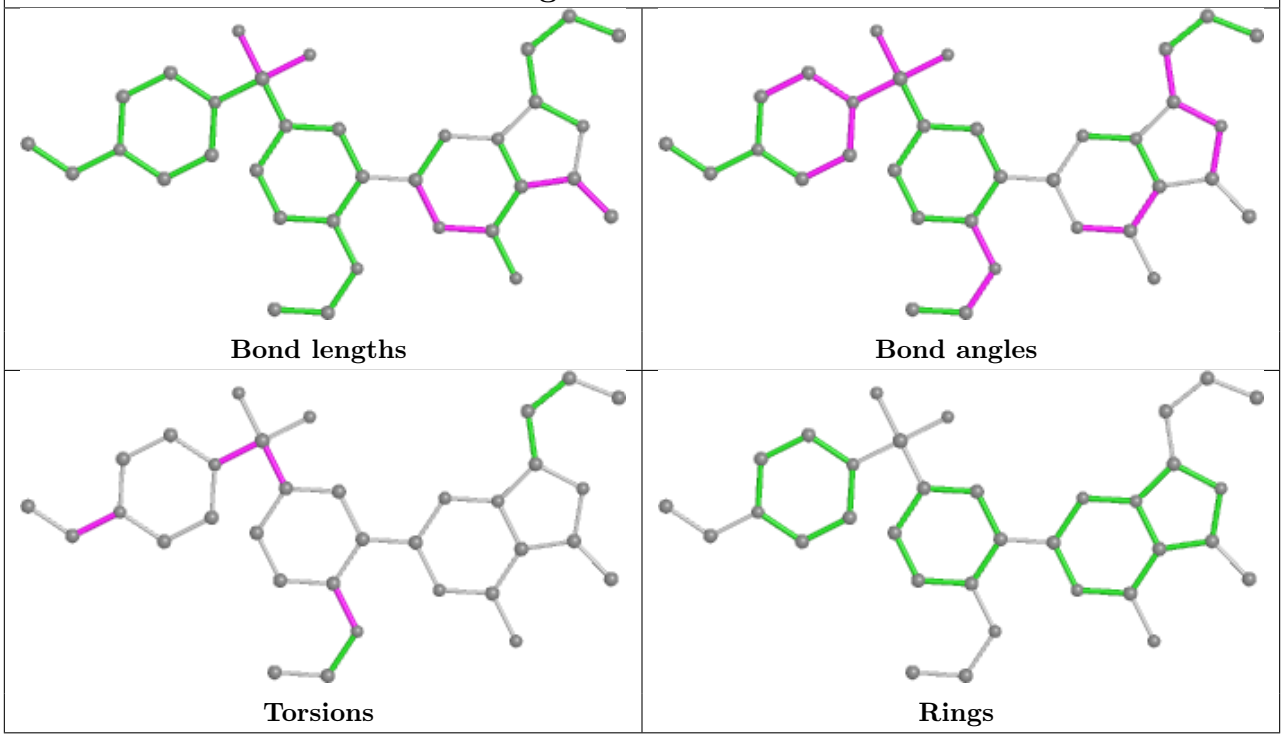

5.7 Other polymers (i)

There are no such residues in this entry.

5.8 Polymer linkage issues (i)

There are no chain breaks in this entry.

6 Fit of model and data (i)

6.1 Protein, DNA and RNA chains (i)

In the following table, the column labelled '#RSRZ> 2' contains the number (and percentage) of RSRZ outliers, followed by percent RSRZ outliers for the chain as percentile scores relative to all X-ray entries and entries of similar resolution. The OWAB column contains the minimum, median, 95th percentile and maximum values of the occupancy-weighted average B-factor per residue. The column labelled 'Q< 0.9' lists the number of (and percentage) of residues with an average occupancy less than 0.9.

Mol	Chain	Analysed	<RSRZ>	#RSRZ>2			OWAB(Å^2)	Q<0.9
1	A	297/330 (90%)	0.29	20 (6%)	17	18	25, 36, 59, 84	0
1	B	287/330 (86%)	0.85	46 (16%)	1	1	27, 42, 80, 103	0
All	All	584/660 (88%)	0.56	66 (11%)	5	5	25, 38, 72, 103	0

All (66) RSRZ outliers are listed below:

Mol	Chain	Res	Type	RSRZ
1	B	659	GLY	9.2
1	B	860	GLN	8.9
1	B	677	CYS	8.8
1	B	658	ARG	8.3
1	B	789	GLN	7.5
1	A	860	GLN	7.1
1	B	787	PHE	7.0
1	B	545	ALA	6.8
1	B	541	GLN	5.9
1	B	538	ARG	5.7
1	B	809	LYS	5.6
1	B	678	HIS	5.3
1	B	786	PHE	4.8
1	B	810	LYS	4.6
1	B	608	LYS	4.5
1	A	534	MET	4.5
1	B	788	ASP	4.5
1	A	706	ILE	4.5
1	B	691	MET	4.2
1	B	540	LEU	4.1
1	A	659	GLY	4.1
1	B	648	ILE	4.0
1	B	656	ASP	4.0
1	B	683	HIS	3.9

Continued on next page...

Continued from previous page...

Mol	Chain	Res	Type	RSRZ
1	B	647	LEU	3.8
1	A	790	GLY	3.8
1	B	811	ASN	3.7
1	A	660	VAL	3.7
1	B	651	LEU	3.5
1	B	609	ASN	3.4
1	A	678	HIS	3.3
1	B	706	ILE	3.1
1	B	649	ALA	3.1
1	A	810	LYS	3.0
1	B	657	HIS	2.9
1	B	859	GLN	2.8
1	B	607	ARG	2.8
1	A	859	GLN	2.8
1	A	787	PHE	2.7
1	B	622	ALA	2.7
1	B	610	VAL	2.7
1	B	544	ALA	2.7
1	B	569	LEU	2.6
1	A	789	GLN	2.6
1	B	763	CYS	2.6
1	B	625	MET	2.5
1	B	644	LEU	2.5
1	B	546	ALA	2.5
1	A	791	ASP	2.5
1	A	677	CYS	2.4
1	B	621	THR	2.3
1	B	643	ILE	2.3
1	B	650	ALA	2.2
1	A	707	GLU	2.2
1	A	636	ASN	2.2
1	A	759	LEU	2.1
1	B	694	ASN	2.1
1	B	765	LEU	2.1
1	B	645	ALA	2.1
1	B	680	ILE	2.1
1	A	765	LEU	2.1
1	A	778	ILE	2.0
1	A	607	ARG	2.0
1	B	591	LYS	2.0
1	B	646	LEU	2.0
1	A	679	SER	2.0

6.2 Non-standard residues in protein, DNA, RNA chains (i)

There are no non-standard protein/DNA/RNA residues in this entry.

6.3 Carbohydrates (i)

There are no monosaccharides in this entry.

6.4 Ligands (i)

In the following table, the Atoms column lists the number of modelled atoms in the group and the number defined in the chemical component dictionary. The B-factors column lists the minimum, median, 95th percentile and maximum values of B factors of atoms in the group. The column labelled 'Q< 0.9' lists the number of atoms with occupancy less than 0.9.

Mol	Type	Chain	Res	Atoms	RSCC	RSR	B-factors(Å^2)	Q<0.9
2	VDN	A	1	34/34	0.96	0.13	27,31,37,42	0
2	VDN	B	1	34/34	0.97	0.12	31,38,46,49	0

The following is a graphical depiction of the model fit to experimental electron density of all instances of the Ligand of Interest. In addition, ligands with molecular weight > 250 and outliers as shown on the geometry validation Tables will also be included. Each fit is shown from different orientation to approximate a three-dimensional view.

Electron density around VDN A 1:

$2mF_o$-DF_c (at 0.7 rmsd) in gray
mF_o-DF_c (at 3 rmsd) in purple (negative)
and green (positive)

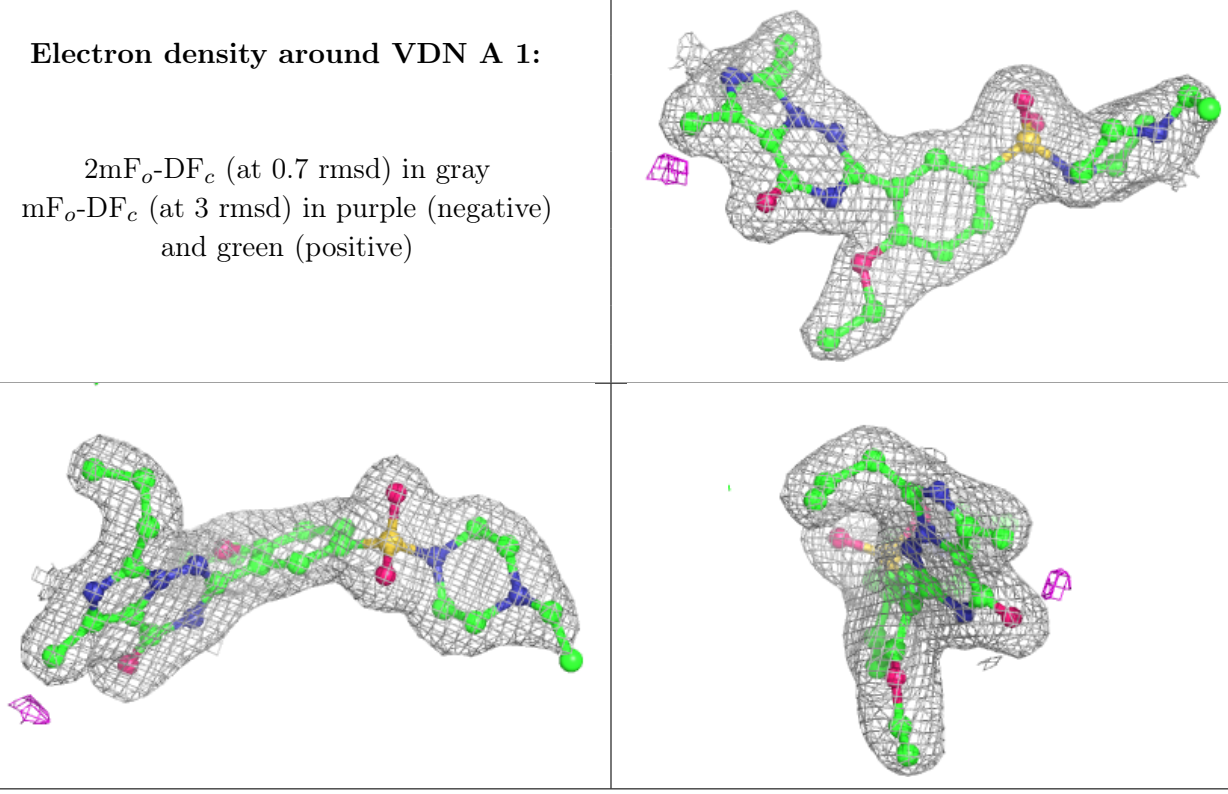

Electron density around VDN B 1:

$2mF_o$-DF_c (at 0.7 rmsd) in gray
mF_o-DF_c (at 3 rmsd) in purple (negative)
and green (positive)

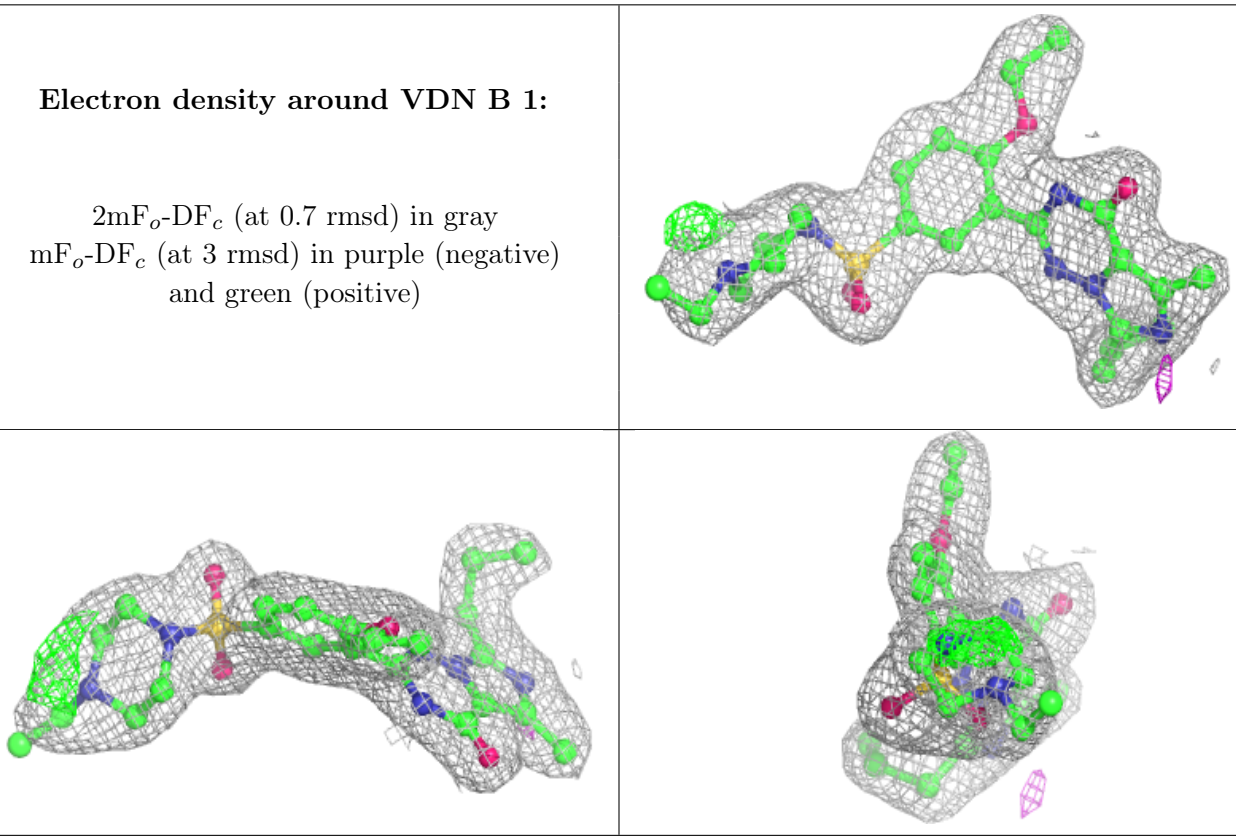

6.5 Other polymers (i)

There are no such residues in this entry.